CONTRACT NO.
14-12-0001-30135

DEVELOPMENT OF AN ENGINEERING AND COST ANALYSIS OF A SHIP-MOUNTED SUBSURFACE COLLECTOR SYSTEM

FINAL REPORT

VOLUME I OF 2

DECEMBER 2, 1985

UNITED STATES DEPARTMENT OF THE INTERIOR
MINERALS MANAGEMENT SERVICE

TECHNOLOGY ASSESSMENT & RESEARCH PROGRAM
12203 SUNRISE VALLEY DRIVE, MAIL STOP 647
RESTON, VIRGINIA 22091

BROWN & ROOT DEVELOPMENT, INC.
P.O. BOX 1051 HOUSTON, TEXAS 77251

ENGINEERING AND COST ANALYSIS OF A SHIP-MOUNTED SUBSURFACE COLLECTOR SYSTEM

CONTRACT NO. 14-12-0001-30135

FINAL REPORT IN 2 VOLUMES

EXECUTIVE SUMMARY

This study, authorized by the Department of the Interior through the Minerals Management Service Contract No. 14-12-0001-30135, conducts a technical and cost analysis of a ship-mounted subsurface collector system. The concept of the system and its applicability in a practical environment are discussed.

The system comprises of a converted crude oil tanker with the following basic components:

- a moonpool with a turret mooring system
- a dynamic positioning system
- a dual cone subsurface collector
- a dual flexible riser system
- an onboard separation and gas flaring system
- fire fighting, inerting and safety systems

The system is self-contained, mobile and does not require additional support over and above the equipment that is normally available in the area where the requirement may be created.

The study concludes that such a system is viable within today's technology and can be put to practical application. Most of the major components for such a system are available and have been field tested in various offshore oil and gas procedures and applications. Whereas the use of such a system may present some risks during the implementation phase at each application, with proper training, planning and safety measures, these risks are not significantly higher than those encountered in normal deepwater and harsh environment exploratory drilling or construction procedures.

Ideally, a collector system of this type is most efficient for site specific application, however, the conceptual design discussed is applicable to a broad variety of blowout scenarios within the parameters given. Its basis is extendable to a larger range of water depth, sea-state and effluent content applications. Major factors limiting the system's application to varying sites are; collector size, riser sizes, water depths of less than 100 ft. and thruster system horsepower required to maintain the system on station.

Cold water gravity settling is the primary method recommended for separation of the mixture collected. Recovered gas is disposed by flaring.

The total capital cost for a ship-mounted subsurface collection system is estimated to be $58,784,000 (1985 dollars). In a comparison of the collection costs between the subsurface collection system studied and surface collection systems it was determined that the former is highly sensitive to the collector efficiency which in turn is most directly impacted by the collector/blowout orgin source position relationship. The latter is however sensitive to a combination of volume of liquid treated and duration of the collection operation. It is concluded that if a 55% collection efficiency is attainable using the subsurface collector system, the order of collection and treatment cost are similar to those of surface collection techniques. Significantly higher collection efficiencies for the subsurface system, in the range of 80 to 90%, appear achievable and offer additional cost advantages as well as minimizing the impact of the untreated effluent on the environment.

Further research, testing and development appears necessary to colloborate the estimates of system efficiencies and optimizing the subsurface collection concepts.

ENGINEERING AND COST ANALYSIS
OF A SHIP-MOUNTED SUBSURFACE
COLLECTOR SYSTEM
CONTRACT NO. 14-12-0001-30135
BARDI PROJECT NO. XC-0030
VOLUME 1 OF 2

TABLE OF CONTENTS

SECTION	TITLE	PAGE
EXECUTIVE SUMMARY		
1.0	INTRODUCTION	
	1.1 Contract Basis	1-1
	1.2 Background Information	1-2
	1.3 Scope of Work	1-4
	1.4 Areas of Concern	1-7
2.0	LITERATURE REVIEW (TASK 1)	
	2.5 Conclusions of Review	2-1
	2.5.1 General Observations/Findings	2-1
	2.5.2 Status of Technology	2-3
3.0	SYSTEM DEVELOPMENT ANALYSIS (TASK 2A)	
	3.1 System Parameters	3.1-1
	3.1.1 Basis of Parameters	3.1-1
	3.1.2 Flow Rates and the Collection Efficiency	3.1-3
	3.2 Description of Collection Tanker and Support Vessels	3.2-1
	3.2.1 Conversion Requirements	3.2-1
	3.2.2 Safety System Considerations	3.2-5

SECTION	TITLE		PAGE
	3.2.3	Ship Service Systems	3.2-13
	3.2.4	System Descriptions/Specifications	3.2-15
	3.2.5	Special Features	3.2-18
3.3	Subsurface Collector		3.3-1
	3.3.1	The Basic Requirements	3.3-1
	3.3.2	Functional and Configurational Requirements	3.3-1
	3.3.3	Collector Configuration Development	3.3-3
3.4	Collector Riser		3.4-1
	3.4.1	Review of Requirements	3.4-1
	3.4.2	Define Configuration	3.4-2
	3.4.3	System Hardware Descriptions	3.4-10
3.5	Ship-Mounted Process System		3.5-1
	3.5.1	Oil/Water/Gas Study	3.5-1
	3.5.2	Interim Production	3.5-8
	3.5.3	Corrosion and Erosion	3.5-9
	3.5.4	Foaming	3.5-10
	3.5.5	Contingency/Failure	3.5-11
	3.5.6	Dispersant	3.5-12
	3.5.7	Maintenance	3.5-12
3.6	Operations Analysis		3.6-1
	3.6.1	Introduction	3.6-1
	3.6.2	Anchor Handing Scenarios	3.6-1
	3.6.3	Station Keeping Analysis	3.6-6
	3.6.4	Operating Steps and Procedures	3.6-16
	3.6.5	Blowout Response Scenario	3.6-18
	3.6.6	System Operation & Maintenance	3.6-32
	3.6.7	Contingency Plans	3.6-34

SECTION	TITLE		PAGE
	3.6.8	Methods and Equipment for Locating the Well-Bore and Positioning the Collection	3.6-35
	3.7	System Evaluation	3.7-1
	3.7.1	Concept Practicality and Workability	3.7-1
	3.7.2	Effectiveness	3.7-1
	3.7.3	System Integration	3.7-2
	3.7.4	Operational Elements	3.7-2
	3.7.5	Limitations	3.7-2
	3.7.6	New vs. Existing Systems	3.7-2
	3.7.7	Optional Features	3.7-2
4.0	SYSTEM COST ANALYSIS (TASK 2B)		4-1
	4.1	Existing Collection Systems	4-1
	4.1.1	Surface Collection Cost Basis	4-1
	4.1.2	Surface Collection Systems	4-3
	4.1.3	Surface Dispersant Application	4-5
	4.1.4	Shoreline Cleanup	4-5
	4.1.5	Conclusions	4-5
	4.2	Ship-Mounted Subsurface Collector System	4-6
	4.2.1	Costs for Representative Tankers	4-6
	4.2.2	Costs for Typical Tanker Conversation	4-7
	4.2.3	Cost of Ship Mounted Process System	4-8
	4.2.4	Costs for Chemicals for Emulsion	4-9
	4.2.5	Cost and Water Treatment of Subsurface Collector Estimate	4-9
	4.2.6	Cost of Collection Riser	4-13
	4.2.7	Qualifications	4-14
	4.2.8	Total Capital Cost of Ship-Mounted Subsurface Collector System	4-14
	4.2.9	Operating Cost	4-15

SECTION	TITLE	PAGE
	4.2.10 Net Cost of Ship-Mounted Subsurface Collector System	4-19
	4.3 COST COMPARISON	4-20
	4.3.1 Surface Collection Costs Summary	4-20
	4.3.2 Subsurface Collection Costs Summary	4-21
	4.3.3 Cost Comparison	4-21
5.0	SUMMARY OF RESULTS	5-1
	5.1 Conclusions	5-1
	5.2 Future Technology Development	5-6

REFERENCES

APPENDICES

A.1 Detailed List of Work Breakdown Structure

A.2 Tables and Calculations

A.3 Patents and Studies

A.4 Vendor Literature

TABLE OF ILLUSTRATIONS

FIGURE/TABLE	TITLE
TABLE 2.5-1	TANKER BASED FLOATING PRODUCTION SYSTEMS
2.5-2	FLOATING PRODUCTION SYSTEM
2.5-3	FLOATING PRODUCTION SYSTEM
2.5-4	FLOATING PRODUCTION SYSTEM
2.5-5	FLOATING PRODUCTION SYSTEM
3.1-1	ENTRAINED WATER VS COLLECTOR HEIGHT TOPHAM ET AL [29]
3.1-2	ENTRAINED WATER VS COLLECTOR HEIGHT TOPHAM ET AL [29]
3.1-3	COLLECTION EFFICIENCIES VS WATER DEPTH AND COLLECTOR HEIGHT MILGRAM [8]
3.1-4	MINIMUM FROUDE NUMBER VS COLLECTION EFFICIENCY MILGRAM [8]
3.1-5	FROUDE NUMBER AND PHASE RATIO VS COLLECTION HEIGHT AND WATER DEPTH MILGRAM [8]
3.1-6	CHANGES IN FROUDE NO. AND PHASE RATIO σ CHANGES IN COLLECTION EFFICIENCY MILGRAM [8]
3.1-7	VARIATIONS IN Q_T, F', R' and P σ CHANGES IN WATER DEPTH MILGRAM [8]
3.1-8	PLUME RADIUS VS COLLECTION HEIGHT AND WATER DEPTH ROWE AND TOPHAM [30]
3.1-9	WELLHEAD FROUDE NO. VS WATER DEPTH AND WELLHEAD DIAMETER ROWE AND ROPHAM [30]

FIGURE/TABLE	TITLE
3.1-10	FLOW RATES VS COLLECTOR HEIGHT FOR VARYING α, λ, d. ROWE AND TOPHAM [30]
3.1-11	GAS FLOW RATE VS GOR AND WATER DEPTH
3.1-12	CRITICAL AND BACK PRESSURES VS WATER OIL RATIOS TOPHAM ET AL [29]
3.1-13	COLLECTION EFFICIENCY CALCULATIONS BY DR. MILGRAM
3.2-1	SUBSEA COLLECTOR VESSEL PLAN VIEW AND PROFILE
3.2-2	SECTION THROUGH TURRET
3.2-3	PLAN AT TOP OF TURRET SHOWING MOORING WINCH LOCATIONS
3.2-4	RISER HANDLING ARRANGEMENT PLAN AT MAIN DECK
3.2-5	RISER HANDLING ARRANGEMENT SECTION THROUGH GANTRY
3.3-1	SUBSURFACE COLLECTOR
3.3-2	MEAN VERTICAL FORCE FROM PLUME ON COLLECTOR
TABLE 3.4-1	RISER LIFT RATES, MMBPD
3.4-2	EQUATIONS FOR COMPUTING LIQUID FLOW IN RISER
3.4-3	FLEXIBLE PIPE RISER
3.4-4	RISER-TO-PROCESS EQUIPMENT CONNECTION SCHEME
3.5-1	PROCESS SCHEMATIC

FIGURE/TABLE	TITLE
TABLE 3.6-1	ENVIRONMENTAL CRITERIA - REGULAR WAVES
TABLE 3.6-1A	ENVIRONMENTAL CRITERIA - SWELLS
3.6-2	ANCHOR DEPLOYMENT PROCEDURE
TABLE 3.6-3	SYSTEM LOADS
3.6-4	MOORING SYSTEM ABANDONMENT PROCEDURE
TABLE 3.6-5	WIND SPEED VS. SEA HEIGHT AND WAVE HEIGHT VS. WAVE PERIOD
3.6-6	CUUMULATIVE PROBABILITY FOR ANNUAL WIND SPEED
TABLE 3.6-7	WIND SPEED
3.6-8	CUMULATIVE PROBABILITY FOR ANNUAL WAVE HEIGHT
TABLE 3.6-9	WAVE RESPONSES
TABLE 3.6-10	DRIFTING FORCE COEFFICIENTS
3.6-11	SIGN CONVENTION AND COORDINATE SYSTEM
TABLE 3.6-12	COEFFS OF WIND AND CURRENT LOADS FROM OCIMF REPORT
3.6-13	LONGITUDINAL CURRENT FORCE COEFFICIENT FOR WATER DEPTH TO DRAFT RATIOS OF 3.0-6.0 Cx_c
3.6-14	LATERAL CURRENT FORCE COEFFICIENT Cy_c
3.6-15	CURRENT YAW MOMENT COEFFICIENT Cxy_c
3.6-16	CURRENT FORCE IN LONGITUDINAL DIRECTION VS ANGLE OF ATTACK AT B-9
3.6-17	CURRENT FORCE IN LATERAL DIRECTION VS ANGLE OF ATTACK AT B-9
3.6-18	CURRENT MOMENT VS ANGLE OF ATTACK AT B-9
3.6-19	LONGITUDINAL WIND FORCE COEFFICIENT Cx
3.6-20	LATERAL WIND FORCE COEFFICIENT Cy_w
3.6-21	WIND YAW MOMENT COEFFICIENT Cxy_w
3.6-22	WIND FORCE IN LONGITUDINAL DIRECTION VS ANGLE OF ATTACK AT B-9

FIGURE/TABLE	TITLE
3.6-23	WIND FORCE IN LATERAL DIRECTION VS ANGLE OF ATTACK AT B-9
3.6-24	WIND MOMENT VS ANGLE OF ATTACK AT B-9
3.6-25	TOTAL ENVIRONMENTAL LOADS IN LONGITUDINAL DIRECTION AT B-9
3.6-26	TOTAL ENVIRONMENTAL LOADS IN LATERAL DIRECTION AT B-9
3.6-27	TOTAL ENVIRONMENTAL YAW MOMENT AT B-9
3.6-28	THE TURRET ARRANGEMENT
TABLE 3.6-29	ANCHOR CONSIDERATIONS
3.6-30	THRUSTER SYSTEM LOCATION
3.6-31	THRUST VS INLET VELOCITY
3.6-32	THRUST AND POWER VS CRANK ANGLE
3.6-33	POWER-THRUST CURVE FOR 3000 HP UNITS - BOLLARD PULL-MAX THRUST, 41.5 METRIC TONNES
3.6-34	VESSEL AND MOONPOOL MOTION CHARACTERISTICS
3.6-35	VESSEL MOORING CABLE TENSIONS
3.6-36	ENVIRONMENTAL FORCES ACTING ON VESSEL
3.6-37	COLLECTOR DEPLOYMENT SCENARIO-1
3.6-38	COLLECTOR DEPLOYMENT SCENARIO-2
3.6-39	COLLECTOR DEPLOYMENT
3.6-40	COLLECTOR DEPLOYMENT
3.6-41	DEBRIS REMOVAL-1
3.6-42	DEBRIS REMOVAL-2
3.6-43	COLLECTOR INSTALLATION
3.6-44	COLLECTOR INSTALLATION
3.6-45	ESTABLISHING LOCAL LBS GRID
3.6-46	COLLECTOR POSITIONING WITH ANCHOR WINCHING ALGORITHMS
3.6-47	TYPICAL POSITION-REFERENCE DISPLAY (GRID COORDINATES)

FIGURE/TABLE	TITLE
3.6-48	GRID-REFERENCE DISPLAY FOR ALIGNMENT OF ROV WITH WELLHEAD
3.6-49	ROV TRACKING DISPLAY - LONG - BASELINE METHOD
3.6-50	SIMULTANEOUS DEPLOYMENT AND POSITION DATA
3.6-51	TYPICAL SONAR SEARCH AND DISPLAY MODES
TABLE 4.2-1	REPRESENTATIVE LIST OF USED TANKERS FOR SALE OR SOLD
TABLE 4.2-2	OPERATING COSTS
4.2-3	UNIT COST OF SUBSURFACE COLLECTION SYSTEM
TABLE 4.3-1	COST COMPARISON
5.1-1	SHIP-MOUNTED SUBSURFACE COLLECTOR SYSTEM - CONCEPTUAL CONFIGURATION

Tab 1.0

SECTION 1.0
INTRODUCTION
FINAL REPORT
SHIP-MOUNTED SUBSURFACE
COLLECTOR SYSTEM
CONTRACT NO. 14-12-0001-30135

1.0 INTRODUCTION

1.1 Contract Basis

The contract basis authorizing the execution of the scope of work associated with this engineering and cost analysis report is:

Contract No. 14-12-0001-30135
Requisition Nos. 4-6481-0008 & 6481-3002

Issued by:

U. S. Department of the Interior
Minerals Management Service
12203 Sunrise Valley Drive, MS 635
Reston, Virginia 22091

Administered by:

Mr. Carroll D. Day
Contracting Officer (CO)
Telephone (703) 435-6415
Address same as above

Mr. Edward J. Tennyson
Contracting Officer's Technical Representative (COTR)
Telephone (703) 860-7865
Address same as above (except tnat MS 647 instead of MS 635)

Contractor:

Brown & Root Development, Inc.
P. O. Box 1051
Houston, Texas 77251
Elmer H. Bomke - President
Telephone (713) 863-1224

H. T. Djie - Sponsoring Department Manager
Telephone (713) 676-4025

E. Earl Peebles - Program Manager
Telephone (713) 676-3211
A. N. Lal Srivastav - Principal Investigator
Telepone (713) 676-7890

1.2 Background Information

The basis for this report initiated with the Minerals Management Service issuing a solicitation for proposals for this work as a part of its continuing technology assessment program to provide its managers with quantitative information on a broad range of aspects of the offshore oil and gas activities. Tne following background information has been extracted from Section C-1 of that solicitation.

As oil and gas activities move into deeper and more distant waters, the continued use of conventional oilspill recovery equipment requires further evaluation and analysis. These new frontier areas of proposed operations indicate that the concept of a large self-contained collection ship capable of deploying a subsea collector over a blowing gas and oil well, remaining on station, disposing of large quantities of collected gas and storing recovered oil, is particularly attractive. Botn the costs and effectiveness of such a system must be quantified and then compared with existing oilspill cleanup technologies.

When a subsea well blows out, usually large quantities of gas and oil are released. One concept for subsurface collection of the oil is to install a riser above the blowing well with a conical inlet attached to the bottom of the riser. The gas establishes gas lift pumping in the riser and large quantities of gas, oil, and water are pumped to the surface. The references show that a high percentage of the blownout oil can be collected if the riser has a sufficiently large diameter and

if the inlet is sufficiently close to the top of the blowing wellhead. Smaller riser diameters require smaller distances from wellhead to collector. The larger the diameter of the riser, the greater the volume of water collected.

Large quantities of gas, water, and oil are delivered at the top of the riser. An effective, complete system requires separation of these three materials with burning of the gas, discharge of the water to the sea, and either storage and then transport of the oil to shore or burning of the oil. Separation of the gas is the simplest part and flaring of the gas at the top of a tall stack can be done by conventional oilfield technology. Separation of the oil from the water is dominated by the large quantities which must be handled. Anticipated systems will collect on the order of one million barrels of water per day with the amount of oil depending on the amount delivered by the blownout well. Gravity separation is the only practical way to deal with such large quantities. This fact, coupled with the requirement for oil storage capacity, make a large tanker ship the vehicle of choice on which to base a subsurface collection system. The ship's tanks can serve as gravity separation pools with pumping used to discharge separated water and to move the oil to other tanks used for storage. Systems for collecting up to 30,000 barrels of oil per day are anticipated so that at least 60,000 tons of storage capacity will be needed to hold 2 weeks of collected oil. Offloading operations might be scheduled once every 10 days so that 2 weeks of storage capacity is a reasonable basis to set the required tanker size. Some of the tanker space will be required for special ship systems which will include a moonpool for riser entry, riser handling equipment, dynamic positioning systems, and special fireproofing systems. Thus, the size of ship which might be converted to a subsurface collection system is about 100,000 tons.

A special necessary feature for a collection system ship is the ability to enter a surface fire. Often, following a subsurface blowout, the gas bubbling through the water surface is burning; sometimes unintentionally and sometimes intentionally to reduce risks of gas poisoning and explosion. It is anticipated that the collection equipment would pass through a moonpool in the forward part of the ship so that initially, this part of the ship would often have to pass into a fire zone. Complete fireproofing and inerting and water spray cooling would be required. Once the subsurface collection system was operating properly, the fire would go out, but this could take several days from the time the operations are first begun.

The references describe feasibility studies for a such fire entering subsurface collection ship. The conclusion is that the system is feasible, and Lloyds has indicated that classification standards for such vessels could be drawn up in a workable way.

The intent of this report is to establish an information base for comparison of the costs and effectiveness of the subsurface system to conventional surface oilspill containment and cleanup technology.

1.3 Scope of Work

The content of this report provides the engineering and a cost analysis of the development of a ship-mounted subsurface collector system. Based upon the specifications contained in Section 3.1 of this report, tables have been prepared showing the liquid flow rates and the predicted volume of oil to be collected for a various number of combinations of riser diameters, water depths, lifts, and distances between wellhead and collector.

The tasks which were completed in order to provide the required engineering and cost analysis of the development of a

ship-mounted subsurface collector system are as follows. These tasks are in accordance with the Program Scheduling Plan incorporated into the Contract at time of contract award:

Task 1 - Review of Existing Literature and Data

This task required the synthesis of existing information including, but not limited to, the references in Enclosure 1 of the Contract. The Contractor has been responsible for obtaining all references used in this synthesis effort.

Upon completion of Task 1 and prior to initiating Task 2, the Contractor met with the Contracting Officer's Representative (COR) in MMS, Reston, Virginia and presented a briefing on the results obtained during the completion of Task 1. These results are presented in Section 2.0 of this report.

Task 2 - Engineering and Cost Analysis of Subsurface Collector System

The engineering analysis of the development of a practical and workable subsurface collection system in accordance with the requirements set forth herein and acceptable ocean engineering practices has been performed. The subsurface collection ship as described herein is capable of dealing with blowouts on the scale described under blowout conditions in Section 3.1 of this report. The system is also capable of initial installation of all subsystems and operations in sea and wind conditions generated by a Beaufort 6 scale environment. This ship is defined to be capable of entering a fire resulting from burning of up to 765,000 standard cubic meters per day of blownout gas, lowering and installing the collector system including needed bottom mooring of the collector inlet, and dynamically maintaining position during collection operations and offloading

of collected oil to another ship. The vessel is defined to be capable of collection operations in combined sea and wind states near the top of force 9 on the Beaufort scale. The preliminary design includes means for unhooking the ship from the system in winds up to 60 knots and associated sea conditions with the unhooking and abandonment operations requiring 8 hours or less. All parts of the abandoned system are defined for survival capability in winds up to 100 knots and associated sea conditions. Reattachment to abandoned systems if any, is provided for conditions associated with Beaufort 6.

The vessel design provides for separation and flaring of collected gas, gravity separation of the oil and water, discharge of separated water overboard, and storage of all collected oil during at least 2 weeks of collection. The values of the amount of oil likely to occur in the overboard waterstream have been estimated without chemical treatment of the water to remove oil. The values for the amount of oil likely to remain in the overboard waterstream discharge have not been determined because at present it is unknown as to what quantitative levels are acceptable. Based upon the information in the references for a single collector system and the riser flow rate tables developed in this report, collection efficiencies have been calculated for parameter combinations. Although the original design parameters are based on a single collector system, the conceptual calculated design in this report is to be for a double collector and double riser system, of the type described in Sections 3.3 and 3.4 to improve efficiency.

A cost analysis for construction has been prepared based upon conversion of an existing tanker as described in Section 3.2. The cost analysis in Section 4.2 includes a range of ship purchase costs based upon available tankers. The cost analysis

also includes all costs for constructing the completed system broken down by each subsystem and the associated unit operating costs for each subsystem is also included. Other than the cost for tanker acquisition, capital costs are not included in these rates.

The cost analysis has developed the costs for separating the recovered oil both with and without chemical treatment. Similarly, costs are determined both with and without chemical treatment of the continuous oil phase for breaking tight emulsions.

This task also included the compilation of costs and configurations for applicable existing equipment and identification and engineering concept development for needed equipment which is not commercially available. Applicable procedures for entering the surface flare, maintaining station, abandonment, lightering, fire suppression, etc., were also developed and described.

The cost analyses, preliminary sketches, descriptions, and specifications were submitted to MMS first in draft and then in final report form. A briefing of the details of the design and costs of producing the entire system was held at MMS headquarters (Reston, Virginia) on August 23, 1985.

1.4 Areas of Concern

The following areas of concern have been addressed during the performance of the work. Following each identified area of concern listed below, the respective primary reference location is given where discussion is presented in text of the report.

1. Maximum weather conditions for safe operations including (See Table 3.6.1):
   a. Rigging and emplacement of the collector.

b. Continuous operation including offloading/lightering operations.

c. Abandonment criteria.

2. Fire suppression equipment for:

a. Surface flare suppression and extinguishing (See Section 3.2.2.8).

b. Cooling of ships' hull and superstructure (See Section 3.2.2.4).

c. Ensuring against ignition from ship board apparatus (See Section 3.2.2.9).

3. Propulsion requirements and apparatus for station keeping (See Section 3.6.3):

a. Typical meteorological and oceanographic conditions.

b. Lateral surface currents induced by the blowout.

4. Collector configuration and specification (See Section 3.3).

5. Riser specifications including (See Section 3.4):

a. Slip joint configuration and fabrication.

b. Coupling equipment, tensioning, rotational and vibration capabilities.

c. Buoyancy corrosion, hydrate, wax, foam, emulsion capabilities.

d. Insulation.

6. Methods for accurately locating the well bore (See Section 3.6.8).

7. Collector mooring and positioning systems and arrays (See Section 3.6.3.3).

a. Current, depth, weather sensitivity.

b. Capability for entering into the jet zone.

8. Onboard systems for (See Section 3.5):

a. Degasification.

b. Demulsification.

9. Systems for lightering accumulated recovered oil to other tankers and resupply (See Section 3.2.5.1).

10. Handling equipment configuration for collector, riser, associated positioning, pumping requirements, moon pool placement, and necessary debris removal from the wellhead region (See Sections 3.2.1.8, 3.4, and 3.6.5).
11. Onboard gas and oil burner equipment (See Section 3.5).
12. Safety equipment considerations including (See Section 3.2.2):
    a. Ventilation.
    b. Water curtains for all engine exhausts.
    c. Vessel abandonment.
    d. Life support emergency.
    e. Structural cooling.
    f. Rapid disconnect from mooring and collector/riser equipment.
13. Contingency procedures for systems failures (See Sections 3.5.5 and 3.6.7).
14. Gas detection and alarm systems specifications (See Section 3.2.2).
15. Hotel and operation area configurations (See Section 3.2.1.5).
16. Provisions for encountering sour gas, safety, metallurgy (See Sections 3.4 and 3.5).
17. Equipment specifications for debris removal around the well bore (See Section 3.6.5.4).
18. Dispersant storage and application provisions (See Section 3.5.6).

12b 2.0

SECTION 2.0
LITERATURE REVIEW (TASK 1)
FINAL REPORT
SHIP-MOUNTED SUBSURFACE
COLLECTOR SYSTEM
CONTRACT NO. 14-12-0001-30135

2.0 LITERATURE REVIEW (TASK 1)

The objective of the literature review was to determine the state of the art related to the studies and analyses of the characteristics of subsea wellhead blowouts with the ultimate objective aimed at developing a practical system for collecting the resulting oil spill. The complete text of the results of the literature review are bound separately as Volume 2 of 2 of this report. For ease of reference the conclusions of the literature review are repeated here.

2.5 Conclusions of Review

2.5.1 General Observations/Findings

During the literature review a number of observations were made which are of importance and of which anyone seeking to apply the results of these studies towards the development and judicious evaluation of a practical system or concept should be aware.

- o There is an abundance of literature on the subject, and an impressive amount of research work dealing with hydrodynamics of blowouts, collector concepts and model tests has been carried out.
- o The most pertinent studies are:
  - Dr. Milgram's model tests on collector;
  - Collector installation tests by Teigen in Norway and COOSRA sponsored tests in Canada;
  - The tanker study by German and Milne (for EPS);
  - Plume, flow and riser studies by Topham et al;
  - Collection system concept and blowout studies by Otter Group and the VERITAS.
- o The hydrodynamic behavior of the blowout is not fully understood, nor is there general concurrence among the researchers inspite of the commonality of the basic theory used by all. There are disagreements on theoretical as well as experimental findings. For a practical system,

however, some of these disagreements are only of academic value since they neither can be assessed or controlled economically, nor do they contribute much towards the containment problem.

- o The model tests on collector installation have revealed two significant parameters:
  - that the centering effect of the plume (on the collector and riser) is insignificant to mild; and
  - the plume forces on the collector close to the wellhead are moderate.

  Other anomalous conditions (fire, weather and debri, etc) have not been simulated.
- o The discrepancies between different findings can be attributed to individual approaches, personal opinions, accuracy of modelling and simulation, the total experimental set-up, methods of measurement, and the quality of data reduction and interpretation. For example, the confines of a test tank can significantly alter the nature of a simulated plume than what could be observed in a real blowout situation.
- o Inspite of lack of general agreement about what may be called the best collection system concept or design, the ship-mounted open collector system (Sombrero type) has received the maximum acceptance.
- o The Norwegian researchers/investigators, who have contributed the most to these studies, tend to favor a closed collector providing a sealing on the ocean floor. They appear to give much higher priority to the net effectiveness than the practicality of the concept or its over-all economics.
- o The practical experience with the collection or containment of a subsea blowout is limited to the "Sombrero" on the Ixtoc I, which is also the biggest and the longest lasting blowout to date.

- o Disregarding the degree of success of the "Sombrero", and putting aside its political implications, it is safe to say that it provided a lot more data and information than all the studies combined. It had proved the viability of a subsurface collection system.
- o The technical feasibility of a subsea collection system has been generally accepted; but the operational aspects remain as major hurdle.
- o The economic considerations also are major deciding factors. The probability of under-writing the cost through alternate uses of the system can be a very attractive proposition.
- o The blowout statistics have been found to be inadequate to influence the decision in favor or against the development of a collection system.
- o All major developmental activities in the area of subsea containment of blowouts seem to have been put on hold in Canada and Norway.

2.5.2 Status of Technology

In view of the general observations from the literature review and the knowledge of the practical offshore operations, the status of technology, as it applies to subsurface collection of blowouts, can be reasonably assessed. It should be noted, though, that:

- o Offshore operation is as much an art as it is a science.
- o Almost every offshore project is unique, even though it may appear to be routine type.
- o All offshore characteristics and parameters can not be accurately simulated, modelled or scaled. Therefore, in such situations the laboratory tests can be qualitatively more significant than quantitatively.
- o In almost every new venture some risk is immanent.

- Due to the uniqueness of offshore projects, the methods, equipment and hardware are almost invariably improvised to suit the requirements. Therefore, a new system or component may evolve out of the existing technology for each application, yet it may not be an off-the-shelf item or be commercially available.

In view of the foregoing comments the status of technology can be summed up as follows:

- Gas lift is an old science and has been used extensively under artificial conditions to lift large quantities of water for water injection, flooding and cooling towers. The practical ramifications of gas lift phenomenon from a blowout can be considered to be within the realms of existing knowledge.
- From the system and hardware point of view most of them either exist or can be developed from the existing technology. The riser, tanker, process and separation, lightering and transfer, fire fighting and safety systems - all are considered commercially available in the sense that they can be produced even though they may not be off-the-shelf items.
- The collector is not a completely proven item, but enough theoretical and practical knowledge exists for its design. Moreover, being a simple, unsophisticated conical structure, the collector can always be modified as needed.
- The technology and hardware for locating the blowing well and for positioning the collector also exist; but they have not been proven in actual blowout situation. However, there is ample confidence that the system can be made to work. In fact, as long as the adverse effects of the gaseous plume are avoided (or beneficialy utilized) the locating and positioning system can be considered to be proven. The accuracy of these devices is excellent. For

example, the positioning accuracy of less than 5 ft was achieved during the installation of Exxon's Lena Guyed Tower (1,078 ft tall, 120 ft square base and weighing 28,000 tons) in 1,000 ft water depth. The required accuracy was 25 ft. radius.

- The best evidence of the existence of components and hardware is provided by many floating production systems (FPS) that have been in operation for a number of years in various parts of the world. Although there are many floating or mobile systems acutally installed using semi-submersible vessels or barges as the surface support, there are at least six FPSs that use tankers (five of these are described in Table 2.5-1).

  The use of moored tankers as permanent floating storage facilities at offshore oil fields started in the mid-1960's. However, the first Floating Production Storage and Offloading (FPSO) system went into service in 1977 in Shell Oil Co.'s Castellon field (see Table 2.5-1 and Fig. 2.5-2). In 1979, a tanker was converted to a floating production facility for use in Petrobras' Garoupa field. The newest tanker-based FPSO systems include the Cadlao (Fig. 2.5-3) and Tazerka (Fig. 2.5-4). All are conversions.

In general, most systems have performed well with minimal downtime once initial problems were overcome. Most systems were designed for production in the design environmental conditions. In many cases most of the above-water equipment were leased.

The technology for FPS and FPSO systems is well advanced and proven. A tanker-mounted system can be used in water depths from about 100 ft to 6,000 ft.

The latest and more advanced versions of the floating systems are the British Petroleum's "SWOPS" (Single Well Oil Production System) and Petro Jarl's "PTS" (Production

and Testing System). These ships are currently under construction. The S.W.O.P.S. is dynamically positioned and is configured to lower a production riser through a moonpool and produce oil from a single well into its storage tanks (see Fig. 2.5-5). When the storage tanks are full, the same ship will disconnect and rack the riser and proceed to port for unloading. Then return to site, reconnect and resume production.

The PTS is designed for extended well testing as well as early production. It is a turret moored tanker with dynamic positioning. The risers are lowered through a moonpool in the turret near mid-ship similar to the BP-SWOPS. For unloading it will use shuttle tankers.

- The turret mooring is not new. The original patents issued on turret designs have long expired. They are also proven in practice.
- The BP's Emergency and Support Vessel "Iolair" is another example. The vessel, already in service, is designed to act as a forward operations and communications center in the event of a blowout or fire on a rig and facilitates well- killing operations. It must be able to remain on station for extended periods under dynamic positioning to enable effective fire-fighting to continue. These are just two of the many functions Iolair is required to perform. It is not designed to contain a blowout but it is designed to work in a blowout situation including well-killing. There are other Multiple Service Vessels (MSV) that perform most of the functions Iolair does.

In summary, the FPSO systems and the vessels like Iolair provide most of the technological base for a ship-mounted subsurface collector system.

TABLE 2.5-1

TANKER BASED, FLOATING PRODUCTION SYSTEMS

FIELD NAME	CADLAO	CASTELLON	GAROUPA	HONDO	TAZERKA
DEVELOPMENT TYPE	MARGINAL	MARGINAL	EARLY PRODUCTION	EARLY PRODUCTION	MARGINAL
LOCATION	Phillipines	Spain	Brazil	California	Tunisia
WATER DEPTH (FT)	310	384	544	490	460
DESIGN PRODUCTION CAPACITY (1000 BOPD)	30	20	70	45	20
G.O.R. (SCF/BBL)	450	120	N.A.	580	LOW (Mostly CO_2)
WATER PRODUCED (BBLS/D)	40%	50%	N.A.	8%	N.A.
SULPHUR %	N.A.	0.2	N.A.	YES	N.A
H_2S (PPM)	2260	N.A.	N.A.	100	NONE
WAX	N.A.	N.A.	N.A.	NONE	N.A.
SEPARATION STAGES	2	N.A.	2	2	N.A.
GAS DISPOSITION	Boiler Fuel & Ground Flared	Boiler Fuel & Incinerated	Pipeline from Platform	Pipeline to platform to shore	Vented
GAS LIFT	N.A.	N.A.	Yes	Yes	N.A.
PRODUCED WATER DISPOSITION	Treat & Dump	N.A.	N.A.	Injection Wells on Platform	Provisions for Dump Overboard
OIL STORAGE (BBLS)	720,000	420,000*	350,000	210,000	N.A.
RISERS	Flexible with Sub-surface Buoy	Flexible Clamped to Chain Links	Hoses to CALM	Ext. Piping Jumper Hoses & swivels	Internal Piping
NUMBER/TYPE OF WELLS	2	1 Below Tkr 1 Satellite	7 Satellites	20 (Platform)	8 (Max) Satellite
DWT	65,000	N.A.	N.A.	50,000	210,000
EXPORT BY	Shuttle Tanker Bow Moored	Shuttle Tanker Along Side	Pipeline	Shuttle Tanker Bow Moored	Shuttle Tanker Along Side
DATES OF PRODUCTION	1981 to Present	1977 to Present	1979 to Present	1981 to Present	1982 to Present
FIELD DEVELOPMENT COST (MILLIONS OF US $)	37	15	252	402 (Incld. Platform)	200 (Approx).
OPERATING COST (THOUSANDS OF US $/DAY)	15	10	50	N.A.	N.A.
LEAD TIME - START DESIGN TO FIRST PRODUCTION (MONTHS)	18	11	41	N.A.	26

*Oil & Water Storage

N.A. = Not Available

0349X

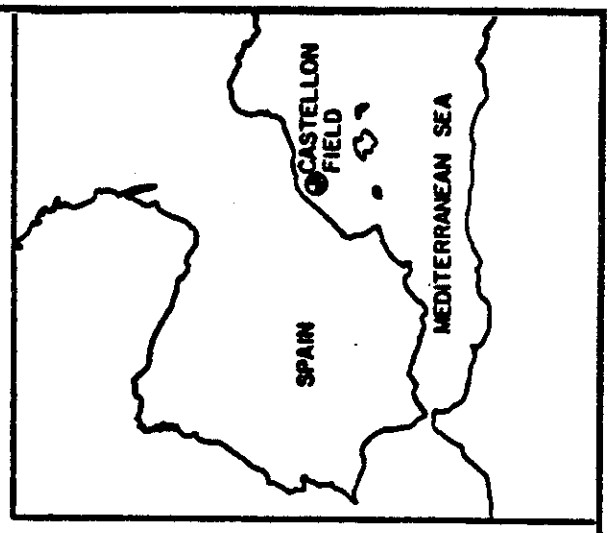

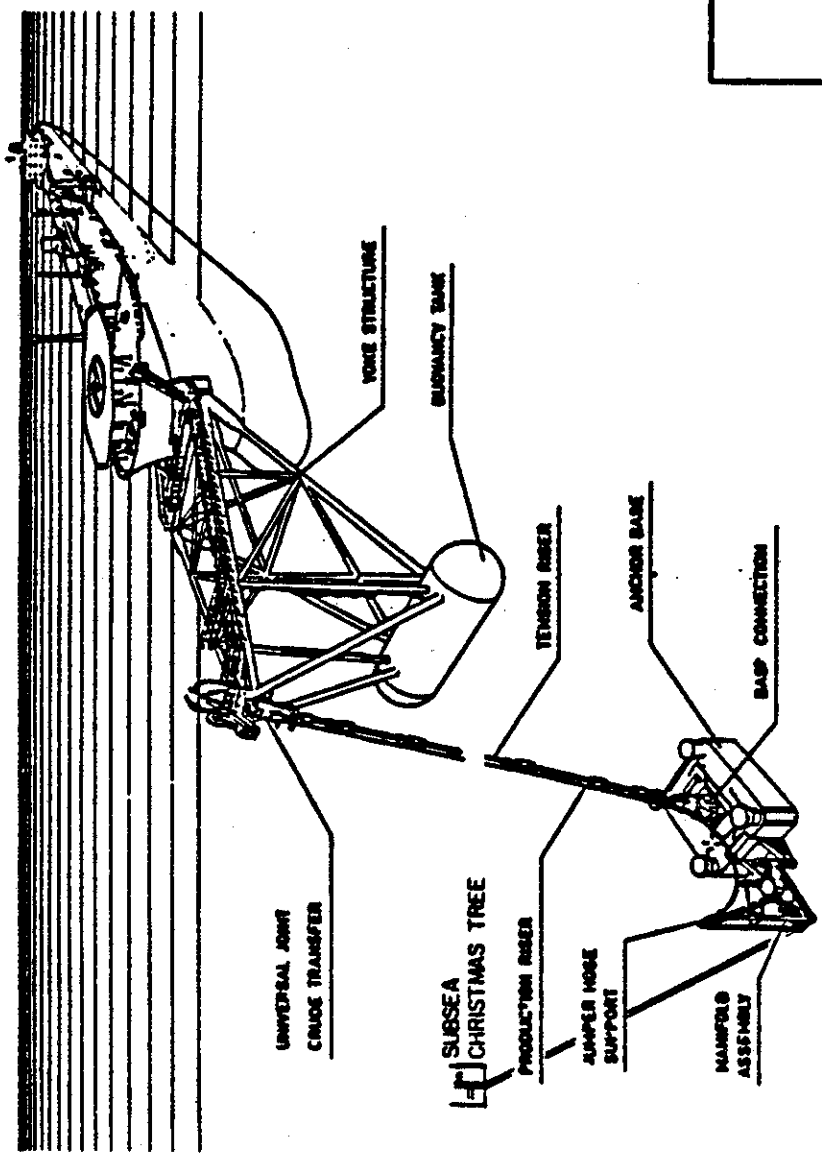

CASTELLON

U.S. DEPARTMENT OF THE INTERIOR
MINERALS MANAGEMENT SERVICE

Brown & Root Development, Inc.
HOUSTON, TEXAS

SCALE: NONE	TITLE OF DRAWING: FLOATING PRODUCTION SYSTEM
DRAWN BY: E.H.S. DATE 8-15-85	
CHECKED BY: ANLS DATE 8-20-85	
APPROVED: EEB DATE 8-20-85	
CUSTOMER APPROVAL	CONTRACT NUMBER XC-0030 / DRAWING NUMBER FIGURE 2.5-2

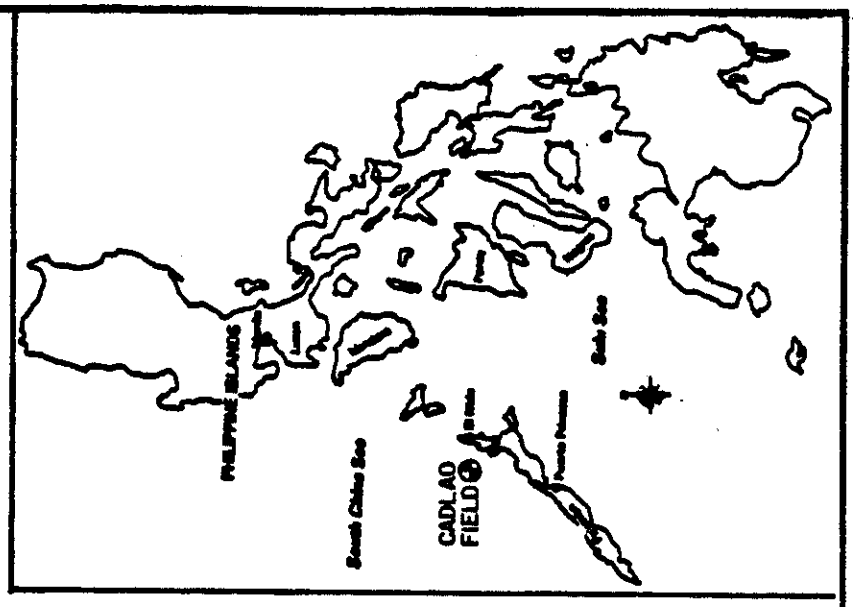

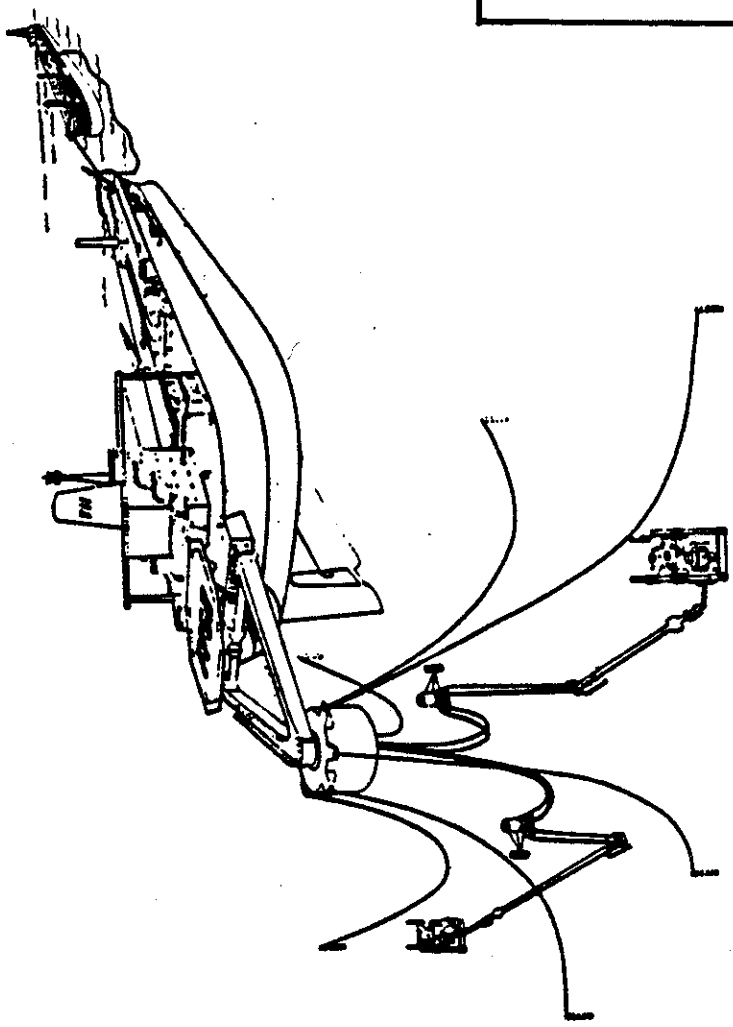

CADLAO

U.S. DEPARTMENT OF THE INTERIOR
MINERALS MANAGEMENT SERVICE

Brown & Root Development, Inc.
HOUSTON, TEXAS

SCALE: NONE		TITLE OF DRAWING: FLOATING PRODUCTION SYSTEM
DRAWN BY: A. FOX	DATE 8-9-85	
CHECKED BY: ANLS	DATE 8-20-85	
APPROVED: EEB	DATE 8-20-85	
CUSTOMER APPROVAL	CONTRACT NUMBER XC-0030	DRAWING NUMBER FIGURE 2.5-3

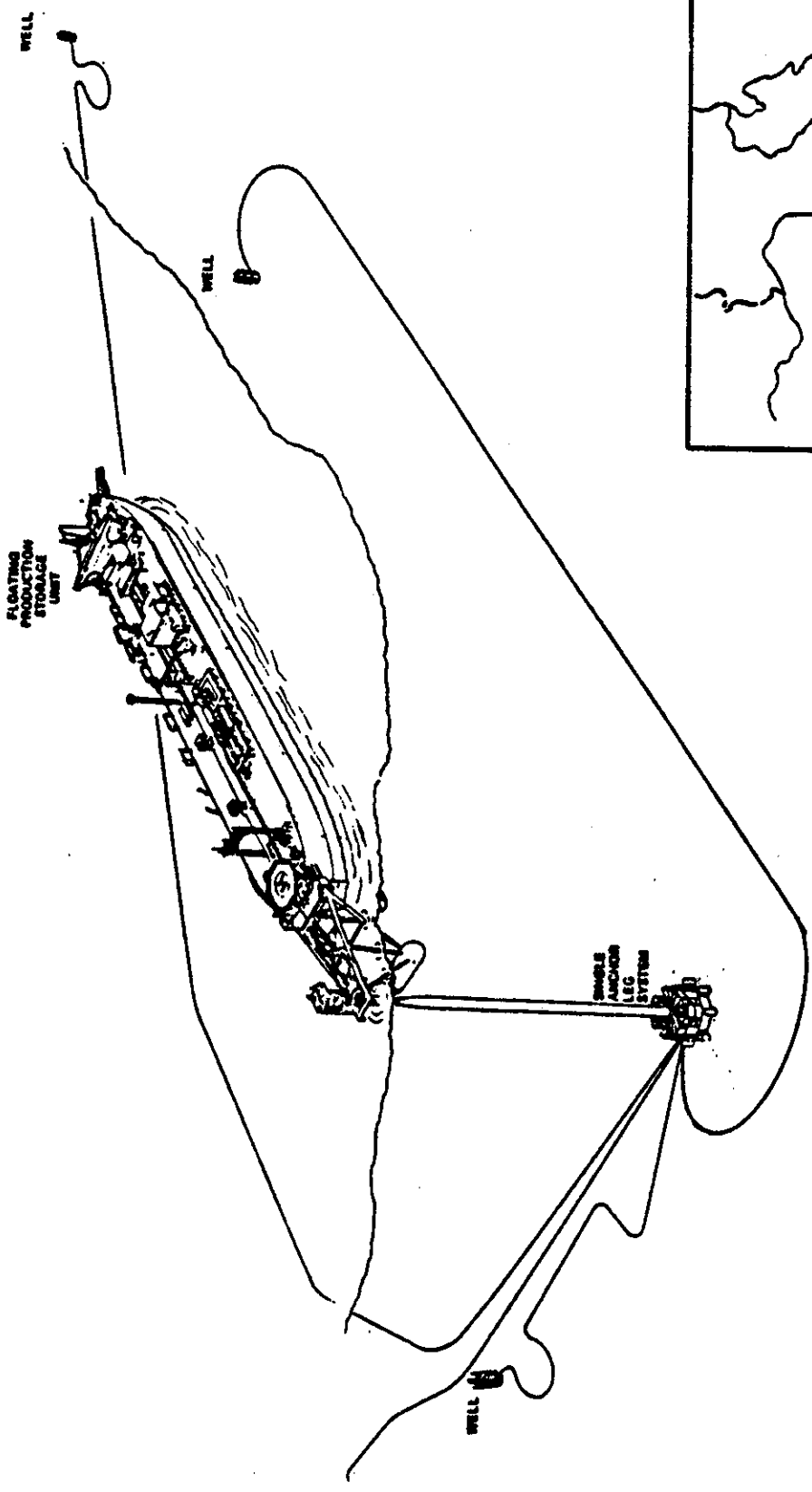

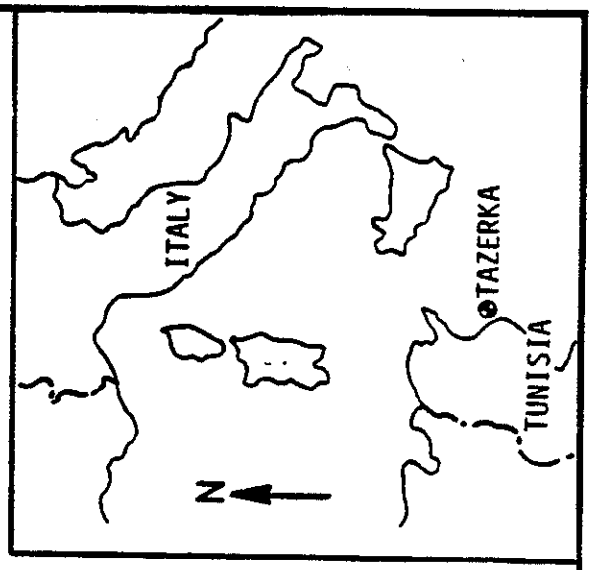

TAZERKA

U.S. DEPARTMENT OF THE INTERIOR
MINERALS MANAGEMENT SERVICE

Brown & Root Development, Inc.
HOUSTON, TEXAS

SCALE: NONE	TITLE OF DRAWING: FLOATING PRODUCTION SYSTEM
DRAWN BY: A. FOX DATE 8-7-85	
CHECKED BY: ANLS DATE 8-20-85	
APPROVED: EEB DATE 8-20-85	
CUSTOMER APPROVAL	CONTRACT NUMBER XC-0030 / DRAWING NUMBER FIGURE 2.5-4

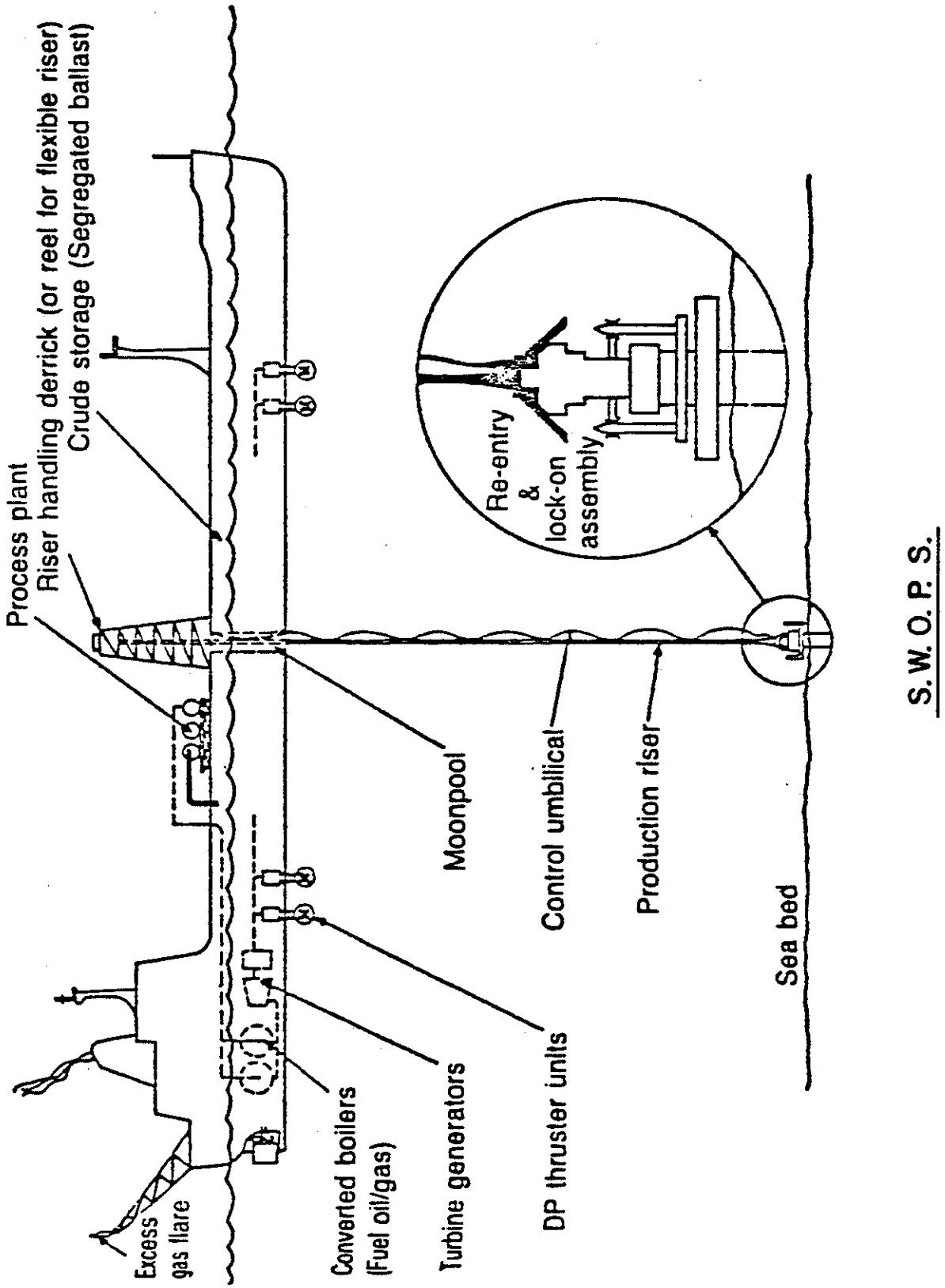

U.S. DEPARTMENT OF THE INTERIOR
MINERALS MANAGEMENT SERVICE

Brown & Root Development, Inc.
HOUSTON, TEXAS

SCALE: NONE	TITLE OF DRAWING: FLOATING PRODUCTION SYSTEM
DRAWN BY: A. FOX DATE 8-7-85	
CHECKED BY: ATNLS DATE 8-16-85	
APPROVED: EEP DATE 8-20-85	
CUSTOMER APPROVAL	CONTRACT NUMBER XC-0030 / DRAWING NUMBER FIGURE 2.5-5

- For an optimum design of the collection system the knowledge of the characteristics of the blowout plume is inadequate. The most important limitation is that the flow rates and collection efficiencies can not be calculated accurately. Therefore, proper sizing of riser(s) and the separation/ processing equipment is difficult.

- From the operations point of view the major offshore construction projects such as large platforms (fixed, floating, guyed or TLP's) and subsea activities including the installation of subsea production systems, large templates, manifolds, etc., represent extremely difficult tasks that have been successfully completed. The situations at a blowout are very different but basically, the surface fire is the only major hazard that is not present in other situations. The experience of dealing with blowout collection is lacking but it is not totally absent. The limited experience from Ixtoc I blowout coupled with other offshore experiences provide the basis for concluding that subsurface collection of a blowout is operationally a difficult task but not an impossible one.

  In final conclusion it can be said that the net result of the literature review yielded the following summation: a Ship-mounted Subsurface Collection System is technically and operationally feasible. The balance of this report will investigate this hypothesis further.

1a b 3.0

3.1 System

SECTION 3.1

SYSTEM PARAMETERS

FINAL REPORT

0341X

3.1 System Parameters

3.1.1 Basis of Parameters

As a pre-requisite to the system development and the subsequent cost analysis it is necessary to establish a workable set of parameters. This involves the following steps:

- o A review of all the system specifications furnished by the MMS.
- o A parametric evaluation of the given data for feasibility and achievability.
- o An examination of the specifications for mutual conformance, and their impact on the hardware and operational aspects of the system development.
- o Identification of parameters that need further scrutiny.
- o Matching of performance and operational criteria with environmental conditions for a workable system definition and configuration.

The system parameters are divided into six groups on the basis of essential requisites:

1. Functional Requirements
2. Operational Requirements
3. Environmental Conditions
4. System Capacity and Size Requirements
5. Subsystem Interface Requirements
6. Performance Requirements

The first two of these requirements are described in Sections 1.2 and 1.3 of this report.

The site environmental conditions and design parameters to be used for the analysis as specified in the Contract are:

- o Winter season,
- o Southern California offshore location,
- o 100 nautical miles offshore,
- o 300 m (1,000 ft) water depth.

The specified system capacity and size data include:

- o Blowout discharge rate of 30,000 barrels a day of medium weight crude and 765,000 m^3, (27 x 10^6 scf) per day of gas.
- o Separation and process facilities to handle in excess of 1 x 10^6 barrels per day of liquid flow.
- o Storage capacity onboard the ship for 14 days of production at the rate of 30,000 bbls/day.
- o A vessel (ship) of approximately 100,000 ton DWT and measuring 252 m long x 30 m beam x 12 m draft (827 ft x 98 ft x 39 ft).

The subsystem interface requirements cover the essential elements of a system development. It involves establishing definitions, criteria, boundary conditions, premises, tolerances, and constraints for interfacing subsystems, components and operations. It requires review of every major element (hardware and operation) to ensure proper integration, smooth transition, and proper sequencing of operations. Identification of interferences, mismatches and bottlenecks are also required leading to a total system compatibility assessment and isolation of areas requiring special attention.

The most important performance requirement relates to the collection efficiency which is specified to be 95 percent. It can be defined in two ways:

1. The fraction of oil flowing up through the collector and riser.
2. The fraction of oil actually collected after separation.

The first definition has been the most common, whereas the second definition is more meaningful. In this report, the first definition will be used for expediency.

The duration of the blowout collection process (or the completion of relief wells) is given to be 100 to 150 days.

3.1.2 Flow Rates and the Collection Efficiency

The specifed blowout characteristics giving the flow rates of oil and gas are the base parameters, but by themselves are insufficient for the design and analysis of a subsurface collection system. The single most important variable is the total liquid flow rate through the riser. This variable depends upon:

- o The blowout reservoir characteristics,
- o Water depth,
- o Collector height above the blowout source,
- o Collector size and configuration,
- o Riser size and configuration.

The last two elements are dependent on each other and the flow rate.

The theoretical basis of the flow of oil and gas from a blowing (or blown-out) underwater well includes:

- o The hydrodynamic characteristics of the blowout, either as a momentum-driven jet or a buoyancy-driven plume.
- o The radial velocity and density distribution profiles of a plume, either Gaussian or tophat.
- o The existence of a virtual origin (Fig. 2.3-37) of the plume.
- o The spread of plume and its meandering nature.

The buoyancy-driven plume is the most universally accepted hydrodynamic characteristic of the blowout, and the volume of the entrained water in the plume is the most important factor dependent upon the above phenomena.

As noted in Section 2.5, the theoretical and experimental approaches used for obtaining reliable numbers for flow rates (and hence the collection efficiencies) are inadequate. But, an estimate of the flow rate is essential for the system development analysis. Therefore, the available analytical tools, [8, 29, 30], are used to obtain order-of-magnitude flow rates for various combinations of water depth, collector height, etc.

The input parameters were intended to include liquid flow rates and percentages of oil collected for the ranges of diameters, water depths, lifts, and the collector height. In absence of these data the results of the Bugg Spring tests [8] are used to develop the necessary parameters. However, the interpolation function derived from the test results is limited to the collection efficiency only, and the effects of variation of water depth are not included. Consequently, the simplified formulas for flow rates as suggested by Topham et al [29] and Rowe and Topham [30] have been used in conjunction with Milgram's interpolation function [8] for collection efficiency. The detailed calculations are given in Appendix 2.1.

These calculations are intended to show a trend and reveal the influences of various independent parameters on flow rates, efficiencies etc. These are not to be taken as exact quantifications, but they can be used as representative orders of magnitude.

Realizing that the exact computation of the volume of entrained water in the plume is presently not possible, the total flow through each of two different riser sizes (20 and 24 inches) have been calculated using Beggs and Brill correlation for two-phase flow. The calculated flow rates for various water depths and gas flow rates are shown in Table 3.4-1. These flow rates were subsequently used by Dr. Milgram to compute the probable collection efficiencies using his interpolation function (see Fig. 3.1-13 and Appendix 2.6).

The results of the various calculations are graphically shown in Figures 3.1-1 through 3.1-13. Their parametric significances are discussed below.

Fig. 3.3-1 shows the relative variations of entrained water with respect to the collector height and the water depth. The formula for flow rate ($Q_E = 0.4\ Qo^{1/3} z^{5/3}$) used here is not suitable for

quantitative analysis. Nevertheless, it can be noticed that the volume of entrained water reduces with increase in water depth, and it increases with increase in collector height.

Fig. 3.1-2 is an expanded view of the lower portion of the curves in Fig. 3.1-1.

Fig. 3.1-3 portrays the variation of collection efficiency with respect to the collector height and water depth. The values were obtained from Dr. Milgram's interpolation function and the flow rates from Fig. 3.1-1. The most interesting (but unsubstantiated) revelation from these curves is that in shallower waters the optimum collector height is other than zero. As can be noticed, the collection efficiencies in water depths less than 800 ft are lower for small values of h. They increase with h up to a point and then start dropping again. It is not known whether such a phenomenon is true in practice. Theoretically, however, it can be attributed to the following:

1. These efficiencies were calculated using Dr. Milgram's interpolation function;

$$P = 100 \left[1 - \exp \frac{-A'F'R'}{B' + R'} \right]^{C'}$$

in which F' = modified Froude's number

$$= \frac{Q_T}{[g\,(h-D')^5]^{1/2}}$$

and R' = modified phase ratio

$$= \frac{Q_T}{Q_g} \left(1 + E' \frac{L_B}{L_A}\right)$$

$$L_A = \frac{Q_A^{0.4}}{g^{0.2}} \quad ; \quad L_B = \frac{T}{a_w g}$$

Where Q_T = total liquid flow rate

Q_g = gas flow rate at the wellhead

Q_A = gas flow rate at the entrance to the collector

h = collector height

T = surface tension at the gas bubble and water interface

$\tilde{a}_w$ = sp. wt. of water

A', B', C', D', E' = interpolation constants

Since these equations and constants were obtained on the basis of the test data for a single water depth, it is probable that they do not apply for other combinations of water depth, collector height, and gas flow rates, etc.

2. For a given gas flow rate, Q_{atm}, at the atmospheric pressure,

$$Q_g \# \frac{1}{D + g P_{atm}}$$

where D = water depth

P_{atm} = atmospheric pressure

Due to the non-linear variation of Q_g with water depth, the variations in Q_T and R' are also non-linear (as shown in Figures 3.1-5 and 3.1-7). It is, therefore, probable that the combined effects of the variations in Q_T, F' and R' produce the results as shown in Fig. 3.1-3.

3. There are only two variables, F' and R', in the interpolation function but, as shown in Appendix 2.1, the collection efficiency is an exponential function of all the variables (Q_T, Q_g, D, h, etc.) in a complex form. However, it is observed that for a given change in P, the F' and R' must change by nearly equal amounts which is not the case when water depth and collector height change (see Fig. 3.1-7 and Table A2.1.6 and

A2.1.7 in Appendix 2.1). Also, the quantity $\frac{A' F' R'}{B' + R'}$ first increases with increase in water depth and then decreases. Mathmatically, this would cause the variation in P as noticed in Fig. 3.1-3.

For a definitive conclusion a more rigorous analysis and perhaps model testing is needed.

Fig. 3.1-4 indicates that for a given collection efficiency there is a minimum value of Froude number which, for a given GOR and water depth, limits the allowable collector height; or for a given GOR and collector height sets the water depth limits.

Fig. 3.1-5 shows the variations in F' and R' with collector height and water depths. It can be noticed that R' is much more sensitive to water deptn than F'.

Fig. 3.1-6 shows that for a given change in collection efficiency the F' and R' must change by equal amounts. Such a situation is not achievable in practice.

Fig. 3.1-7 presents the effects of varying water depth on total flow rate, collection efficiency, F' and R' for any fixed collector neight.

Fig. 3.1-8 gives an order of magnitude plume radius as a function of collector height, water depth and wellhead diameter for an arbitrary entrainment coefficient of 0.08. The well head diameter is seen to have much more pronounced effect than water depth. The radius is, of course, directly proportional to the collector height.

Fig. 3.1-9 shows the location of the virtual origin of plume below the wellhead as a function of water depth and wellhead diameter. It reveals that the distance of the virtual origin is very significant in comparison to the collector height, and it must be fully recognized in non-empirical mathematical analyses.

Fig. 3.1-10 is a plot of flow rates using a more refined analytical approach [30]. The flow rates are calculated as a function of water depth, collector height, virtual origin (or the wellhead diameter), the scale ratio and the entrainment coefficient. The total flow rates (Q_T) through the riser are plotted for a colection efficiency of 95 percent using Rowe and Topham formula. The values can be seen to be in the same range as those shown in Table 3.4-1.

Fig. 3.1-11 shows how the gas flow rate at the wellnead can very with water depth and the GOR. It is interesting to note that in deeper waters the effect of varying GOR is not as significant.

Fig. 3.1-12 is a plot of critical and back pressures as a function of water/oil ratio for flow through different size risers in varying water depths. The calculations were done by Topham et al [29] using Neotech's computer program "Wellflo-3". It also shows the comparative results using Beggs and Brill's correlation. Both calculations appear to be in closer agreement for deeper waters than shallow waters. It also shows that the Beggs and Brill's correlation can be used with reasonable accuracy.

Fig. 3.1-13 shows the collection efficiencies of double and single riser/collector systems with 20 inch risers as calculated by Dr. Milgram (Appendix 2.6) using riser flow data from Table 3.4-1.

Other applicable system parameters not discussed here will be found in various sections of the report.

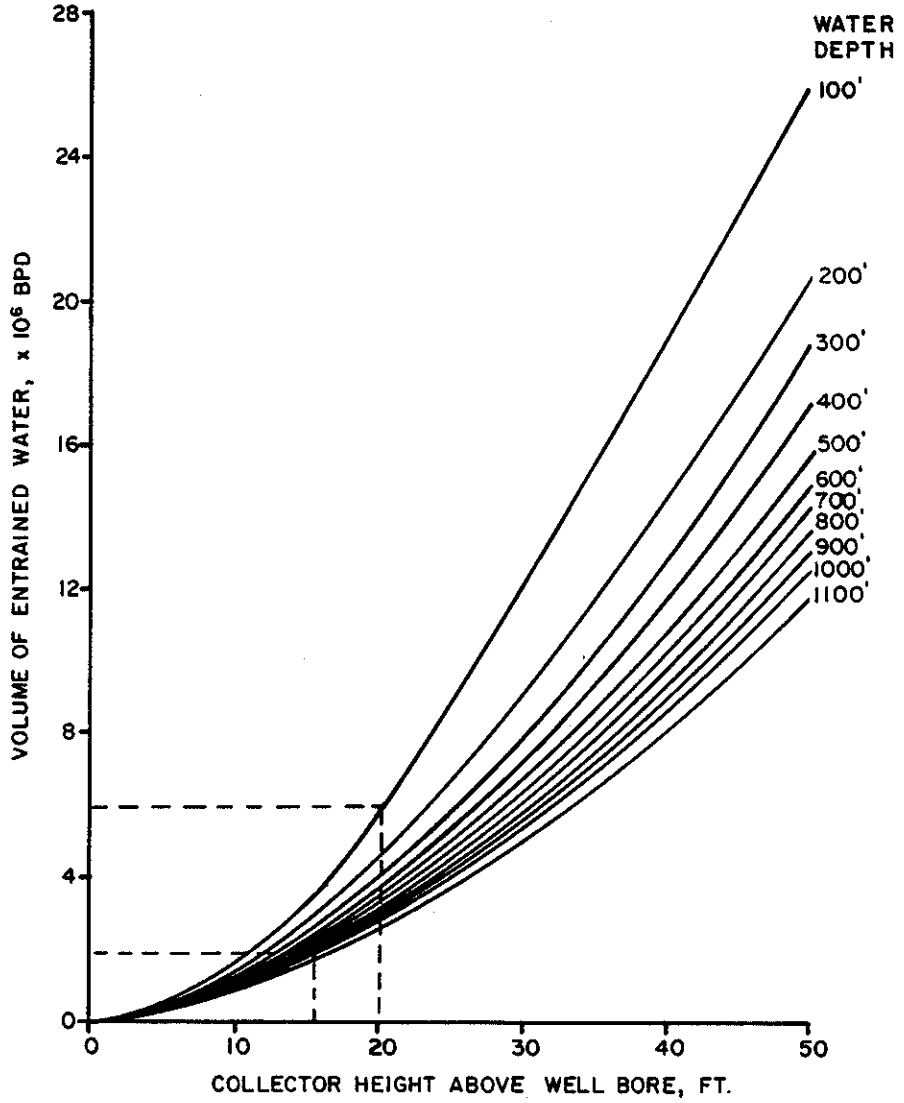

(FROM APPENDIX TABLE A 2.1-2)

U.S. DEPARTMENT OF THE INTERIOR MINERALS MANAGEMENT SERVICE	SCALE: NONE	TITLE OF DRAWING:
	DRAWN BY: RV DATE 8-14-85	ENTRAINED WATER VS
	CHECKED BY: ANLS DATE 8-20-85	COLLECTOR HEIGHT
Brown & Root Development, Inc. HOUSTON, TEXAS	APPROVED: EEJ DATE 8-20-85	TOPHAM ET AL [29]
	CUSTOMER APPROVAL	CONTRACT NUMBER XC-0030 / DRAWING NUMBER FIGURE 3.1-1

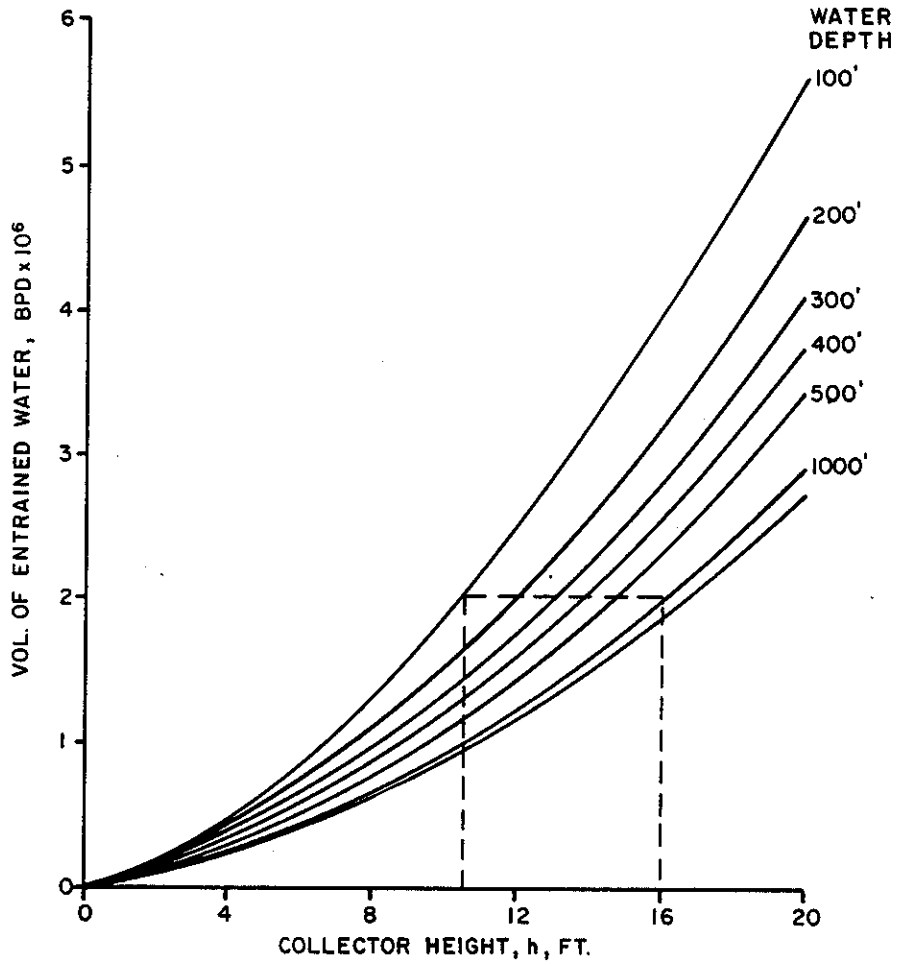

(FROM APPENDIX TABLE A 2.1-2)

U.S. DEPARTMENT OF THE INTERIOR MINERALS MANAGEMENT SERVICE	SCALE: NONE	TITLE OF DRAWING:
	DRAWN BY: RV DATE 8-14-85	ENTRAINED WATER VS COLLECTOR HEIGHT
Brown & Root Development, Inc. HOUSTON, TEXAS	CHECKED BY: ANLS DATE 8-20-85	TOPHAM ET AL [29]
	APPROVED: E&P DATE 8-20-85	
	CUSTOMER APPROVAL	CONTRACT NUMBER XC-0030 / DRAWING NUMBER FIGURE 3.1-2

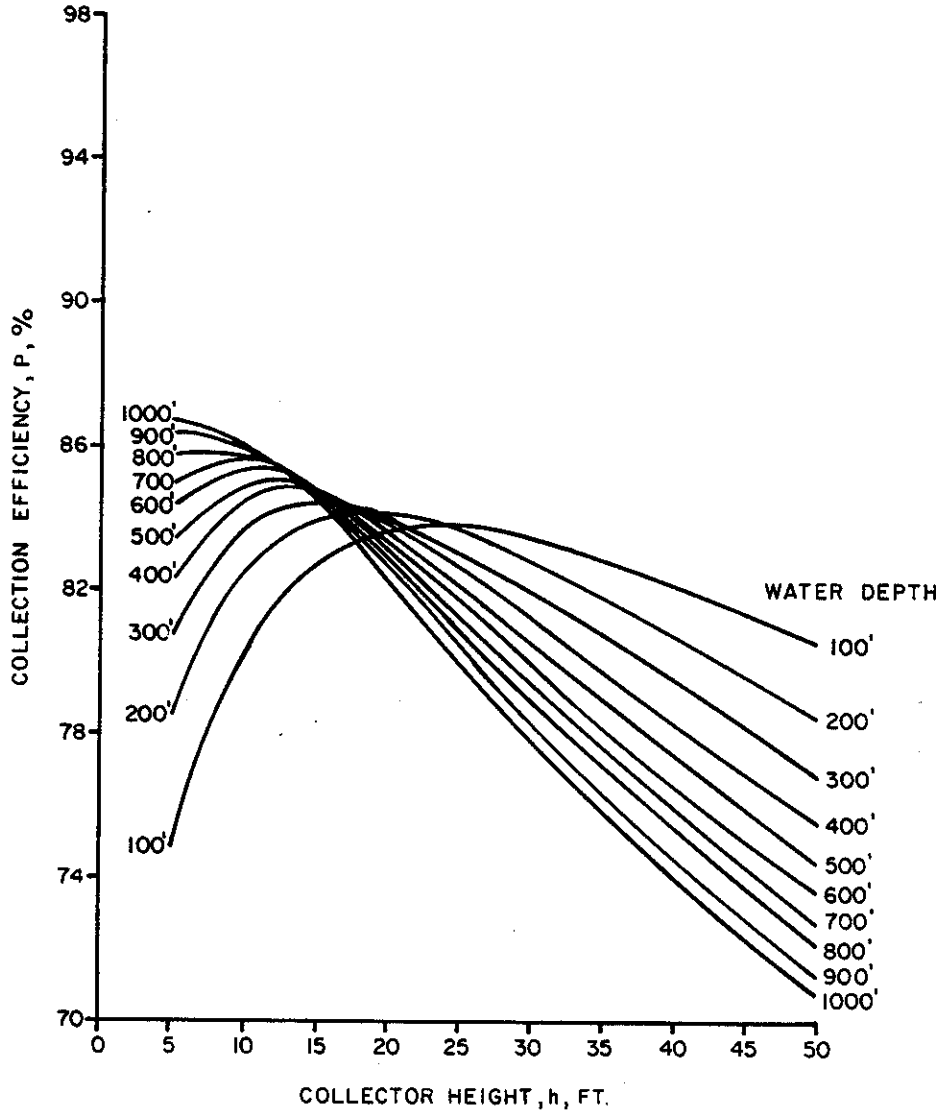

(FROM APPENDIX TABLE A2.1-3)

U.S. DEPARTMENT OF THE INTERIOR MINERALS MANAGEMENT SERVICE	SCALE: NONE	TITLE OF DRAWING:
Brown & Root Development, Inc. HOUSTON, TEXAS	DRAWN BY: RV DATE 8-14-85	COLLECTION EFFICIENCIES VS WATER DEPTH AND COLLECTOR HEIGHT
	CHECKED BY: WLS DATE 8-20-85	
	APPROVED: EBP DATE 8-20-85	MILGRAM [8]
	CUSTOMER APPROVAL	CONTRACT NUMBER XC-0030 / DRAWING NUMBER FIGURE 3.1-3

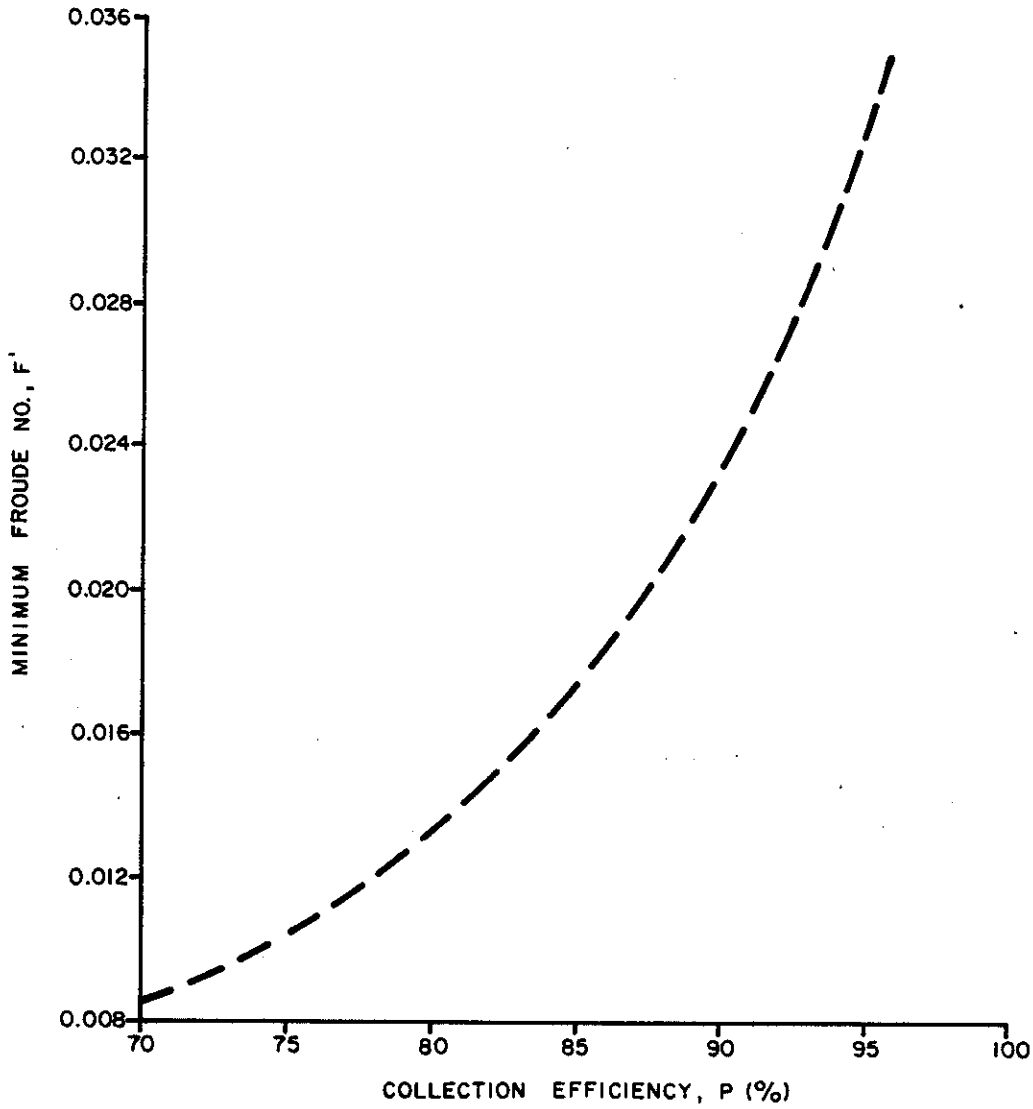

U.S. DEPARTMENT OF THE INTERIOR
MINERALS MANAGEMENT SERVICE

Brown & Root Development, Inc.
HOUSTON, TEXAS

SCALE: NONE	TITLE OF DRAWING: MINIMUM FROUDE NUMBER VS COLLECTION EFFICIENCY MILGRAM [8]
DRAWN BY: RV DATE: 8-14-85	
CHECKED BY: ANLS DATE: 8-20-85	
APPROVED: EGS DATE: 8-20-85	
CUSTOMER APPROVAL	CONTRACT NUMBER: XC-0030 / DRAWING NUMBER: FIGURE 3.1-4

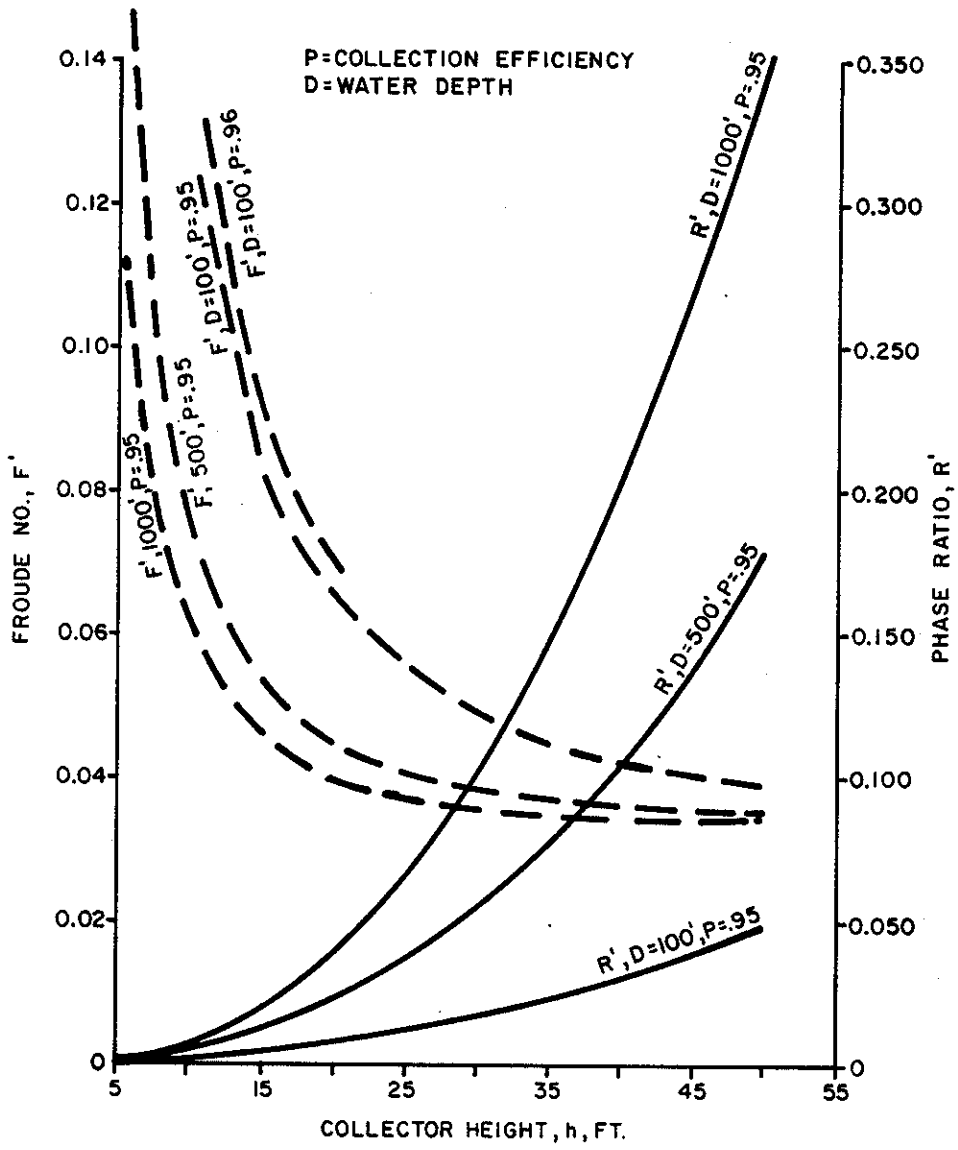

(FROM APPENDIX TABLE A 2.1-4)

U.S. DEPARTMENT OF THE INTERIOR MINERALS MANAGEMENT SERVICE	SCALE: NONE	TITLE OF DRAWING:
	DRAWN BY: RV DATE 8-14-85	FROUDE NUMBER AND PHASE
Brown & Root Development, Inc. HOUSTON, TEXAS	CHECKED BY: ANLS DATE 8-20-85	RATIO VS COLLECTION HEIGHT
	APPROVED: EEP DATE 8-20-85	AND WATER DEPTH
	CUSTOMER APPROVAL	MILGRAM [8]
	CONTRACT NUMBER XC-0030	DRAWING NUMBER FIGURE 3.1-5

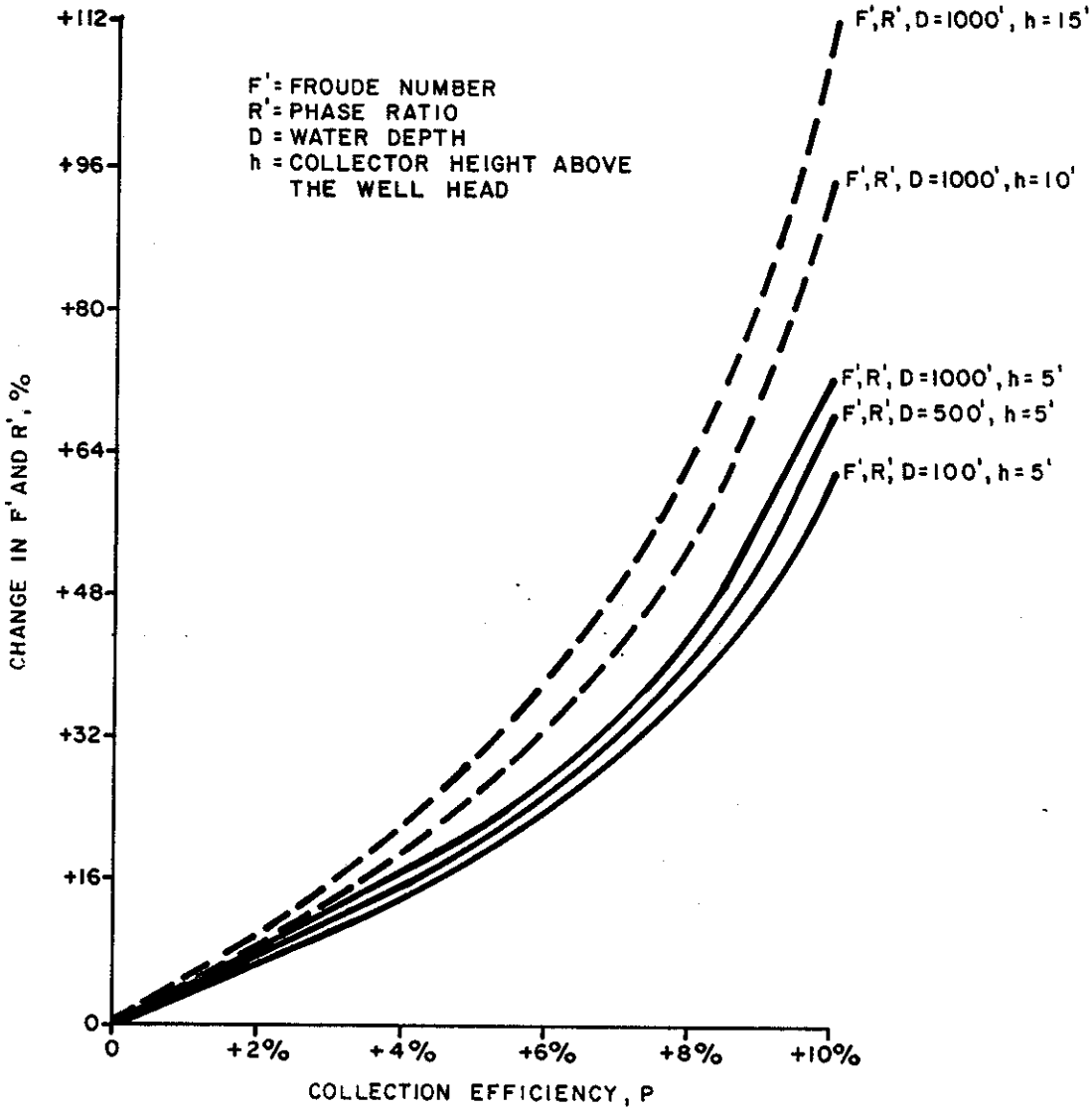

(FROM APPENDIX TABLE A 2.1-5)

U.S. DEPARTMENT OF THE INTERIOR MINERALS MANAGEMENT SERVICE	SCALE: NONE	TITLE OF DRAWING: CHANGES IN FROUDE No. AND PHASE RATIO @ CHANGES IN COLLECTION EFFICIENCY MILGRAM [8]
Brown & Root Development, Inc. HOUSTON, TEXAS	DRAWN BY: RV DATE 8-14-85	
	CHECKED BY: ANLS DATE 8-20-85	
	APPROVED: DATE 8-20-85	
	CUSTOMER APPROVAL	CONTRACT NUMBER XC-0030 / DRAWING NUMBER FIGURE 3.1-6

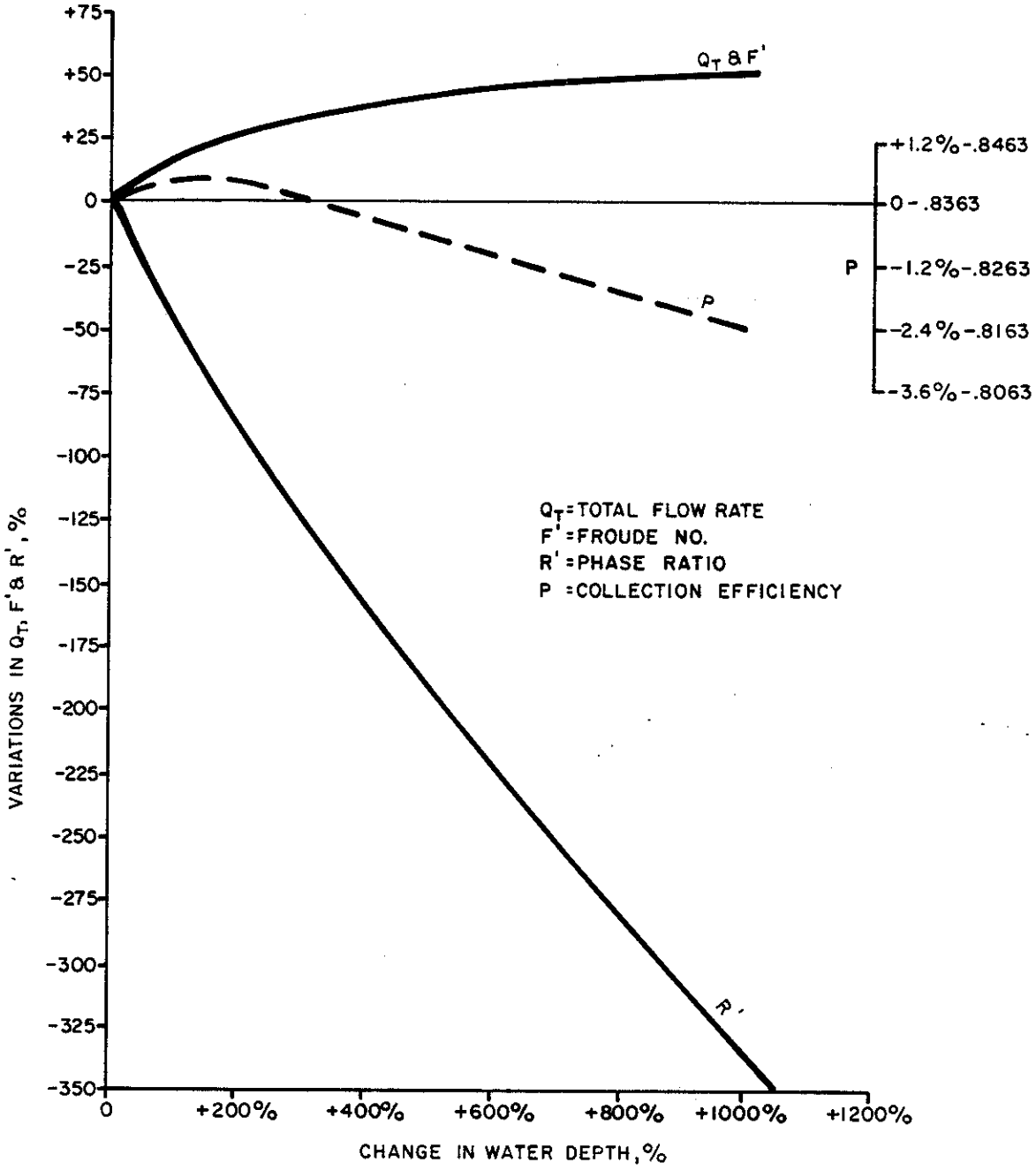

(FROM APPENDIX TABLE A 2.1-7)

U.S. DEPARTMENT OF THE INTERIOR MINERALS MANAGEMENT SERVICE	SCALE: NONE	TITLE OF DRAWING: VARIATIONS IN Q_T, F', R' AND P @
Brown & Root Development, Inc. HOUSTON, TEXAS	DRAWN BY: RV DATE 8-14-85 CHECKED BY: ANLS DATE 8-20-85 APPROVED: EEP DATE 8-20-85	CHANGES IN WATER DEPTH MILGRAM [8]
	CUSTOMER APPROVAL	CONTRACT NUMBER XC-0030 / DRAWING NUMBER FIGURE 3.1-7

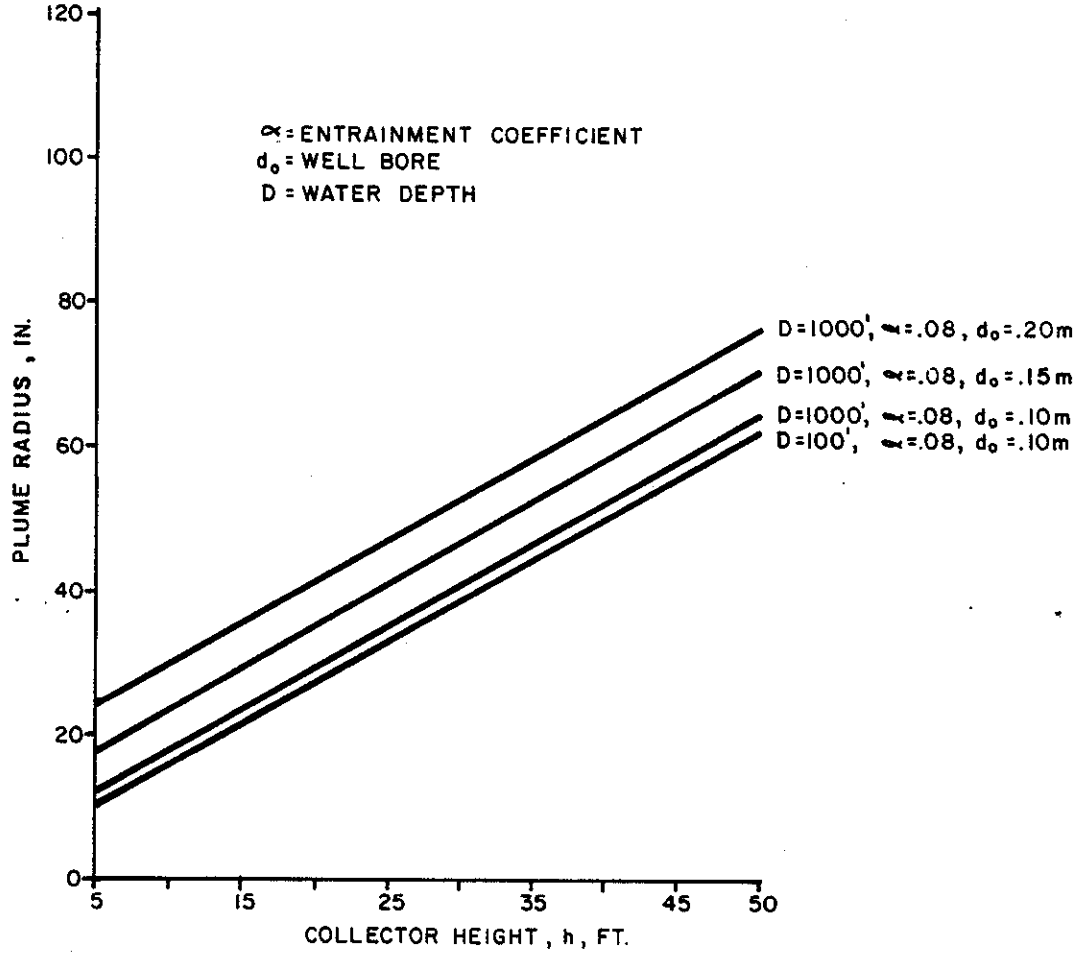

(FROM APPENDIX TABLE A2.1-8)

U.S. DEPARTMENT OF THE INTERIOR MINERALS MANAGEMENT SERVICE	SCALE: NONE	TITLE OF DRAWING:
	DRAWN BY: RV DATE 8-14-85	PLUME RADIUS VS COLLECTION
Brown & Root Development, Inc. HOUSTON, TEXAS	CHECKED BY: ANLS DATE 8-20-85	HEIGHT AND WATER DEPTH
	APPROVED: EEB DATE 8-20-85	ROWE & TOPHAM [30]
	CUSTOMER APPROVAL	CONTRACT NUMBER XC-0030 / DRAWING NUMBER FIGURE 3.1-8

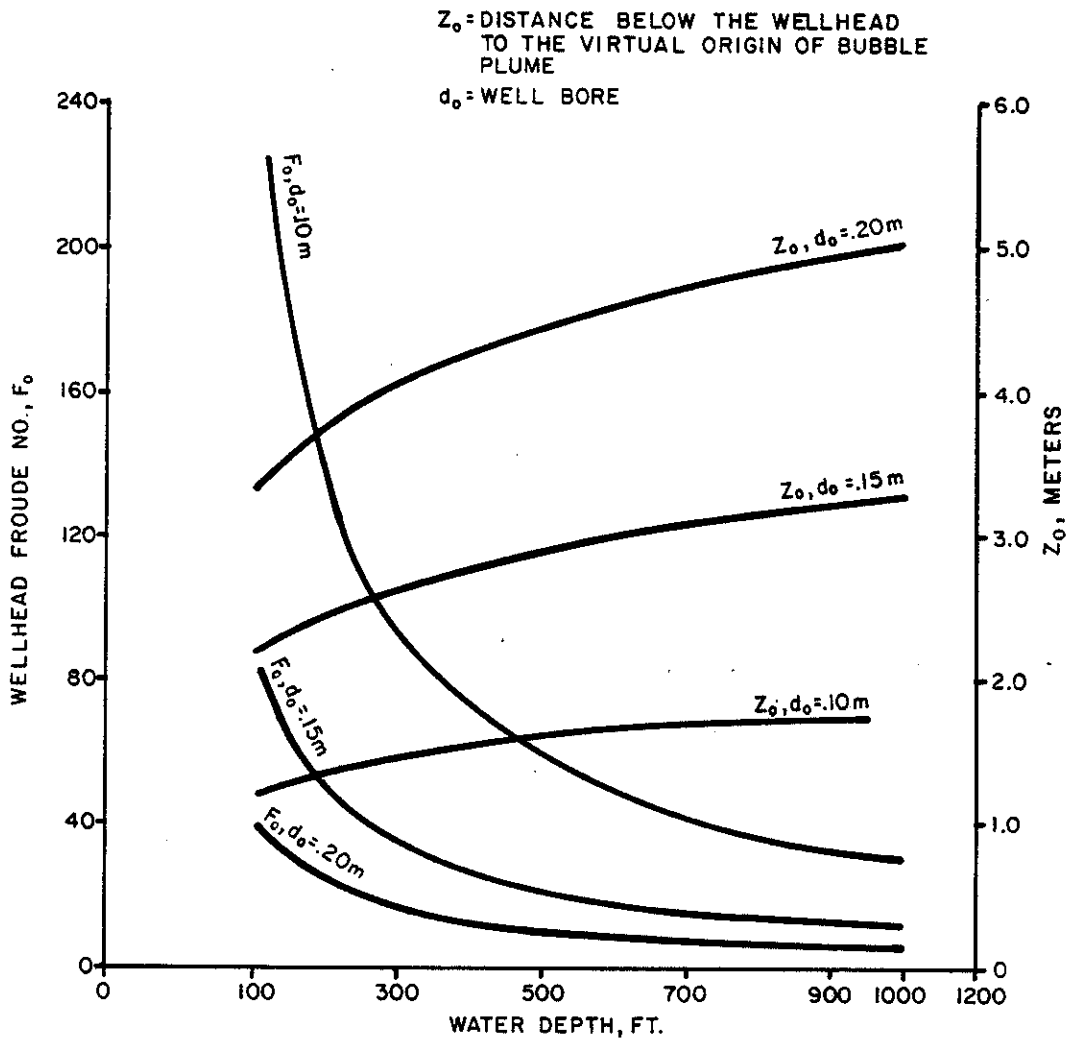

(FROM APPENDIX TABLE A 2.1-9)

U.S. DEPARTMENT OF THE INTERIOR MINERALS MANAGEMENT SERVICE	SCALE: NONE	TITLE OF DRAWING: WELLHEAD FROUDE No. VS WATER DEPTH AND WELLHEAD DIA. ROWE & TOPHAM [30]
Brown & Root Development, Inc. HOUSTON, TEXAS	DRAWN BY: RV DATE 8-14-85	
	CHECKED BY: ANLS DATE 8-20-85	
	APPROVED: EEB DATE 8-20-85	
	CUSTOMER APPROVAL	CONTRACT NUMBER XC-0030 / DRAWING NUMBER FIGURE 3.1-9

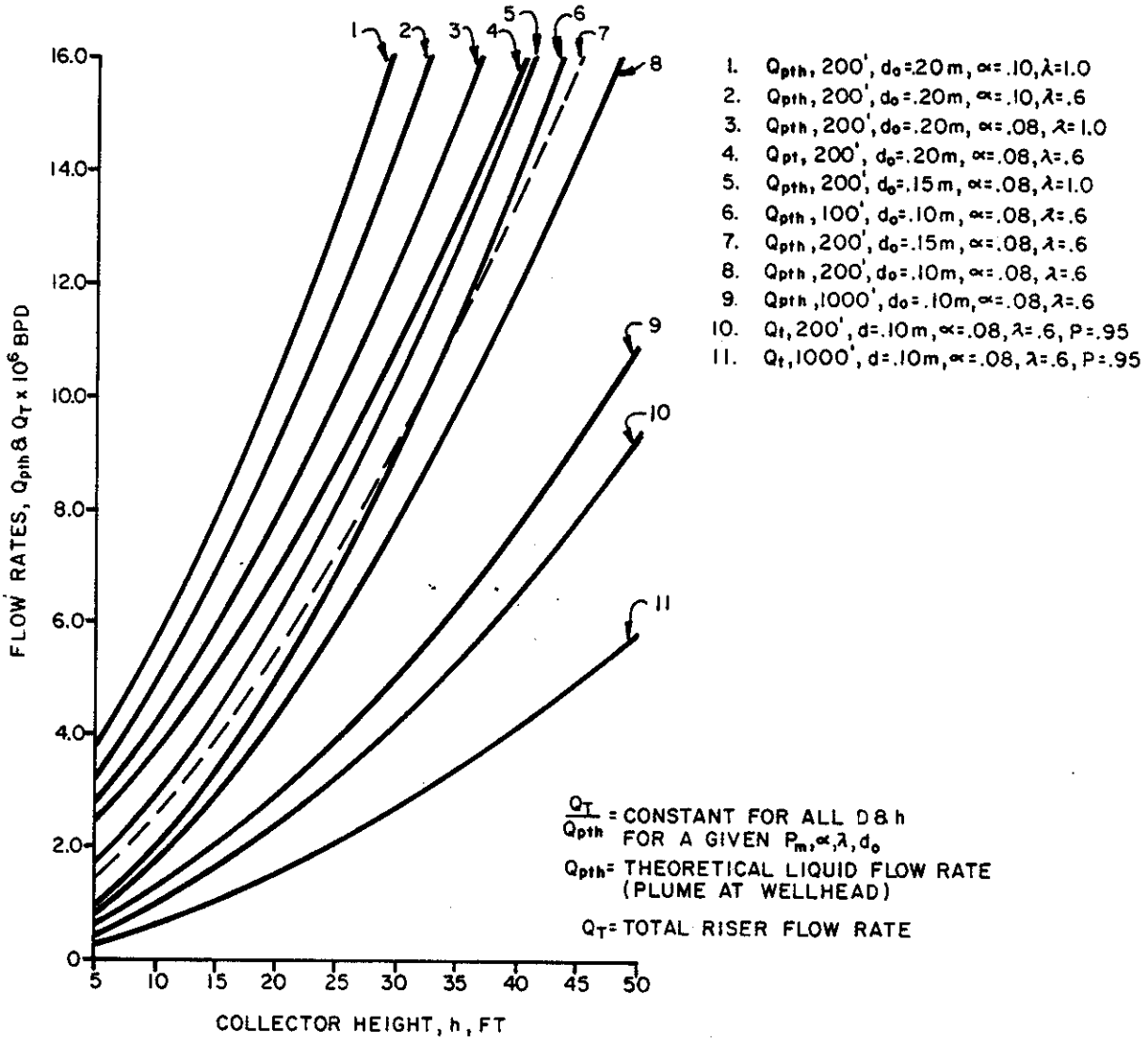

(FROM APPENDIX TABLE A 2.1-10)

U.S. DEPARTMENT OF THE INTERIOR MINERALS MANAGEMENT SERVICE	SCALE: NONE	TITLE OF DRAWING: FLOW RATES VS COLLECTOR HEIGHT FOR VARYING α, λ AND d_o. ROWE & TOPHAM [30]
Brown & Root Development, Inc. HOUSTON, TEXAS	DRAWN BY: RV DATE 8-14-85	
	CHECKED BY: ANLS DATE 8-20-85	
	APPROVED: EEB DATE 8-20-85	
	CUSTOMER APPROVAL	CONTRACT NUMBER XC-0030 / DRAWING NUMBER FIGURE 3.1-10

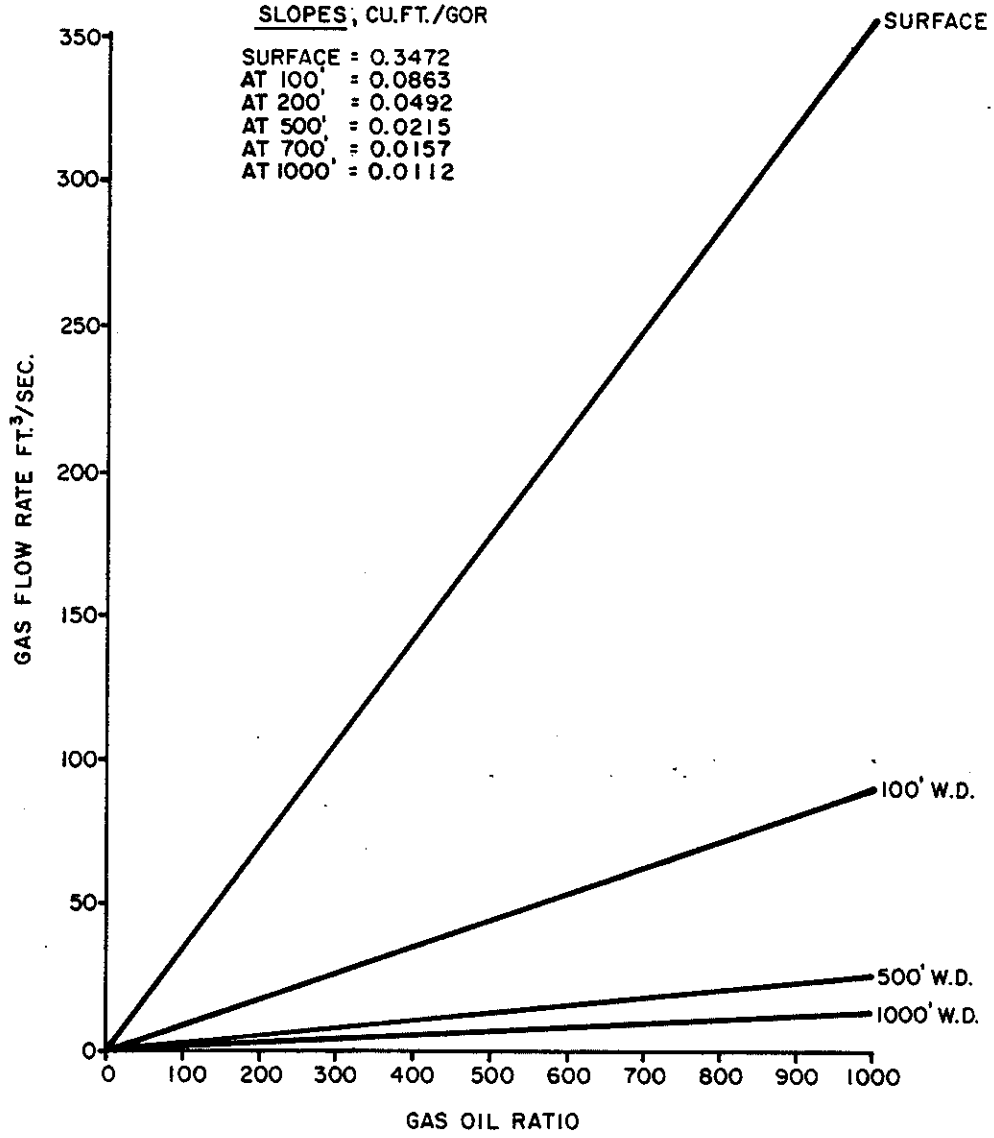

(FROM APPENDIX TABLE A 2.1-11)

U.S. DEPARTMENT OF THE INTERIOR MINERALS MANAGEMENT SERVICE	SCALE: NONE	TITLE OF DRAWING:
	DRAWN BY: RV DATE 8-14-85	GAS FLOW RATE VS GOR AND
Brown & Root Development, Inc. HOUSTON, TEXAS	CHECKED BY: ANLS DATE 8-20-85	WATER DEPTH
	APPROVED: EES DATE 8-21-85	
	CUSTOMER APPROVAL	CONTRACT NUMBER XC-0030 / DRAWING NUMBER FIGURE 3.1-11

1. AGF/30"-50m
2. BB/30"-50m
3. AGF/30"-100m
4. BB/30"-100m
5. AGF/30"-200m
6. BB/30"-200m
7. BB/24"-200m
8. P*, 24"
9. P*, 30" & 24"-30" COMBO
10. AGF/24"-50m
11. BB/24"-50m
12. AGF/24"-100m
13. BB/24"-100m
14. AGF/24"-200m

AGF = NEOTECH'S CALCULATIONS
BB = BEGGS & BRILL CORRELATION

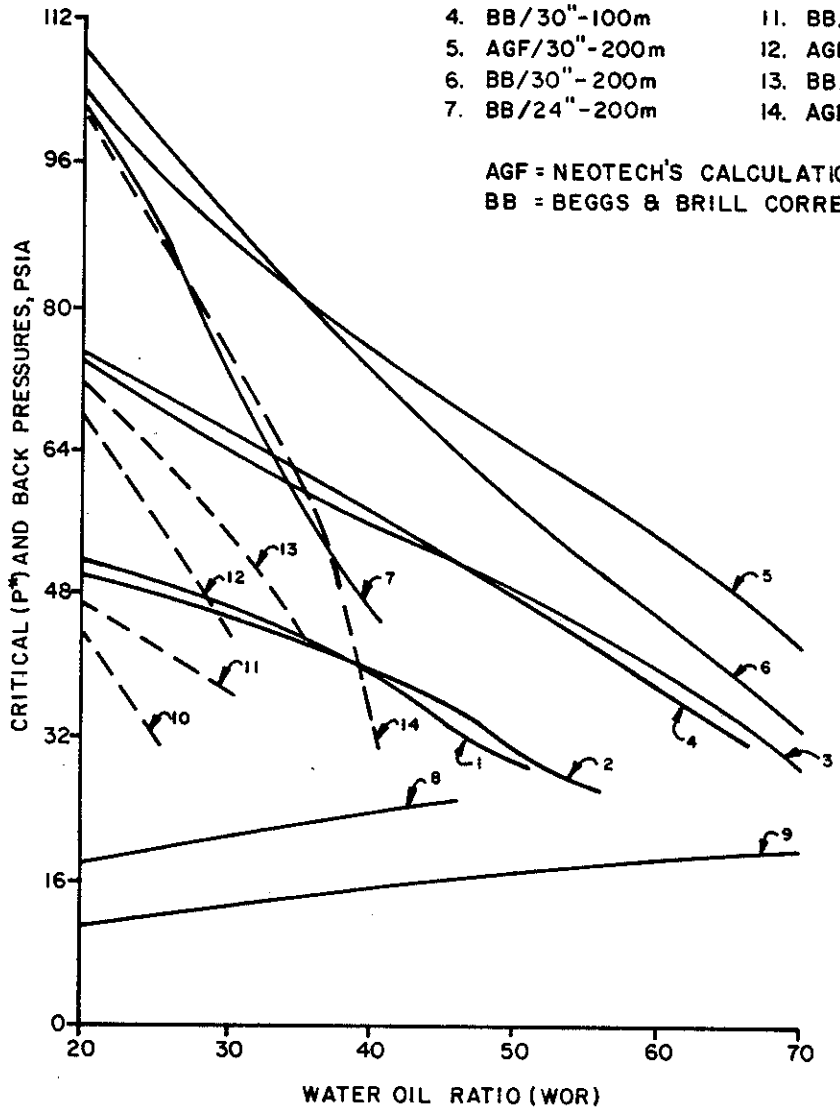

U.S. DEPARTMENT OF THE INTERIOR
MINERALS MANAGEMENT SERVICE

Brown & Root Development, Inc.
HOUSTON, TEXAS

SCALE: NONE	TITLE OF DRAWING: CRITICAL AND BACK PRESSURES VS WATER OIL RATIOS TOPHAM ET AL [29]
DRAWN BY: RV DATE 8-14-85	
CHECKED BY: ANLS DATE 8-20-85	
APPROVED: EEB DATE 8-21-85	
CUSTOMER APPROVAL	CONTRACT NUMBER XC-0030 / DRAWING NUMBER FIGURE 3.1-12

1 a b

3, 2

SECTION 3.2

DESCRIPTION OF COLLECTION

TANKER AND SUPPORT VESSELS

FINAL REPORT

0341X

3.2 Description of Collection Tanker and Support Vessels

3.2.1 Conversion Requirements

3.2.1.1 Basic Requirements (Ship)

Vessel storage capacity is based on handling 1.5 million barrels per day of oil/water mixture in settling tanks with 30 minutes residency equaling 40,000 barrels of volume, and 14 days storage of separated oil equaling 420,000 barrels, thus requiring a tankage of 460,000 barrels or about 66,000 tons. The only vessels available for conversion for this project with the required amount of tankage are crude oil tankers. Therefore all further discussion will be based on using a tanker as the basic vessel. A tanker that is 10 years old or less will have segregated ballast tanks with a capacity of about 20,000 tons. If 10,000 tons of added equipment is assumed, then the minimum size of tanker required will be 96,000 tons deadweight. Other desirable features of the vessel would be an inert gas system and heating coils, although both could be added later if required in the final specification.

3.2.1.2 Availability

There are numerous tankers available for purchase at the present time, and this situation is expected to continue into the 1990's, although very few in the size range required, i.e. 80,000 to 100,000 tons deadweight. The most common size of ten year old tankers is from 200,000 to 350,000 tons deadweight although sizes from 120,000 to 150,000 tons are not uncommon. Tankers of equal to or less than 100,000 tons are generally more than ten years old, or were purpose built for a specific trade since the present glut of tanker tonnage began, and are not available for purchase. The optimum tanker to be chosen from the point of view of availability, price and age would be about 120,000 tons deadweight. The purchase cost of such a tanker with inert gas and heating coils is currently market priced at 6 to 7 million dollars. Additional vessel cost details will be provided later in Section 4.2.

3.2.1.3 Hull/Structural Modifications

The major modification to the vessel will consist of the addition of a turret/moon pool, the addition of bulkheads and flats to provide thruster compartments, the addition of a helideck for transferring supplies and personnel, the addition of shield walls and/or covered walkways on the main deck for personnel protection, and the modification of below deck cargo and ballast piping to allow for the increase in ballast tankage and the oil/water separation. A general arrangement of the main deck arrangement is shown on Figure 3.2-1.

The number of azimuthing thrusters required to hold the bow quarter of the vessel into the wind in conjunction with the anchoring system is four. These will be located in the aftermost wing cargo tanks port and starboard and will be totally self-contained in cannisters except for the power generation. Compartment bulkheads and flats for access and maintenance must be provided for the thrusters and the remaining portion of the tanks can be used for ballast as necessary.

The turret will consist of two structural parts, a fixed cylinder welded into the hull of the vessel, and an open-ended rotating cylinder containing the six mooring winches for the ship. The opening in the rotating part of the turret will be large enough for the collector to pass through, and to accommodate the six mooring winches around the perimeter. Details of the turret and the winch layout are illustrated on Figures 3.2-2 and 3.2-3. The approximate size of this type of turret would be about 66 feet diameter (Fig. 3.6-28). The hydraulic mooring winches will be in covered compartments which can be protected with waterspray during final positioning over the blowout. The helideck will be added over the afterdeck of the converted vessel in a similar manner to many tankers which have been converted to offshore work. To protect personnel and equipment on the main deck from any surface fire, covered walkways and/or shield walls must be provided between the accommodation area and the equipment. The walkways or shield walls can be insulated on the inboard side and the outboard side can be protected with water

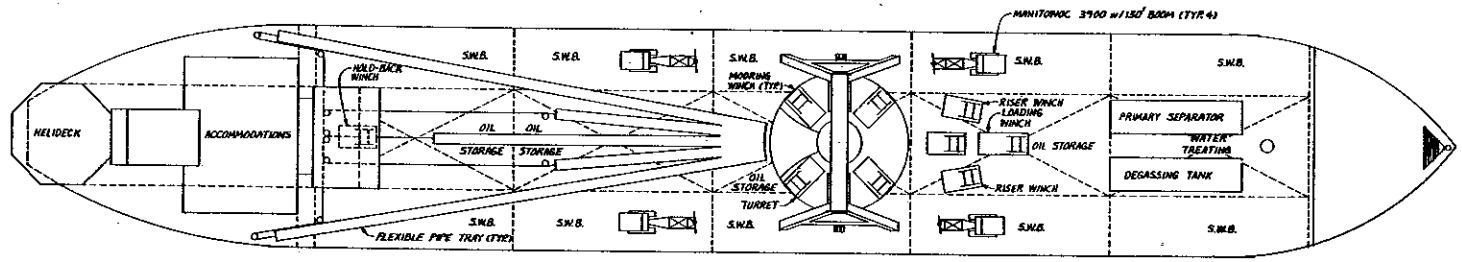

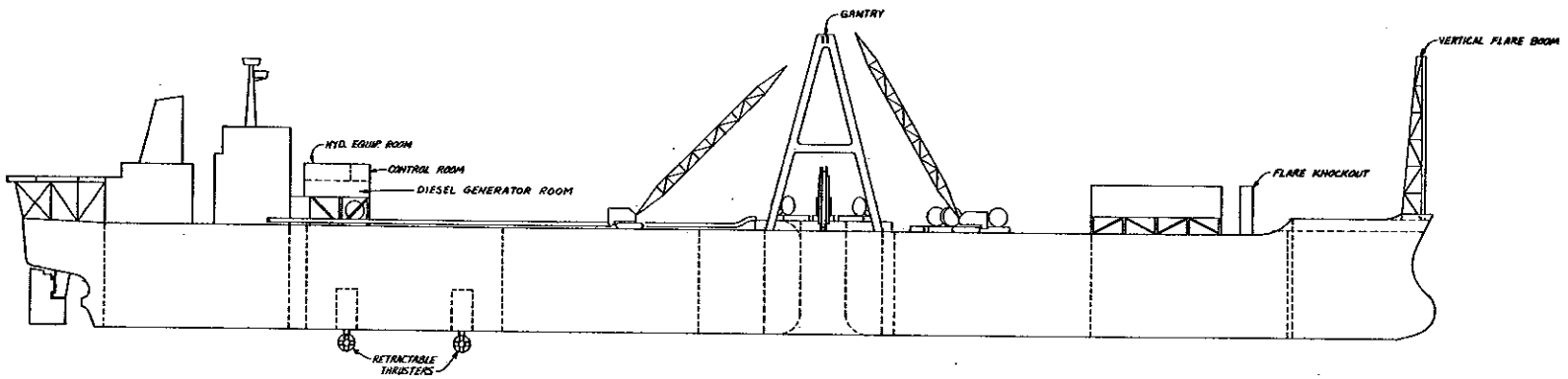

NOTE: FIRE FIGHTING & WATER SPRAY SYSTEMS NOT SHOWN FOR CLARITY.

NOTES

REVISIONS	BY	DATE

REVISIONS	BY	DATE

Brown & Root Development, Inc.
BARDS
HOUSTON, TEXAS

DRAWN BY: J. BRUCE
DATE: 8-7-86
CHK'D BY: D.H.
DATE: 8-20-86
SCALE: 1:400

APPROVED
APPROVED
SEAL

TITLE OF DRAWING: SUBSEA COLLECTOR VESSEL
PLAN VIEW AND PROFILE
NAME OF CLIENT: U.S. DEPARTMENT OF THE INTERIOR
MINERALS MANAGEMENT SERVICE

CONTRACT NO. XC-0030
DRAWING NO. FIGURE 3.2-1
SHEET OF

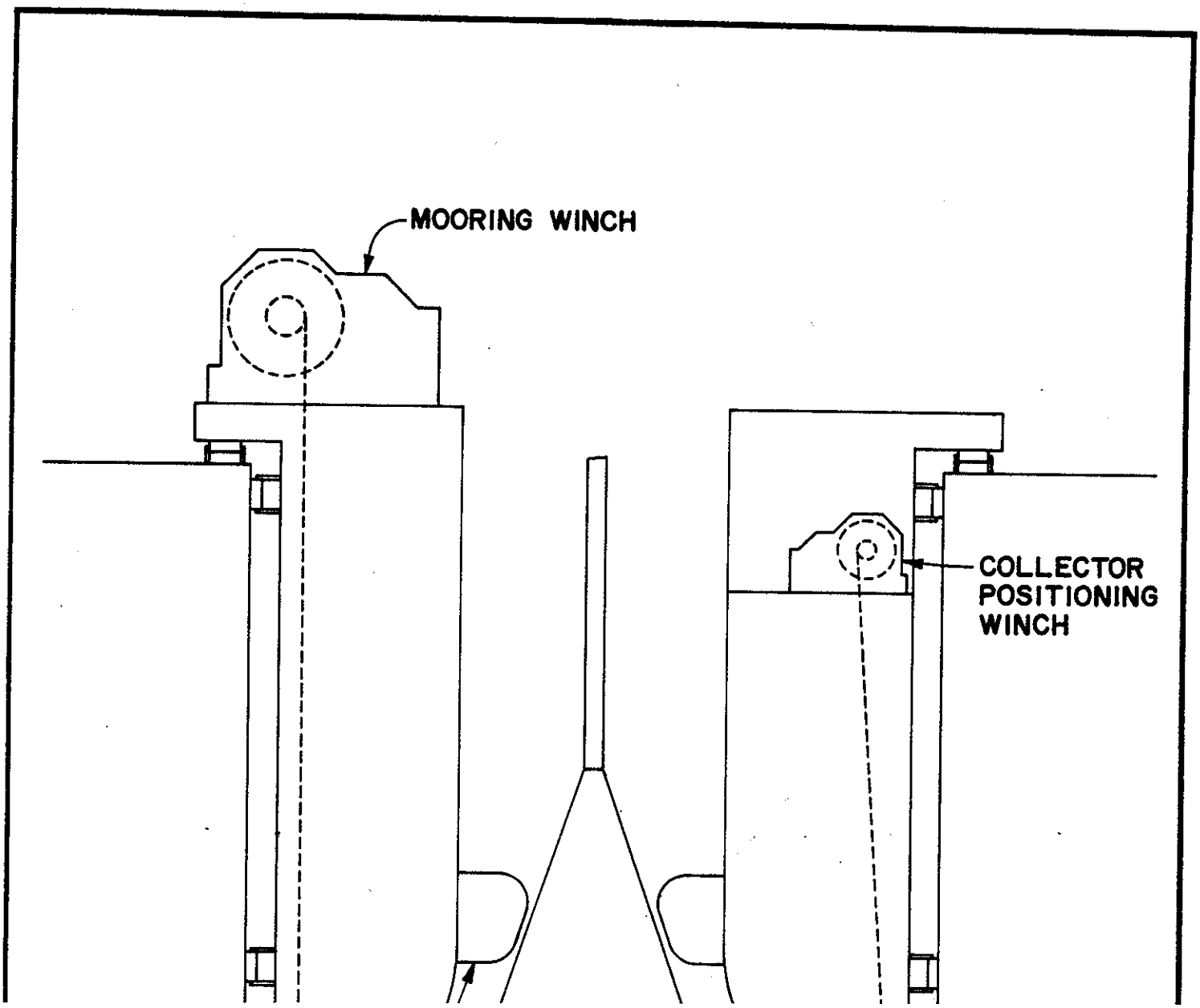
MOORING WINCH
COLLECTOR
POSITIONING
WINCH

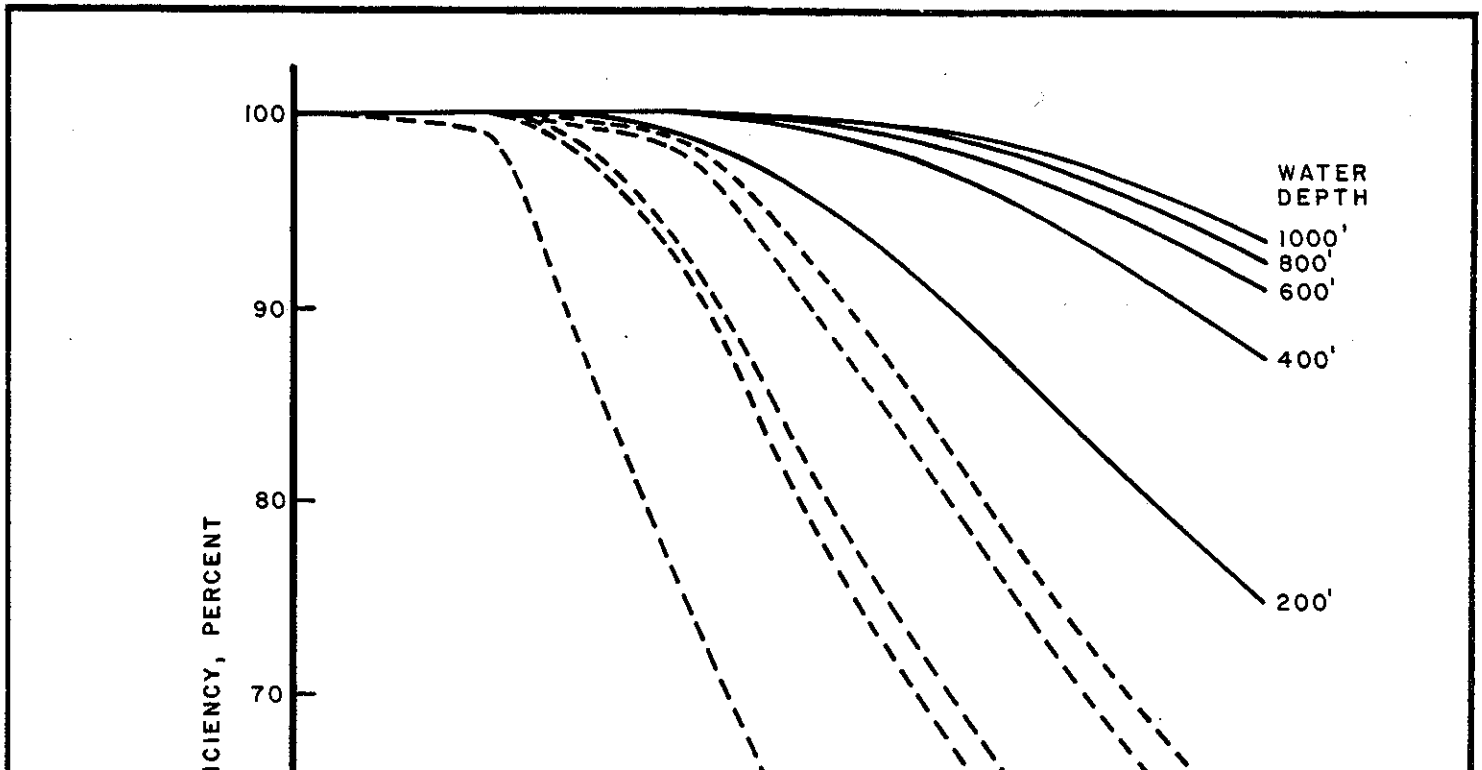
100
90
80
70
WATER
DEPTH
1000'
800'
600'
400'
200'

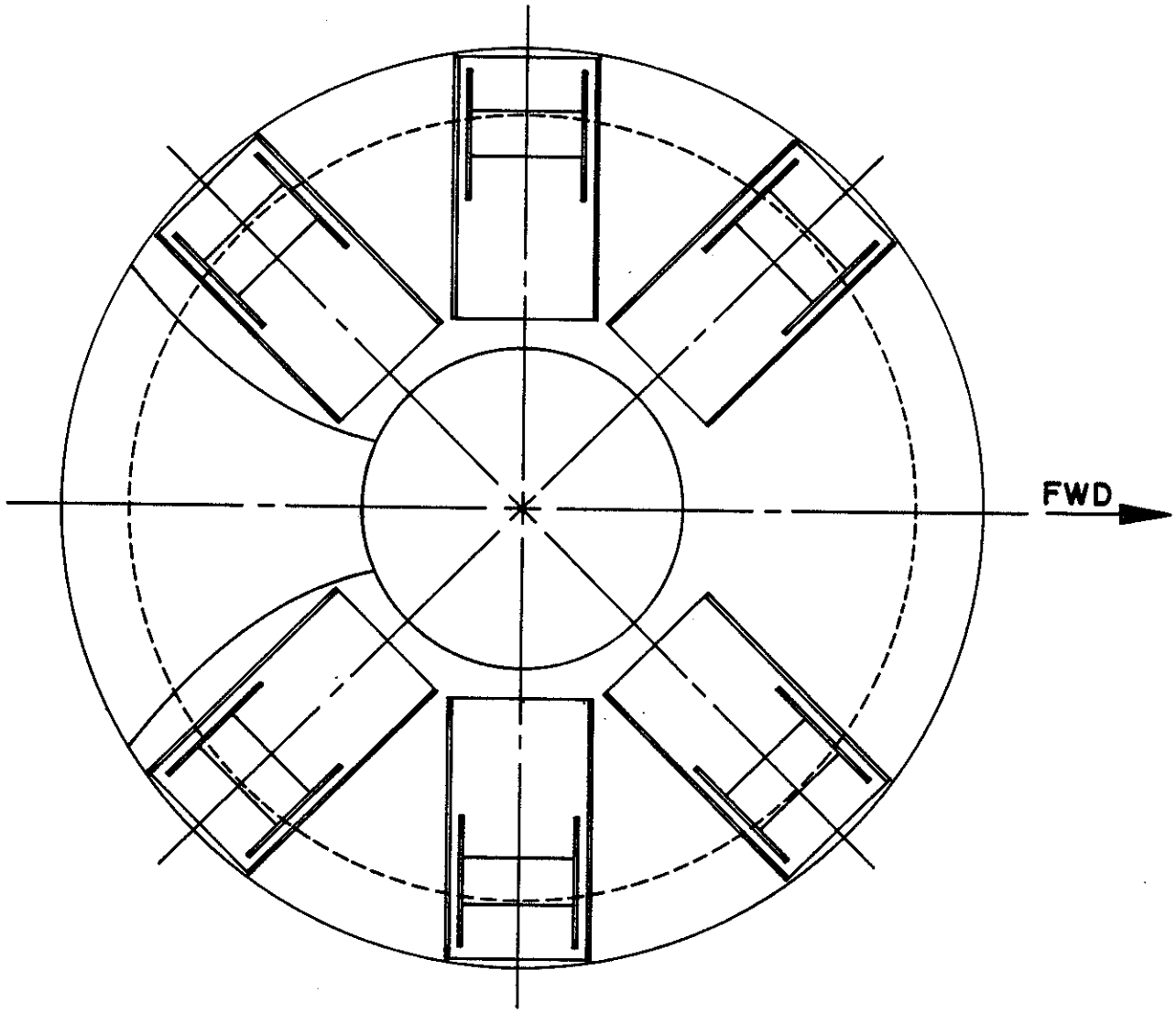

U.S. DEPARTMENT OF THE INTERIOR
MINERALS MANAGEMENT SERVICE

Brown & Root Development, Inc.
HOUSTON, TEXAS

SCALE: 1/16" = 1'-0"	TITLE OF DRAWING: PLAN AT TOP OF TURRET SHOWING MOORING WINCH LOCATIONS
DRAWN BY: JKR DATE: 7-26-85	
CHECKED BY: D.M. DATE: 8-16-85	
APPROVED: EEJ DATE: 8-20-85	
CUSTOMER APPROVAL	CONTRACT NUMBER: XC-0030
	DRAWING NUMBER: FIGURE 3.2-3

spray. Protection of the steel hull of the vessel from the heat of a fire will be provided by filling the wing tanks with water and continuously overflowing through the hatches in addition to the waterspray system. This will require that the ballast and cargo tank piping be modified in order to convert the existing wing cargo tanks to salt water ballast tanks.

3.2.1.4 Moon Pool

In order to minimize the effects of vessel motion and wave action on the collector and riser, the system should be deployed through a moon pool. Because the crew will be accommodated aft, the moon pool must be situated in the forward part of the vessel to keep the personnel away from any resulting hazard. The need to keep the wind coming from the bow quartering necessitated the fitting of the vessel with a turret mooring system and accordingly the moon pool was placed through the center of the turret. With thrusters operating, the vessel can be held within $\pm$ 20° to 45° of the wind heading, and analysis of vessel motions at the proposed turret/moon pool location show that the riser system with compensation can operate in the motions caused by waves resulting from a Beaufort 9 wind.

3.2.1.5 Accommodations & Operations Areas

The vessel will require a crew for operating the vessel plus additional personnel for rigging and deploying the riser and collector system. A modern tanker crew usually consists of a total of thirty (30) officers and men, while two shifts of 6 men each will be required to deploy the riser. The tanker crew are generally housed in one man cabins, with the captain and chief engineer having a day room in addition to a bedroom. If the officers, engineers and chief cook's accommodations remain untouched, and all other cabins are converted to two-man cabins, a total of fifty one (51) men could be accommodated against a required complement of forty-two. For sustained operation over a blow out, crew changes can be accomplished by helicopter, utilizing a nearby platform helideck as a transfer point from a crew boat if the blow-out occurs too far offshore for the helicopter range.

3.2.1.6 Stability

The vessel will have adequate stability throughout all loading conditions even with 10,000 tons of equipment added above the main deck. For a typical tanker in the proposed deadweight range (in this case 120,000 tons deadweight) adding 10,000 tons of equipment on the upper deck would raise the vertical center of gravity by about 2 ft in the full load condition, which will still leave the vessel about 14 to 15 feet of G.M. Because the stability increases with lesser drafts, the full load condition is the worst case scenario for stability. A typical example of a tanker with a high deck load is an early production/ storage facility based on a converted tanker. Such vessels, of which many are in service, typically have up to 10,000 tons of process equipment on the main deck, and are able to stay on station in wind and waves up to Beaufort 10.

3.2.1.7 Diving/R.O.V. Support Facilities

Diving and R.O.V. (remote operated vehicle) support may be required during the positioning of the tanker and the collector over the wellhead. However it is also likely that the divers and R.O.V. equipment may arrive at the blow out location prior to the arrival of the tanker and perform a damage survey and provide assistance in the removal of the debris from around the wellhead should it exist. For this reason it is planned that these facilities will be provided from another support vessel at the site and not from the collection tanker.

3.2.1.8 Handling Equipment Configuration

A detailed description of the collection riser is provided in Section 3.4 of this report. The discussion in this section is therefore limited to the operation of the riser handling equipment.

The various lengths of riser will be laid in troughs with rollers in the bottom and will be banded together in pairs for ease of installation. The riser lengths will be pulled towards the moon pool with a hydraulic winch and will be restrained with another hydraulic winch at the other end. This procedure is illustrated on Figure

3.2-4. The flanges of the risers will be made up to the collector which will be held in place by hydraulic locks. The collector locks will be released and the collector with the attached riser will be lowered down using the hold back winch. The risers will pass over a curved guide plate to prevent kinking or buckling. The load from the riser and collector will then be transferred to the two riser handling lines shown on Figure 3.2-5 and another section of the riser will be pulled similarly into place and attached to the first. When the desired length of riser has been deployed, the swivel and hoses will be lowered down with the load winch and the final connections made. The collector and riser will now be suspended totally from the load winch with the collector about 50 feet above the bottom. After the vessel is moved over the blowout the total system will be lowered with the load winch. A total of four air tuggers of 1000 lb capacity each should be provided which can be positioned and welded in place by the operating crew. These air tuggers will be used to assist in holding the risers in place during joining the flanges.

3.2.2 Safety System Considerations

3.2.2.1 Ventilation

Ventilation of the accommodation area on an existing tanker is by means of a forced air system, designed to maintain a net positive pressure inside, with external air being drawn from near the top of the aft side of the accommodation block through a heating/air conditioning unit, and distributed by ducting to all compartments. The system is capable of being manually shifted to total recirculation of air should conditions warrant. As it is intended that the collector vessel be moored with its bow quarter to the wind, the presence of hazardous vapors or gasses in the area of the air intakes is unlikely. However, safety of personnel demands that the system be modified to switch to recirculating internal air

automatically should any hazardous gasses be detected by sensors placed in the vicinity. The crew could survive for several hours on totally recirculated air if necessary, with the system being re-set manually to normal operations at the discretion of the person in charge.

The non-air conditioned portion of the machinery space is supplied with air from manually switched fans which will have to be modified to automatically shutdown in the event of hazardous gasses being detected. Should this occur the generators located in the machinery space would shut down due to lack of combustion air and result in the loss of ship's service power. Emergency power supply must be provided as a backup system.

Existing cargo tanks are vented to the main deck from one or more openings which are fitted with pressure/vacuum valves designed to open at plus 3 psi or minus 1 psi. During collection operations, the oil filling the tank will cause flammable vapors to be emitted to the atmosphere. The tanker is designed such that no ignition source is present to cause combustion. The collection vessel will also be designed this way but an external ignition source may be present if a fire at the blowout is not extinguished. The tank venting system should therefore be modified to collect all vented gasses into a common header which can be led forward and up the flare boom.

3.2.2.2 Emergency Vessel Abandonment and Alarm

Before modification the tanker will have automatic fire alarms, but no alarms for the presence of dangerous gasses. These latter alarms will have to be added. The alarms will register on the bridge as well as locally, and any decision to abandon ship will be taken by the Master. The signaling system for abandoning ship currently fitted on tanker vessels is considered adequate for the modified vessel.

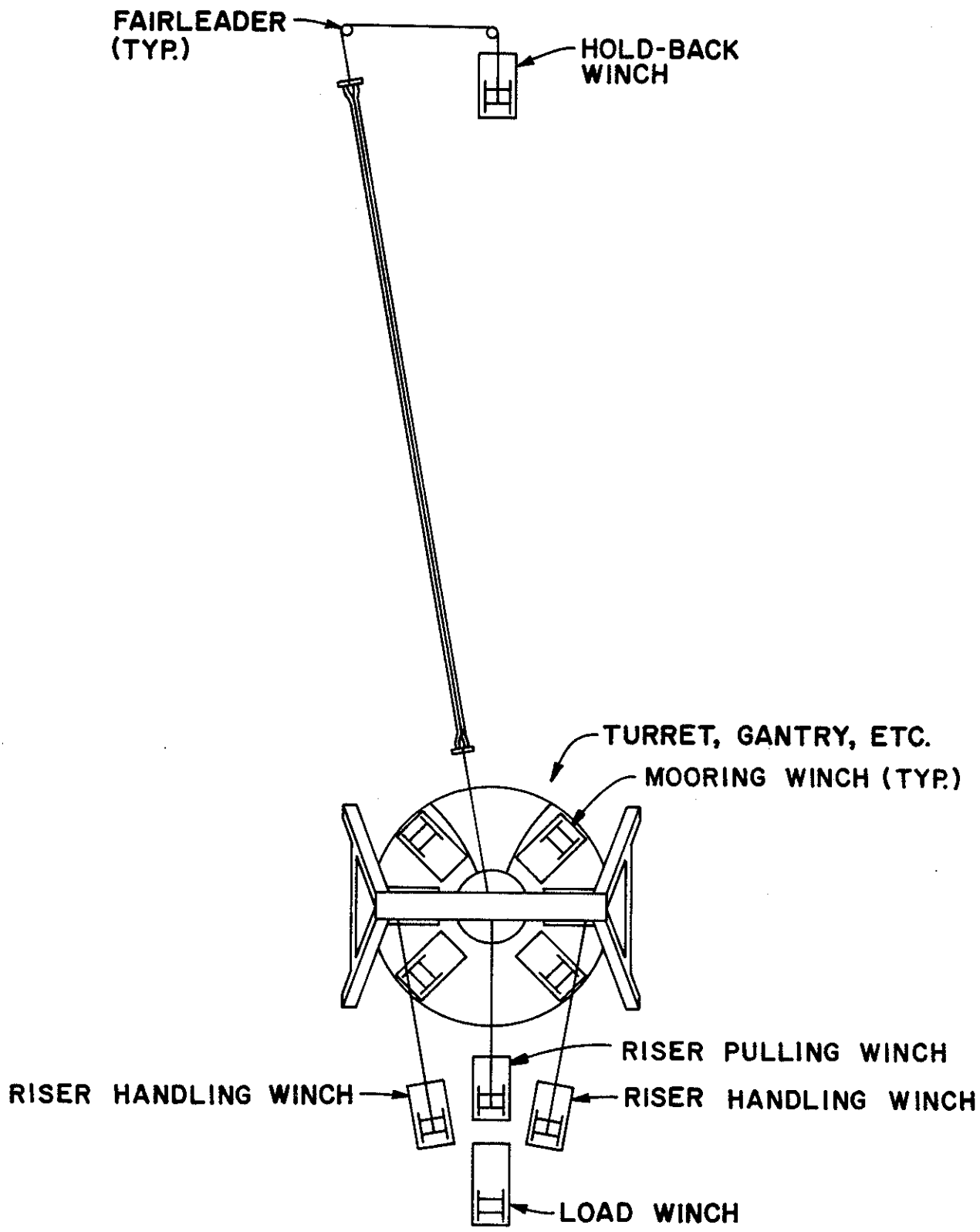

U.S. DEPARTMENT OF THE INTERIOR
MINERALS MANAGEMENT SERVICE

Brown & Root Development, Inc.
HOUSTON, TEXAS

SCALE: NONE	TITLE OF DRAWING: RISER HANDLING ARRGT. PLAN AT MAIN DECK
DRAWN BY: JKR DATE 7-26-85	
CHECKED BY: D.M. DATE 8-16-85	
APPROVED: EEP DATE 8-20-85	
CUSTOMER APPROVAL	CONTRACT NUMBER XC-0030 / DRAWING NUMBER FIGURE 3.2-4

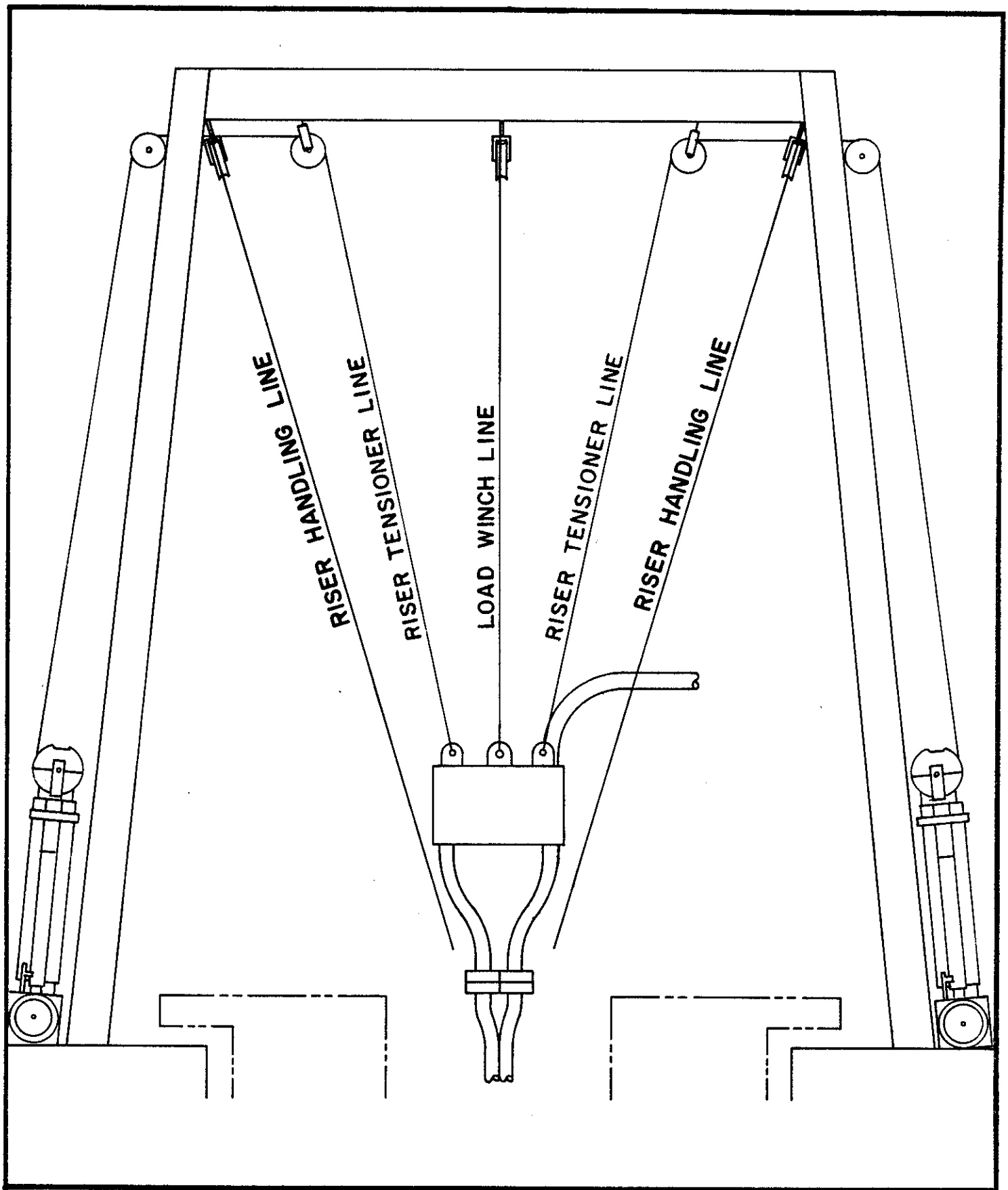

U.S. DEPARTMENT OF THE INTERIOR
MINERALS MANAGEMENT SERVICE

Brown & Root Development, Inc.
HOUSTON, TEXAS

SCALE: 1/16" = 1'-0"	TITLE OF DRAWING: RISER HANDLING ARRGT. SECTION THROUGH GANTRY.
DRAWN BY: JKR DATE: 7-26-85	
CHECKED BY: D.M. DATE: 9-16-85	
APPROVED: EEP DATE: 8-20-85	
CUSTOMER APPROVAL	CONTRACT NUMBER: XC-0030
	DRAWING NUMBER: FIGURE 3.2-5

If a decision is taken to abandon ship, the crew must be protected from fire, explosion or poisonous gasses, both while entering the lifeboats, during lowering of the boats and while moving away from the vessel. Current regulations require that a tanker carry one lifeboat on each side of the vessel, one of which is to be motor propelled. The lifeboats are of the open type and the crew are exposed to the elements during embarkation. There are several covered lifeboats available, all of which have been developed for use in offshore oil exploration, and at least one of these offers remote controls for the shutdown of equipment. Protection against fire is provided and each lifeboat has its own air supply. Two lifeboats carrying from 75 to 125 persons provided for the converted vessel with covered access should provide the best crew protection available.

3.2.2.3 Life Support

Personnel on board the vessel must be protected against the effects of fire and toxic gasses in the event of a total shutdown of machinery and an inability to exit from the accommodation area, until assistance can be rendered from outside sources.

In the event of fire outside the accommodation area the sole protection of the crew is provided by the insulation of the external bulkheads. A sustained fire outside the accommodation area in conjunction with a machinery shutdown however, is extremely unlikely and assistance with firefighting from firefighting vessel or even the anchor handling tugs could be provided in a matter of minutes. The existing bulkhead insulation is designed to withstand a maximum temperature of about 1700°F for 60 minutes and is believed adequate for withstanding a temperature of 2000°F for the short fire duration anticipated.

In the event of total machinery shutdown in conjunction with dangerous gas concentrations the crew could retreat to a central area where a built-in breathing system (B.I.B.S.), similar to those on submarines, could be provided until the vessel can be removed from danger.

3.2.2.4 Hull and Superstructure Cooling

The hull of the vessel needs to be protected against heat from contact with flames and radiated heat while the superstructure needs to be protected only against radiated heat. Lloyd's Rules for Construction and Classification of Firefighting Ships give requirements for a waterspray system on ships operating in "Close Proximity" to a fire. Based upon these rules, it is estimated that about 4,500 g.p.m. would be required to comply with this rule requirement, although further study needs to be performed to determine the exact quantity of cooling water required.

In addition to the water spray, the outboard tanks will be filled with water ballast. If the hatches of these tanks are left open, the ballast pump could be kept running causing water to spill over the hatch coamings giving additional protection. This system could be used in conjunction with temperature sensors, and only those tanks where the water temperature is rising need be overflowed.

Although the vessel is equipped with fire monitors, these are not as useful as spray for cooling purposes and should be kept in reserve for fighting onboard fires.

The existing ballast pump should have sufficient capacity to handle the overflowing of the ballast tanks, with one cargo pump being replaced or converted as a standby pump, and one additional pump can be added for the water spray.

3.2.2.5 Rapid Disconnect from Mooring and Collector Riser System

When operating, the vessel will be held in place by 6 mooring lines attached to anchors, and the collector will have 4 mooring lines making a total of ten lines which must be disconnected to totally evacuate the vessel from the blowout area. By paying out line on some mooring winches and taking up on others the vessel could be moved about 500 feet away from the blowout area in any direction

before disconnecting should it become necessary. Disconnection could be accomplished in minutes by means of acoustically actuated explosive bolts, but this has the disadvantage of leaving the anchors on the ocean bottom where they must be recovered by means of anchor pendants attached to buoys and reattached to the mooring lines with diver assistance before re-deploying. Alternatively 10 spare anchors could be carried, but this seems to be an expensive option, and still requires the same amount of time to attach them. A similar method of unmooring the vessel and collector would be to have an explosive bolt in the mooring line itself with the portion of the line attached to the anchor having a buoy that would float to the surface with the line. Re-attaching the lines would still require diver assistance but would eliminate having to recover the anchors. Another advantage of this method is that the anchors could be deployed at the blowout site before the tanker arrived on the scene from a multi-purpose support vessel.

The traditional method of recovering anchors offshore is to lift the anchor with its pendant line using an anchor handling tug, and carrying it to the vessel while the wire is wound on the winch drum. This method requires about 1 hour per anchor in sea states not exceeding those associated with Beaufort 6 winds and may not be possible in higher sea states. In any event the time required for recovering 10 anchors (i.e. 10 hours) exceeds the 8 hour design limitation.

To summarize, methods are available to rapidly disconnect the anchoring/mooring systems which are in commercial use today, and the method selected could allow for the ease of redeployment also while the desired speed of release is maintained. Explosive disconnects could be built into any system to provide instantaneous release.

As far as the collector is concerned, the anchors can be similarly released and the riser itself can be recovered by the wirelines passing through the A-frame derrick over the moon pool. The collector and riser can be raised up to 50 feet and the vessel moved out of danger before completing recovery. It should be noted that the system will have to be almost completely recovered to allow the anchors to be re-attached.

Additional discussions and alternate procedures for abandonment are given in Section 3.6.5.6.

3.2.2.6 Inerting System

International conventions require that existing tank vessels exceeding 70,000 deadweight tons built before June, 1983, be fitted with an inert gas system. This means the vessel selected for conversion should have an inert gas system installed, or the selection of a tanker could be limited to those that have. Such a limitation would still leave a large pool of vessels from which to make a selection.

An inert gas system fills the oil cargo tanks with gas from the top, while the oil is pumped from the bottom during discharge. The inert gas is intended to prevent explosions during tank cleaning operations which have occurred in the past when washing with salt water. Although tank cleaning will not be done during oil recovery operations, it is assumed that the tanks will be cleaned during return to port, and that they will be inerted prior to washing.

3.2.2.7 Location of Water Suction Sea Chests

The existing sea chests on any modern tanker will be located in the engine room, which in the case of a tanker in the desired deadweight range would place it about 350 feet from the moonpool. The sea chest would have to be located below the vessels light water line, or in

this case about 15 feet above base line. The minimum operating draft of the vessel in the vicinity of the sea chest will be in the range of 30 to 35 feet which would place the sea chest at a depth of 20 to 25 feet below the water where the presence of oil slicks is very unlikely.

The location of the sea chest is of concern because oil may be sucked into and be discharged from one of the fire or water spray pumps thereby contributing to a fire rather than controlling it. Experience at the Ixtoc I blowout indicates that this will not be a problem. There a fire pump was run within 300 feet of the blowout with the suction 5 to 10 feet below the water, and the discharge used to cool hydraulic lines exposed to the fire. No secondary fires were caused during this operation.

3.2.2.8 Surface Flare Suppression and Extinguishing System

The fire pump system on board the tanker will be used for the extinguishing of onboard fires, providing a water curtain to prevent overheating of the hull and structure, providing a deluge capability to flood-extinguish a fire, and providing a water mist curtain to suppress burning gas and oil fires on the ocean surface. It is important that the burning gas fires on the ocean surface not be extinguished to prevent an explosive accumulation of gasses.

3.2.2.9 Preventing Ignition From Shipboard Apparatus

There are few sources of ignition on existing tankers in way of the cargo tanks due to the concern of Governments and regulatory bodies about potential sources for explosions. The existing equipment which may be hazardous are the deck winches, hose handling davits, and deck floodlights. The first two can be rendered inoperative before entering the danger zone and the lights must be repositioned as necessary to place them the farthest distance from combustible gasses while still providing illumination.

Equipment which will be added to the vessel for operation as a collector ship which may be a source of ignition includes the mooring winches in the turret for both the vessel and the collector, anchor handling cranes, an air compressor skid, derrick drawworks, and riser handling equipment. The anchor handling cranes will be used to pass the anchors to anchor handling vessels before entering the danger zone and can then be shut down so as not to present a hazard. The riser handling equipment will be used to lower the riser to within about 50 ft of the bottom a safe distance away from the blowout, with final positioning being made by the derrick. The mooring winches must be operated during final positioning over the blowout and must be made explosion proof. Hydraulic winches are intrinsically safe and would seem to be the obvious choice. The hydraulic pumps can be remotely located in the stern and the piping led to the winches via swivels at the turret. The piping should be insulated or water-cooled. The fluid should be water based. To avoid extensive piping on the deck, a single supply and return can be led to a manifold in the turret, and because more than one winch may be operated at a time the hydraulic pumps and piping need to be sealed accordingly. The air compressor will be diesel driven and, if located on the deck forward of the personnel accommodation, would need to be protected by water spray which would cause an undesirable amount of water to be drawn into the compressor. To avoid this problem the compressor can be located below the helideck where water spray protection is not required because of the distant location from the blowout. The draw works will need to be operated during final positioning of the collector system and can be hydraulically driven in a manner similar to that of the mooring winches and will therefore not constitute a hazard. Moreover, all the equipment in the moonpool area can be sprayed with water. The diesel driven generators installed on the main deck must be protected by a water curtain.

3.2.3 Ship Service Systems

3.2.3.1 Propulsion System

There are two possible propulsion systems for tankers in the size range proposed for the collector system. One is a steam turbine plant driving a single screw through a set of reduction gears, and the other a slow speed reversible diesel engine directly driving a single screw. The propeller will almost certainly be a fixed pitch type. Neither system holds any particular advantage over the other and both systems are very reliable. As soon as the riser has been deployed, the main propulsion system will be shut down, and position keeping will be by means of anchor wires and azimuthing thrusters powered either by steam from the main boilers or by electric motors in the case of the diesel driven ship. Vessel speed in the ballast condition should be in the range of 16 to 17 knots for either propulsion system. No modification to the propulsion system is anticipated except in the case where a power take-off is required for the thrusters.

3.2.3.2 Monitoring, Control, Data Acquisition and Navigation Systems

Monitoring and control of all propulsion and ship service systems is performed from a centrally located control room except for the cargo and ballast systems which have a separate control room. Additional monitoring is provided at the navigation bridge and the only system which can be controlled from the bridge is the steering gear which will not be used during collection operations. Additional equipment such as thrusters and electrical generators can be monitored from the navigation bridge and engine control room respectively; however, additional pumps and new and existing fire protection systems need to be monitored and controlled from a new control room located above the existing pump control room, but with enough height and width to give a clear line of sight to the fire control effort. This control room should also contain joy stick controls for fire monitors and temperature readings from sensors placed about the vessel and in the

outboard water ballast tanks. Additional facility will be required for the dynamic positioning system, acoustic positioning reference system (APRS), the sonar, and the video systems for the positioning of the vessel and the collector over the blowout. The controls for the collector anchors will have to be in the same location. Control of the R.O.V. could be from this location, or from another vessel if external communication were also provided.

3.2.3.3 Ballasting

The tanker will be provided with one ballast pump before modification which will be sufficient to fill the wing tanks with ballast before arriving at the scene of the blowout. However for continuous overflowing of the ballast tanks for cooling purposes a standby pump of similar capacity should be provided.

Due to the various international agreements such as MARPOL and SOLAS and various protocols thereto, it is difficult to state the quantity of ballast tanks or their location on a "typical" tanker. It is probable that no more than two pairs of wing ballast tanks are piped for water ballast. Connections must therefore be provided off the ballast main to each wing tank, which is not a ballast tank, and be fitted with valves remotely operated from the pump control room. Cargo piping to any wing tanks will have to be removed or blanked off. The cargo pump control console will require extensive changes to accommodate this modification.

3.2.3.4 Power System

The power generating and distribution system is not the same for all vessels. United States vessels utilize a 480 volt, 60 Hertz distribution system and European vessels utilize a 440 volt 50 Hertz system. Additional generating capacity requirements resulting from equipment additions to the vessel will have to match the existing electrical system on the selected vessel unless the additional power requirements are to be supplied from a totally self-contained external source.

The estimated horsepower required for the added thrusters winches and collector deployment equipment is estimated to be 27,000 HP or 18,000 KW which, due to space requirements, must be added above deck. This can be accomplished by adding a generator module complete with switchgear about ten feet above the deck with the output totally dedicated to these additional requirements. The size of this module would be approximately 60 feet by 50 feet.

3.2.3.5 Provision for Using Blowout Gas as Supplemental Fuel

In order to use blowout gas as fuel for the ship service systems, modification must be made to boilers in the case of a steam driven ship or to diesel engines in the case of a diesel powered ship. The machinery must be capable of burning heavy oil, diesel, or gas if so modified and does not seem to be cost effective considering the cost of the process equipment which would be needed to make the gas usable. For additional comments see Section 3.5.1.5.

3.2.4 System Descriptions/Specifications

3.2.4.1 General Ship Service Systems

Those existing ship service systems which are provided for the benefit of the crew will have to be checked for their adequacy due to the increased crew size. These systems include potable water, sanitary system, messing and galley provision, fire protection, lighting, and heating and ventilation. Of these it is probable that only the water maker for potable water and the marine sanitation device will have to be increased in size for the additional crew. Generating capacity will of course be increased for the thrusters and winches, etc. but it is anticipated that this will be provided by an independent generator module.

The remaining ship service systems such as compressed air and bilge systems will remain essentially unchanged except for minor relocations of piping.

3.2.4.2 System Hardware to be Added

The following equipment will need to be added to the tanker to convert it for use as a collection vessel. All of the equipment described is available commercially in the United States.

a) Heliport, suitable for a Sikorski S6IN helicopter, complete with refueling facility and U.S. Coast Guard approved. One required.

b) Riser handling gantry 120 feet high, 75 feet clear span, complete with three swivel blocks, the center one for 3-inch wire rope and each of the two side blocks for 2-inch wire rope. One required.

c) Load winch, minimum pull 400,000 lbs on bare drum at stall, drum sized for 300 feet of 3-inch of wire, hydraulically operated, remotely and locally hydraulically controlled. One required.

d) Riser handling winch, minimum pull 250,000 lbs on bare drum at stall, drum sized for 300 feet of 2-inch dia. wire rope hydraulically operated, remotely and locally controlled. Two required.

e) Hold-back winch, minimum pull 550,000 lbs on bare drum at stall, drum sized for 1,500 feet of 3-inch dia. wire rope. Hydraulically operated, remotely and locally hydraulically controlled. One required.

f) Riser pulling winch, minimum pull 50,000 lbs on bare drum at stall, drum sized for 1 1/2-inch dia. rope 600 feet long. Hydraulically operated, locally hydraulically controlled. One required.

g) Mooring winch, minimum pull 550,000 lbs on bare drum at stall, capable of spooling approx. 10,000 feet of 3-inch dia. wire rope, hydraulically operated, remotely and locally hydraulically controlled. Six required.

h) Collector anchoring winch, minimum pull 50,000 lbs on bare drum at stall, drum sized for 1 1/2-inch dia. wire rope 2500 feet long. Hydraulically operated, remotely and lcally hydraulically controlled. Four required.

i) Thruster, 4000 horsepower electrically driven with azimuthing retractable controllable pitch propellers, supplied in watertight steel cannisters complete with all auxilliaries. Four required.

j) Crane, crawler, 130 foot boom, capable of lifting 40,000 lbs at 100 foot radius. Four required.

k) Diesel generator module, self-contained with switchgear and controllers and four generators of 4500 KW capacity each for thrusters, winches and other new equipment.

l) Hydraulic equipment module complete with hydraulic pumps for winches and export hose reel.

m) Turret, 84 feet maximum outside diameter with approx. 30 feet diameter moon pool in the center (see Figure 3.6-28), thrust bearing rings for vertical and horizontal motion resistance, and complete with fairleaders for mooring wires and retractable collector guides.

n) Export hose reels capable of storing 1200 feet of 16-inch diameter hose, hydraulically operated. One required.

o) Gas detection system, combination H_2S/combustible gas type, explosion proof, with remote monitoring alarm console. Assume twelve sensors to cover the ship.

p) Surface flare suppression system, remotely controlled fire monitor with spray attachment, 2500 GPM at 100 PSI. Four required.

q) Dynamic positioning and automatic station-keeping system integrated into the mooring and thruster drive/control system.

r) Riser handling troughs (see Figure 3.2-1) complete with bottom rollers, gutter guides and clamp shoes.

s) Control systems for APRS, sonar, video, collector anchoring and positioning.

t) Water curtain and deluge system, as applicable, for exhaust stacks, generator modules, moon pool and other areas as needed.

3.2.5 Special Features

3.2.5.1 Lightering Facilities & Resupply

Lightering of the collected oil to a shuttle tanker will have to commence within a maximum of 10 days after collection begins and continue every 10 days thereafter. To keep the shuttle tanker as far as possible from the danger zone discharge of collected oil should take place over the stern. The discharge piping can be routed along the top of the main deck aft and connected to a floating hose hung over the stern. If the floating hose is assumed to be 16 inch diameter, the tanker's existing pumps could be expected to deliver about 2,500 tons per hour to the shuttle tanker. Therefore offloading can be accomplished in seventeen hours, or one day, if seven hours are allowed for connecting and disconnecting the hose.

In addition to discharging the collected oil, the vessel must receive food and fuel. The usual capacity for both items on tankers is sufficient for one round trip of the longest voyage anticipated which is about 60 days. Assuming a crew increase from 30 to 42 persons, the available food storage would last about 43 days which would mean re-supplying 4 times for a 150 day duration. If 5 lbs of provisions per man per day are assumed, 4.5 tons would be needed for each supply. These stores can be handled from supply boats by the existing ships equipment or can be delivered by helicopter.

If the fuel usage for the thrusters is assumed to be about 0.4 lbs/shaft horsepower/hour, a maximum of 75 tons per day will be burned. This fuel consumption is about the same as the tanker would require when steaming, therefore the ship must be supplied with 4500 tons of fuel every 60 days. The fuel can be delivered by a fuel barge which must be moored to the aft quarter of the vessel where the fuel connection is usually located. Water spray monitors should be provided to protect the barge, but due to the distance from the

blowout no further protection should be required. The fuel barge must be of the type which is capable of lifting the supply hose to the collector vessel's deck so that no additional equipment will need to be added.

3.2.5.2 Means of Deployment and Retrieval of Transfer Hoses

The usual floating hose used for loading or unloading tankers offshore is flexible rubber hose made up from 30 to 35 foot lengths. The minimum length of hose for safe operation at a single point mooring is about 800 feet, so that for offloading from the collector tanker between 1000 and 1200 feet should be sufficient. This type of hose however requires large amounts of deck space for both stowage and deployment, which is not available at the stern of the tanker. The so called "flexible pipe" such as manufactured by Coflexip, however, can be stored on and deployed from a hydraulically powered reel positioned on the after deck and below the helideck. Any existing mooring winches will have to be removed and a pipe roller fitted at the stern. The flexible pipe is not buoyant and floats will have to be placed on the pipe as it comes off the reel.

3.2.5.3 Counter-Fit Collector Provision

In order to avoid having to rig the collector and riser over the side of the vessel, the system needs to be deployed from a moonpool on the tanker centerline. The collector, which could be in the order of 30 feet diameter and 35 feet high, must be installed from the top, or main deck, due to limitations in water depth at dockside or because the conversion will be done in drydock. An alternative to this would be to install the collector from below with the assistance of divers when in deeper water, however, the first alternative is quite feasible and less expensive. The collector needs to be stowed with its bottom above the tanker keel and be pulled against stops to prevent motion during transit. These stops should preferably be retractable or removable so that inspection could be carried out on the main deck of the tanker at pierside assuming a suitable crane is available. It is not necessary to configure the bottom of the moonpool for the conical collector for counter-fitting.

Table 3.3

SECTION 3.3

SUBSURFACE COLLECTOR

FINAL REPORT

0341X

3.3 Subsurface Collector

3.3.1 The Basic Requirements

The collector is one of the most critical and important components of the total subsurface collection system. The literature review has indicated that the Sombrero utilized at the Ixtoc 1 blowout was the first such a device to be used for such an application. The subsequent studies and model tests have shown that a cone of a certain size can be utilized to capture the blowout plume near the wellhead and direct the flow through a riser up to the surface collection vessel. Although the concept of a cone to contain a plume is not new, its application as a subsurface collector of oil and gas emanating from a blowing well is somewhat unique. It is perhaps due to the limited knowledge of the behavior of the subsea blowout, coupled with the environmental constraints and operational hazards, that certain basic requirements of the collector need be established.

The requirements as specified by MMS are given in Section 3.1. These and other requirements can be enumerated as follows:

1. The collector should be large enough to contain the meandering plume;
2. It should be deployable over and close to the blowing wellhead;
3. It should be capable of being held in position;
4. It should be deployable from a ship;
5. The collector is to be sized for only one wellhead/BOP.

3.3.2 Functional and Configurational Requirements

1. The collector must confine the plume and direct the flow up through the riser to the surface vessel without choking or spilling.
2. Although a sealing collector (permitting no entrainment of water) is considered ideal, it can not be pursued due to impracticality of installation. As such, the collector does not have to withstand the differential pressure loads even if it can be sealed onto the seabed.

3. The volume of entrained water is not directly a function of collector size and configuration as long as the entire gas flow is captured by it.
4. The collector size must be appropriate for the riser size needed for total flow without excessive pressure drop.
5. The transition at the collector-riser joint should provide for smooth flow.
6. A double collector/double riser configuration has been found to be most efficient.
7. The diameter and the height of the collector should be such that it can be accommodated by a moon pool and a gantry or a derrick of practical dimensions.
8. The bottom radius should preferably be at least 1 1/2 times the anticipated offset error during installation.
9. It should be tall enough to accommodate up to 30 ft. tall wellhead/BOP assemblies if, in some situations, the collector could be placed on the seabed and completely cover the BOP.
10. The model experiments conducted by Brown and Root, Inc. (in 1979) and Dr. J. H. Milgram [13] have shown that the shape of the collector is immaterial. Dr. Milgram's laboratory tests [12] also indicated that while the proportions of the collector did not have significant effects on collection efficiency, the overall size did and must be considered.
11. The location of the turbulent interface inside the collector (as depicted in Fig. 2.3-38) has not been well-defined, but its area has been found (from model test pressure data) to be a percentage of the base area of the collector corresponding to its height and the gas flow rate [30], and is theorized to vary between 45 and 100 percent. It has been suggested [8] that the higher the interface the better the collector performance. The formation of the turbulent interface could possibly be avoided by properly sizing the riser(s) to carry all the liquid phase flow rate. The total lack of advance knowledge about the reservoir, blowout characteristics, and the precision of installation makes this approach difficult.

In order for the turbulent interface to be as high inside the cone as possible, its area must be as small a percentage of the collector base area as possible. This involves a few contradictory situations. Since the base diameter should be large enough to accommodate the wellhead while allowing for installation error, the collector must be tall enough to satisfy the interface location criterion. From Dr. Topham's analysis [30], it appears that even for a tall collector (height | diameter) the interface area would be close to 70 percent for the specified gas flow rate of 312.5 SCF/sec (8.85 m^3/sec). But, it is to be realized that Topham's analyses were based on single collector/riser system. The problem of the turbulent interface can be partially solved by the double collector/riser, although specific analytical or experimental data on interface location in double collector are not available. It is believed that preventing the gas spillage would be the first priority in developing the collector configuration.

12. During deployment the collector will be subjected to destabilizing plume forces. It will also experience upward thrust from the plume after it has been positioned over it. The collector must be able to withstand these forces and remain stable. The experimental observations of P. S. Teigen, [37], showed the variation of vertical plume forces as a function of vertical distance from the blowout source. They appear to be small near the wellhead (see Fig. 3.3-2).

3.3.3 Collector Configuration Development

The functional and configurational requirements listed in the preceding section are the basis for the development of the physical configuration of the collector. Other desirable options or features are also to be taken into consideration. These include:

1. Single vs double riser/collector

   Based on Dr. Milgram's model tests and his input to this study, coupled with the requirement of MMS for 95 percent collection efficiency, it has been concluded that the double

riser/collector configuration is the preferred choice. Additional explanation is given in Section 3.4.

It should be pointed out, though, that under certain conditions, such as shallow water depth and low GOR etc, a single collector and riser system may be equally effective. But, because of its potentially limited scope of application it is not preferred as a general purpose collector system.

2. Integral vs Remotely Controlled Buoyancy

The anticipated forces on the collector and the considerations for its deployment/installation, etc., dictate that the collector be negatively buoyant. In that case remote-controlled buoyancy is not required, but in certain situations could be a desirable feature.

3. Counter-fit Collector

A counter-fit collector in the ship-hull would be all right for normal stowage, but it would be inconvenient for repair, inspection and maintenance. Moreover, it would be unnecessarily subjected to corrosion, fouling and marine growth. Therefore, the benefits of the counter-fit concept, especially the convenience of handling, can be realized by fitting and supporting the collector inside the moon pool as shown in Fig. 3.2-2.

4. Basic Configuration

The configuration shown in Fig. 3.3-1 is the result of the synthesis of all the functional and operational requirements. Many parameters are qualitative only because the scarcity of reliable scientific data makes them unquantifiable. The optimization of the configuration or the design is also not possible for the same reason.

The configurational design as shown in Fig. 3.3-1 includes the following major features;

- o double cone and double riser,
- o interim relief venting through diverter valves which are remotely actuated,

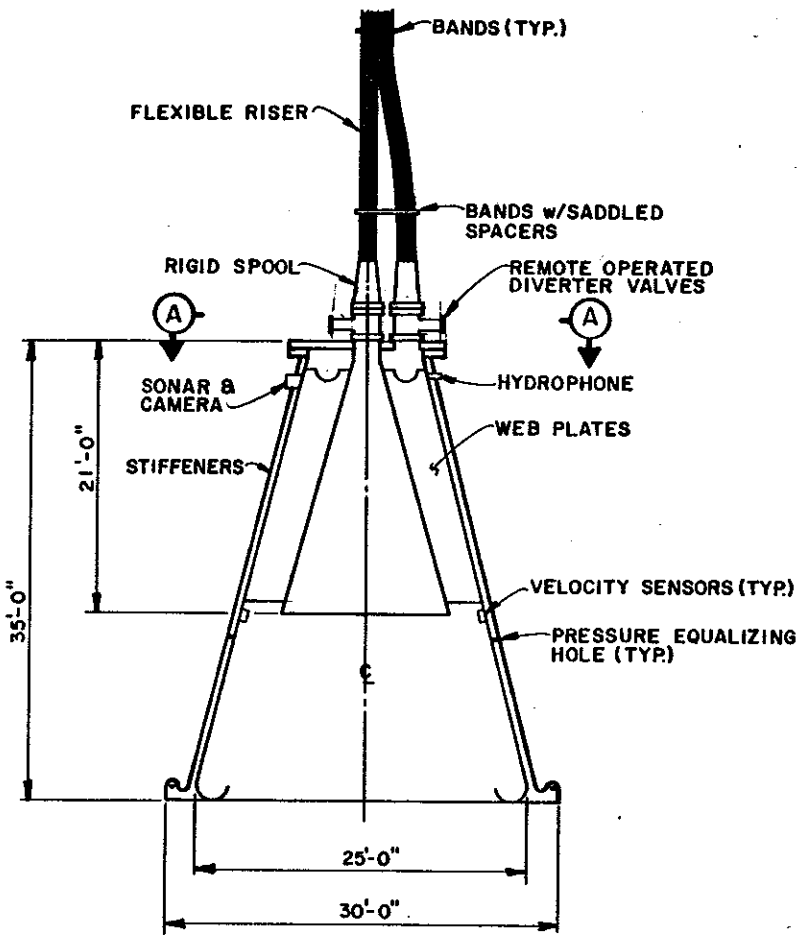

ELEVATION

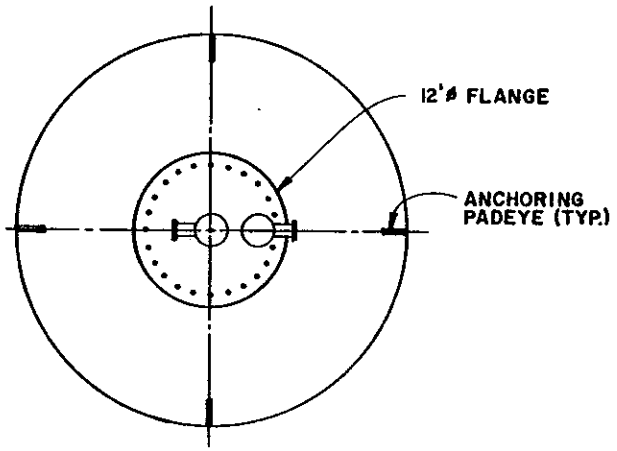

VIEW 'A-A'

REVISIONS	BY	DATE

NOTES

U.S. DEPARTMENT OF THE INTERIOR
MINERALS MANAGEMENT SERVICE

Brown & Root Development, Inc.
HOUSTON, TEXAS

SCALE: 1" = 10'	
DRAWN BY: R.VYBIRAL	DATE 8-6-85
CHECKED BY: ANLS	DATE 8-20-85
APPROVED: EEB	DATE 8-20-85
CUSTOMER APPROVAL	

TITLE OF DRAWING: SUBSURFACE COLLECTOR

CONTRACT NUMBER XC-0030

DRAWING NUMBER FIGURE 3.3-1

CR 2001

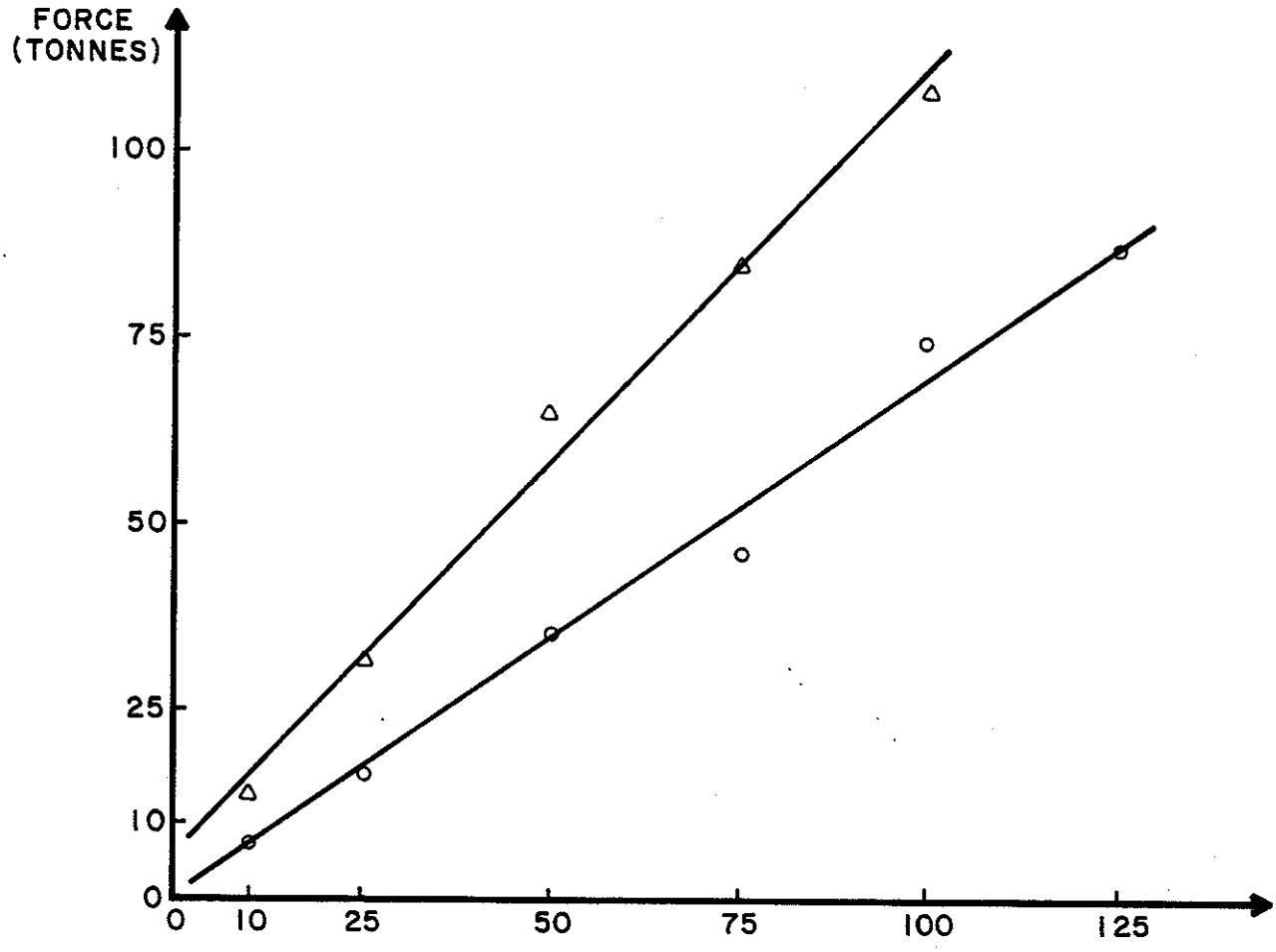

○ – AIR INJECTION 18.5 Nm^3/S (56.5×10^6 SCF/DAY)
△ – AIR INJECTION 37 Nm^3/S (113×10^6 SCF/DAY)

BASED ON A COLLECTOR 17.5 m IN BASE DIAMETER 19 m TALL AND WEIGHING 283.7 TONNES SUBMERGED.

U.S. DEPARTMENT OF THE INTERIOR
MINERALS MANAGEMENT SERVICE

Brown & Root Development, Inc.
HOUSTON, TEXAS

SCALE: NONE	TITLE OF DRAWING: MEAN VERTICAL FORCE FROM PLUME ON COLLECTOR
DRAWN BY: A.FOX DATE 8-7-85	
CHECKED BY: ANLS DATE 8-20-85	
APPROVED: EEY DATE 8-20-85	
CUSTOMER APPROVAL	CONTRACT NUMBER XC-0030 / DRAWING NUMBER FIGURE 3.3-2

- o enlarged base to prevent sinking into the seabed if it ever rests on it,
- o deflector (or curved lip) at the lower end to arrest and redirect the escaping flow along the wall (as shown in Fig. 2.3-38),
- o pressure equalizing holes to prevent implosive damage to the collector should it become sealed by chance and the diverter valves fail to open,
- o double cones sized for best possible performance based on the experimental observations,
- o diameters and heights large enough to prevent gas spillage as well as to completely enclose up to 30 ft tall BOP.

5. Weight

The collector should be at least 25 to 30 tons, submerged. The actual weight can be determined only after a detailed design is done; and modifications can be made in the design to increase or reduce the weight to a desired level with due consideration for loads and stresses. The suggested weight is for stability and resistance to plume forces without creating unnecessary handling problems. The forces from current drag have been estimated to be less than 10 tons, and the upward thrust from the plume is anticipated to be in the same range (ie. 10 tons) or less, if the collector is positioned within 25 ft above the source (see Fig. 3.3-2).

6. Materials

The collector can be fabricated from regular structural steel using standard fabrication practices. The nature and duration of its use for blowout collection is such that special treatment against corrosive action from any H_2S and CO_2 in the gas is not warranted. Albeit, it should be protected from long term corrosive effects of the marine environment with appropriate paints/coatings and regular maintenance.

Materials required for this application are envisioned to be available off-the-shelf at the present time.

Tab

3.4

SECTION 3.4

COLLECTOR RISER

FINAL REPORT

0341X

3.4 Collector Riser

3.4.1 Review of Requirements

1. The gas, oil and entrained water in the order of 1 to 2 million barrels per day are to be transported through the riser from the subsea wellhead to the separation facilities mounted on the deck of the collection ship.
2. The flow rate through the riser must be such that the total pressure drop at a given point in the riser column is equal to the hydrostatic head at the same point.
3. The riser system flow analysis should account for changing water depths, correlations for multiphase flow, solution oil-gas ratios, and the dead oil and gas-oil viscosities.
4. The erosional and dynamic efforts of flow velocities are to be considered.
5. The presence of H_2S, CO_2, produced water and other corrosive agents, as well as wax should be taken into consideration in selecting the materials for the riser.
6. The collector and riser will be deployed from the moon pool of a turret-moored, thruster controlled vessel. Therefore, the riser should allow for its horizontal and vertical motions. The lower end of the riser will be attached to the collector which will be anchored to the seabed, therefore, slip joints and flexible are to be provided.
7. The riser system must be designed for easy and rapid deployment, installation, and retrieval.
8. Loads, stresses, vibration and rotational behaviors of the riser are of concern.
9. Hardware availability is an important consideration.

3.4.2 Define Configuration

3.4.2.1 Mixed Flow Analysis

Final detailed design of the riser will require careful attention to the transition from the collector to the riser to avoid excessive turbulence which will significantly effect the recovery efficiency of the system.

Table 3.4-1 in this section shows the entrained water rates for the various combinations of gas rate and water depth for each of the two risers. Also given are the equations (Fig. 3.4-2) based on Beggs & Brill's two-phase vertical flow correlation. These equations were used to generate the water rates for the various operation points.

3.4.2.2 Design Review and Optimization

Single Riser System vs Double Riser System

The single riser system has the advantage in that the connect/disconnect is easy, the loading on the collector is symmetric which possibly allows for a safer system and that weathervaning of the ship can be easily accommodated by a less complex product swivel. The disadvantages of a single riser system is that the double collector is not practically accommodated and the collection efficiency declines rapidly shallow water depths and/or high gas volumes.

Previous experiments by Milgram [8] have indicated that the single cone collector must be positioned as close as possible to the wellhead for the best collection efficiency. In practice however, sometimes this may not be possible such as when there is interference due to debris. In addition, during a blowout, the volume of gas escaping from the well may be misjudged by a substantial amount. In either of the above cases, a double cone collector would help the collection efficiency by being more "forgiving" to non-optimum conditions. A single cone collector would have about the same

WATER DEPTH (FT.)	20-INCH RISER GAS RATES, MMSCFD			
	10	20	30	40
200	1.45	1.36	1.28	1.20
400	1.96	1.84	1.73	1.62
600	2.19	2.08	1.97	1.86
800	2.33	2.22	2.12	2.02
1000	2.41	2.32	2.22	2.13

WATER DEPTH (FT.)	24-INCH RISER GAS RATES, MMSCFD			
	10	20	30	40
200	2.21	2.13	2.05	1.97
400	3.07	2.95	2.83	2.71
600	3.46	3.34	3.23	3.11
800	3.69	3.58	3.47	3.37
1000	3.84	3.74	3.64	3.54

TABLE 3.4-1

RISER LIFT RATES, MMBPD

BEGGS & BRILL DISTRIBUTED FLOW

f_{tp} = FRICTION FACTOR (2-PHASE)

f_{NS} = FRICTION FACTOR (NON-SLIP)

V_M = MIXED VELOCITY

Fr_M = FROUDE NUMBER

C_L = LIQUID VOLUME

$$Fr_M = \frac{V_M^2}{gD}$$

HOLD UP

$$E_L(0) = \frac{1.065\, C_L^{0.5824}}{Fr_M^{0.0609}} \qquad y = \frac{C_L}{E_L(0)^2}$$

$$S = \frac{\ln y}{-0.0523 + 3.182 \ln y - 0.8725 (\ln y)^2 - 0.01853 (\ln y)^4}$$

$$\frac{f_{tp}}{f_{NS}} = e^S \qquad f_{NS} = \left[4 \log_{10} \left(\frac{Re_{NS}}{4.5223 \log_{10} Re_{NS} - 3.8215} \right) \right]^{-2}$$

$$Re_{NS} = \frac{D V_M \rho_{NS}}{\mu_{NS}} \qquad f_{tp} = e^S f_{NS} \qquad \left(\frac{\Delta P}{L} \right)_f = \frac{2 f_{tp} V_M^2 \rho_{NS}}{g_c D}$$

ENTRANCE LOSSES

$$\Delta P_i = K \frac{V_M^2}{2 g_c} \qquad K = 0.5$$

EXIT LOSSES

$$\Delta P_o = K \frac{V_M^2}{2 g_c} \qquad K = 1.0$$

$$\Delta P_{TOT} = \Delta P_f + \Delta P_i + \Delta P_o + \Delta P_{LIFT}$$

FIGURE 3.4-2

EQUATIONS FOR COMPUTING LIQUID FLOW IN RISER

collection efficiency as a double cone collector if the collector is positioned at the correct height above the seabed. If the collector is not at the right height or if the gas volume is not as expected, a double cone collector is more efficient. Double cone collection efficiency can be 2-3 times greater than a single cone under these "non-optimum" conditions. Therefore, a double cone collector is recommended. Note however, that the above discussion is only concerned with the collection efficiency and that the separation efficiency which contributes to the overall system efficiency is discussed in the following Section 3.5.

If a double cone collector is used and the flow is routed to a single riser, large amounts of water may be drawn into the system and result in choking the flow. Therefore a double cone collector with a single riser is not recommended.

The advantages of a double riser system are that the double collector can be easily accommodated with its associated possible increase in collection efficiency under certain conditions. The disadvantages of a double riser are that the tension will be approximately double that of a single riser, drag will be higher, a moment may be applied to the collector due to non-symmetrical forces, deployment/retrieval will be more complicated, the top connection/product swivel mechanism will be more complicated and the risers will need to be bonded together with a spacer thus further complicating the deployment/ retrieval process.

Rigid Steel Pipe vs. Flexible Pipe Riser

The advantages of steel pipe are that common drilling risers are of this type, flow characteristics are somewhat better than flexible pipe, the steel pipe is available in all sizes, and steel pipe material costs are less costly expensive than flexible pipe.

The disadvantages of a steel riser are that constant tension is required to prevent pipe buckling which would fail the riser, fabrication of the riser string in deep water will be time consuming, and operational failure of the collector mooring system may lead to riser failure through loss of tension control and bending. In addition, high stresses due to lateral storm currents and vibration due to inherent stiffness can be expected. Futhermore, steel is vulnerable to high rates of galvanic corrosion in the marine environment in addtion to chemical corrosion if H_2S and/or CO_2 are present in the blowout gas.

The advantages of flexible pipe are that tight control on tension in the riser is not required, loading of the riser as a column does not damage flexible pipe, its deployment/retrieval in deep water is less time consuming, it is good in fatigue applications, it is not subject to internal or external corrosion and it provides good thermal insulation.

The use of the flexible riser also allows positioning of the collector over the wellhead somewhast offset from the position of the ship. The degree of flexibility available here will increase with the water depth.

The disadvantages of flexible pipe are that the flow characteristics are not as good as that of steel pipe and its flexible nature can impose additional loads on the collector which must be resisted. Although a 20" flexible pipe has never before been used as a riser thus making it somewhat of a new hardware application, the flexible pipe technology itself is well established.

The flexible pipe is characterized by a composite type construction as described below and shown in Figure 3.4-3. Flexible pipes, in

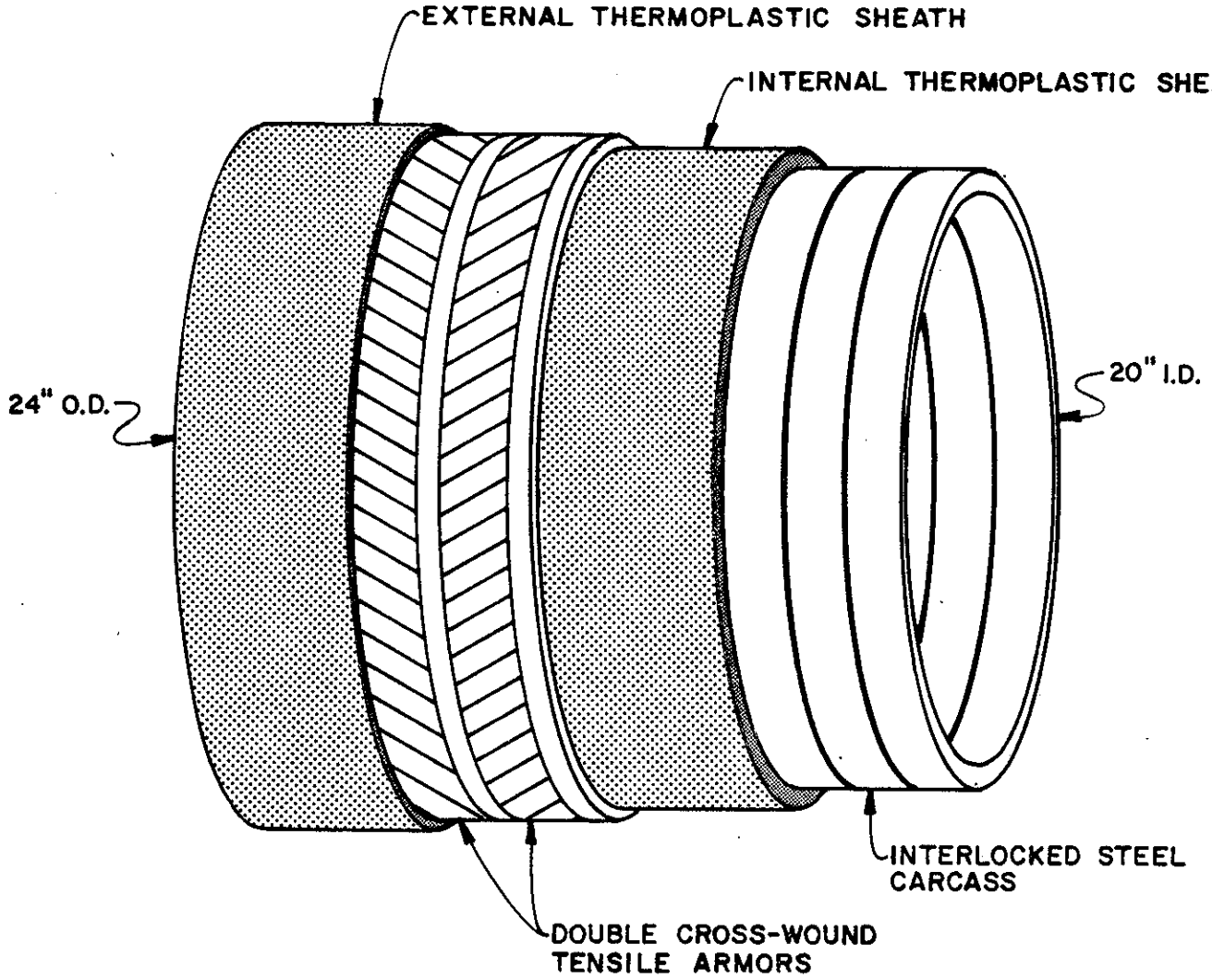

U.S. DEPARTMENT OF THE INTERIOR
MINERALS MANAGEMENT SERVICE

Brown & Root Development, Inc.
HOUSTON, TEXAS

SCALE: NONE	TITLE OF DRAWING: FLEXIBLE PIPE RISER
DRAWN BY: R.VYBIRAL DATE 7-29-85	
CHECKED BY: K.B.K DATE 8-16-85	
APPROVED: EET DATE 8-20-85	
CUSTOMER APPROVAL	CONTRACT NUMBER XC-0030 / DRAWING NUMBER FIGURE 3.4-3

general, are easy to handle, transport, install and retrieve. A typical flexible pipe comprises the following main structural components.

1) An interlocked stainless steel carcass to resist internal and external pressures and crushing and to provide the flexibility for a short bending radius. In addition, the stainless steel material selected for this layer must have excellent corrosion and erosion resistance.
2) An internal thermoplastic sheath to essentially make the riser leak proof while also being able to resist abrasion and corrosion including the effects of sour gas and crude oil.
3) A double cross-wound layer of tensile armor steel wires which serve to resist axial load and internal pressure and to provide torsional strength.
4) An external thermoplastic sheath to keep the armor wires together and to protect them against external corrosion, abrasion and damage.
5) Sometimes an intermediate thermoplastic sheath is provided to protect the internal sheath from collapsing in the event of damage to the external sheath in hazardous subsea conditions.

3.4.2.3 Flexible Riser Design Considerations

The following theoretical modes of failure need to be addressed when designing a flexible pipe:

- Excessive axial tension - The maximum tensile strength of each 20" ID riser is 340 kips. With a submerged weight of 99.5 plf (full of seawater), the weight of the riser in 1000 ft of water is 99.5 kips. If the total maximum weight of the collector were added to this , as might happen if the collector load were unbalanced, the submerged axial load would be about 160 kips. Added to this figure would be 13 kips which accounts for the weight in air of the riser when it is filled with seawater (44

ft @ 298 plf). The total axial load of 173 kips is well within the allowable tensile limits. Note that the weight in air (empty) of the pipe is 158.5 plf, and the submerged weights used above can occur only in the unlikely event of the riser being closed at the bottom end while it was filled with water.

- Excessive bending/kinking - The handling procedures of the pipe must be carefully planned to avoid this type of failure. The minimum radius of the 20" flexible pipe, when it is not in operation, is 13 ft. and the minimum operational radius is 20 ft. The bottom perimeter of the moonpool on the ship will be flared outward with at least 20 ft. convex radius to prevent the pipe from accidental kinking. All other handling equipment will also be designed with a sufficiently large radius to prevent excessive bending. In addition, excessive bending can occur near the end connections because the flexible pipe essentially behaves as a beam near to the connections and as a cable away from them. This will require the design for flexural strain relief, which will increase the pipe bending strength near the connection and will physically limit the minimum bending radius so as to avoid failure.

- Excessive twisting - This is an unlikely mode of failure for the subsea collector application. Since the riser will be anchored at the top and bottom at all times, the torsional loads will not significant. The product swivel at the top will prevent any twisting of the riser resulting from the ship's yaw.

- Crushing or buckling due to excessive axial compression - This mode of failure is unrealistic for the subsea collector application since it could only occur when a rigid pipe is in compression and held laterally and thus prevented from moving sideways.

- Bursting by excessive internal pressure - Hypothetically, the maximum internal pressure possible in the closed riser is 460 psi which corresponds to a water depth of 1000 ft. The bursting pressure for the 20" ID flexible pipe is 5625 psi, giving almost a 12:1 safety factor. This safety factor complies with paragraph 4.2.2 of Det norske Veritas, Technical Note for Fixed Offshore Installations: "Flexible Pipes and Hoses for Submarine Pipeline Systems", TNA 503.

- Collapse by excessive external pressure - The maximum water depth specified for the riser is 1000 ft. The collapse pressure of the 20" ID flexible pipe is rated at 2925 ft of water, giving an almost 3:1 safety factor. The riser can collapse under external pressure only if it is empty or has a lower internal pressure, both of which are unlikely conditions.

- Extreme Temperature - This is not expected to be a problem for this application.

- Chemical Reaction - The stainless steel carcass will be designed to resist corrosion due to sour gas service. The connection (flanges) can also be made of stainless steel to resist corrosion.

- Leakage - The flexible pipes used for oil and gas service are built to be non-permeable. The steel carcass and the internal thermoplastic sheath ensure this quality.

- Fatigue - Flexible pipelines have been designed and well documented to provide outstanding fatigue failure resistance. Thus, adequate performance for the subsea collector application can be obtained by careful design and testing. A possible cause of fatigue failure could be vibration. However, this is not

expected to be a problem in this application due to flexibility and natural damping. The vibration likely to be caused by the fluid dynamics can be controlled by adjusting the back pressure and is called tuning.

3.4.2.4 Flexible Riser Design Conclusions

Two sizes were considered during the investigation, first a 20-inch diameter and then a 24-inch diameter riser. The 20-inch riser size is the most practical as it is considered to be the maximum that currently can be manufactured by any of the flexible pipe vendors. It may be possible to manufacture 24-inch flexible pipe in the future but it will certainly be at a significantly greater cost than for the 20-inch. The diameter dimensions mentioned above are for the nominal inside diameter of the respective pipe sizes.

The expected flow volumes through each size riser was determined by varying the gas rates and the water depths. As expected the 24-inch riser will lift, for a given gas rate and water depth, significantly more entrained water than the 20-inch riser. The selection of the riser is based on the minimum entrainment of water in the plume between the wellhead and the collector. Preliminary calculations of the rates in the plume indicate that a 20-inch riser will adequately lift the required volume.

3.4.2.5 Hydrates

Theoretically, hydrates can form in deep, cold water after the escaping gas cools down. Although the formation temperature can be predicted at a given pressure, this phenomenon is highly sensitive to gas composition. Furthermore, even the right combination of gas composition, temperature and pressure is not necessarily enough for hydrate formation. Turbulence, velocity, the freezing point of water and possibly other undetermined factors all have an influence on the formation of hydrates. The various studies have indicated that the

water depth must be greater than 1500 ft. for hydrate formation to take place even in the cold Arctic regions [26, 28, 50]. Therefore, in the warm temperatures of southern California and with the design parameter of 1000 ft. water depth, hydrate formation is quite unlikely and particularily so with the open collector design.

3.4.2.6 Wax

Some crude oils contain large quantities of waxes. These waxes manifest themselves by elevating the pour points of the crude. Any encounter with high wax oils will make its handling difficult. Most crudes in U. S. coastal waters have presented no such problems.

The crystallization of wax in the riser could result in deposits along the walls. Most will enter the inital separater as solids or tarry, viscous material.

There will be no way to prevent the crystallization of the waxes in a collector and riser. Application of heat at the surface will allow the crude to flow freely.

This is one of the reasons for designing a system to reduce the quantity of liquid to be pumped to the surface but the quantity can not be reduced to a level where heating would become feasible (see Section 3.5.1.2).

For this study it has to be limited to an awareness of the possibility of wax formation. However, there really is no effective way to control it if such a crude is encountered in a blowout.

The thermal insulation properties of the riser might help to slightly reduce the formation of any wax buildup on the walls of the riser and help reduce the likelihood of formation of hydrates in the gas. In addition, flexible pipe can be manufactured with an electrical heat tracing cable built into the pipe during its manufacture. This would further reduce the chances of hydrate formation or wax deposit.

If emulsions are formed, they will not affect the flow rate through the riser.

3.4.2.7 Foaming

Foaming frequently occurs in production system causing interference with the desired flow of separated gas as well as false readings on liquid level measurement. Foaming is a physical phenomenon which occurs when gases, either due to heating or depressuring, attempt to escape from the liquid. Foams form when the surface tension of the liquid is sufficiently high to prevent the easy escape of the gas bubbles. Two methods are generally employed to reduce the effects of foaming and will be discussed in the following Section 3.5.

Foam will not be a problem in the riser of the collection system currently under consideration. No cases of foam interference in a pipeline or well bore have ever been reported. The turbulence generated by the high velocities of the gas/liquid mixture as it rises through the riser will generally curtail any tendency to foam.

3.4.3 System Hardware Descriptions

3.4.3.1 Riser Details

Spool Pieces vs. Hose Reels

The apparent advantages of a reel from the standpoint of easy deployment and retrieval, and continuous lengths of the flexible pipe without intermediate end fittings, do not hold for the present application. This is primarily due to the following reasons:

- Based on the required minimum bend radius of 20 ft. the hose reel would be too large to be installed on the turret. Therefore, the reel can be used for storage purposes only, and the pipe will have to be reeled off completely during operation. Any other swivelling device to facilitate the operation without reeling off the pipe would be impractical. This will require the pipe to be manually started on the reel for spooling.

- o Since there are two risers, each will require its own reel which will add to the complication of the system configuration and operation.
- o If the blowout occurs in water depth significantly less than the specified 1,000 ft., the pipe will have to be cut to the required length, terminated and provided with end-fittings. Leaving the pipe on the reel, if possible, would cause excessive pressure drop and unpredictable effects from flow dynamics. Once cut, any advantages of the reel would be lost.
- o Any end fittings at the upper end of the pipe will make the reeling difficult due to the end fitting size. They can also damage the pipe by kinking, should the latter have to be wrapped over or under the fitting on the reel.

The relative advantages of spool pieces can be summarized as follows:

- o The sectional spools can be quickly connected and disconnected. Some special chute or guide trough to lay, store and run the pipe can be much more economical and simpler than the reel.
- o If a spool is damaged, only the damaged piece would need to be repaired or replaced. In case of a continuous pipe (on a reel) it would have to be cut and reflanged. This will make it sectional for the subsequent uses unless the entire pipe was replaced.
- o The deployment and retrieval procedures will be basically the same in either case.

Therefore, spool pieces of different lengths laid out on the ship deck in racks or troughs are a feasible alternative to reels. The lengths could be (4) 300' sections, (2) 200' sections and (4) 100' sections. This would permit fabrication of a riser, for water depths from 100 to 1000 ft., in. 100 ft. increments for each riser. Even with the spool pieces, however, the flexible pipe may need to be cut so that the optimum riser length is obtained. However, the cutting and flanging could take place while the ship is enroute to the site.

When the call for mobilizing the ship is received, the water depth at the blowout will be known. At that time, qualifed personnel will be immediately mobilized to the ship to prepare of the spools for each riser so that the proper riser length is obtained. It is assumed that any debris near the wellhead is either removable or that will not affect the positioning height of the collector over the wellhead. Assuming that all materials and equipment are already on the tanker and only the personnel need to be mobilized it can take up to four days to cut the 20" flexible pipe and attach the connection flange. When the ship is on site and ready to deploy the risers, the right combination of spool pieces for the water depth involved will have been prepared for use.

The possibility exists that no cutting will be required if the optimum riser length, based on the water depth and collector height off bottom, is a combination of existing spool pieces.

Based on the above discussion, the recommended scheme is to use spool pieces of different lengths.

An alternative to cutting the pipe would be to keep on hand numerous spool pieces of various lengths which will permit making up the desired length.

3.4.3.2 Riser Tensioner/Compensator

The riser tensioner, which is used to compensate for tides and vessel heave is mounted at the top of the risers. A telescoping mechanism or slip joint was not used because it would have been too big (over 50 ft. high), thus making it impractical to handle.

Tension to the risers is supplied by direct-acting hydraulic cylinders, backed by large gas accumulators. Four tension line cables will be placed at the top of the riser so that each line will pull one-quarter of the load. Figure 3.4-4 shows a sketch of the top

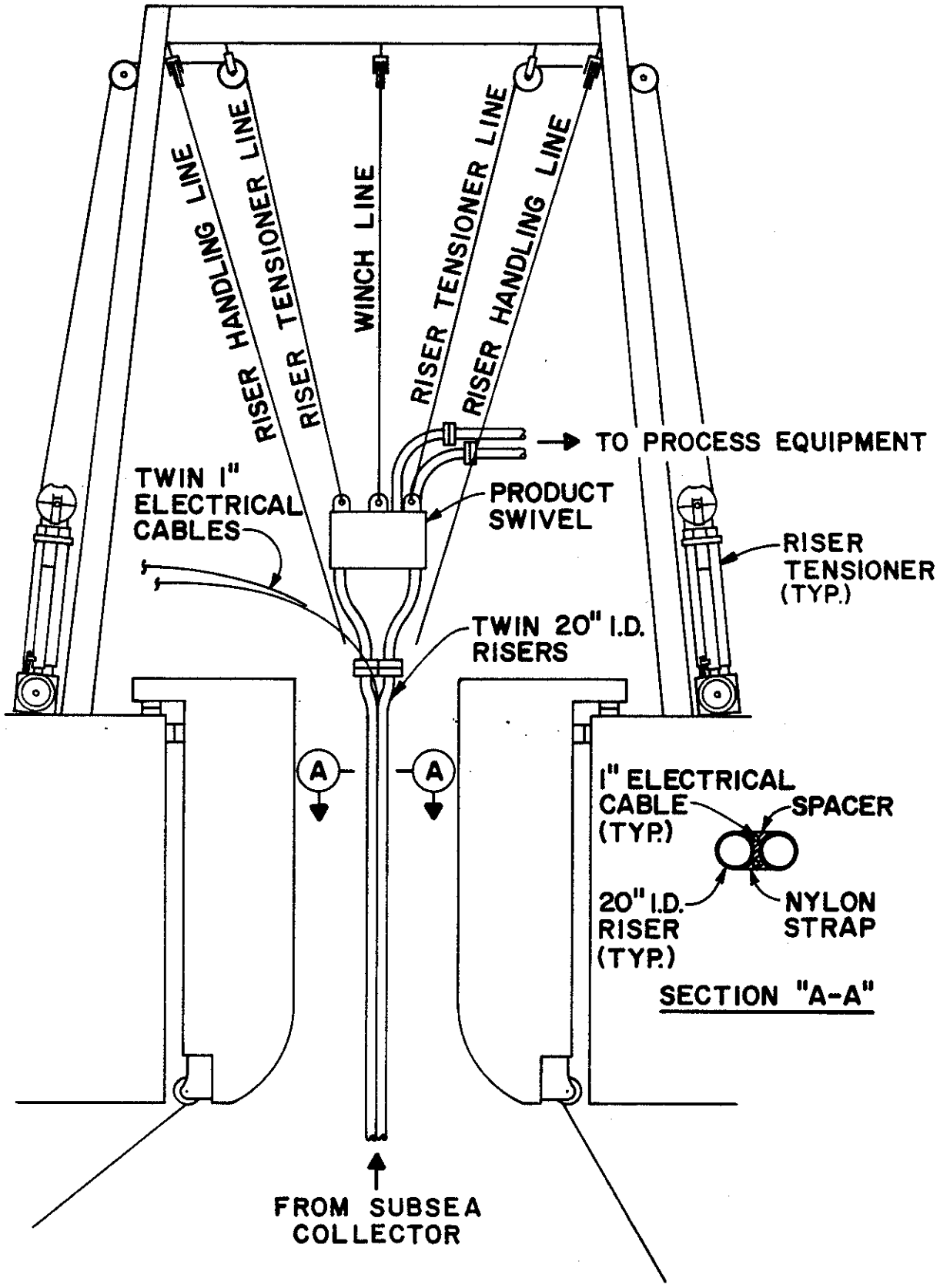

U.S. DEPARTMENT OF THE INTERIOR
MINERALS MANAGEMENT SERVICE

Brown & Root Development, Inc.
HOUSTON, TEXAS

SCALE: NONE	TITLE OF DRAWING: RISER-TO-PROCESS EQUIPMENT CONNECTION SCHEME
DRAWN BY: JKR DATE 7-29-85	
CHECKED BY: K.B.K. DATE 8-16-85	
APPROVED: EEP DATE 8-20-85	
CUSTOMER APPROVAL	CONTRACT NUMBER XC-0030 / DRAWING NUMBER FIGURE 3.4-4

of the riser and the riser tensioner lines. The riser tensioner is not required to maintain the structural integrity of a flexible riser as would be the case with rigid risers, but instead be used to maintain the collector at the optimum height above the blowout during the heaving of the ship. The stroke of the riser tensioner will be ± 8 ft., which is 8 ft. beyond the maximum operating single amplitude heave of the ship. The maximum expected load on the tensioner is 325 kips. Therefore, two 100 kip dual riser tensioners with a total of 400 kips capacity will be used.

Beneath the riser tensioner lines is the product swivel. This mechanism allows the ship to weathervane without twisting the risers. The approximate dimensions of the product swivel are 5 ft. in diameter and 3 ft. in height with a resulting weight of 18 kips. The swivel, which is shown in Figure 3.4-4, should be considered new technology.

3.4.3.3 Riser Deployment

When the ship has arrived at location and the ship's and the collector's anchors have been set, the risers are ready to be deployed. The sequence for riser deployment is as follows:

1) The bottom end of the first spool piece for each riser will be attached to the collector while it is still locked in position in the moonpool. In addition, the twin electrical cables are attached to the collector.
2) The top end of the spools will be attached to a hold-back tension line.
3) The collector will be unlocked from the moonpool and the hold-back tension line will slowly payout so that the collector is lowered. As the collector is lowered, the two risers and two electrical cables are intermittently banded together.
4) When the top end connection of the spools reach the moonpool, the spools will be clamped or tied-off in place and the hold-back tension line removed. The riser handling lines will now support the load.

5) The next spool piece will be moved into position and its bottom ends are attached to the top ends of the previously lowered spools which are still clamped or tied-off in place.

6) The hold-back tension line will now be attached to the top end of the new spool piece which has just been moved into position.

7) The old spool pieces are unclamped or untied and the tension line is slowly paid out as per step 3.

8) Repeat steps 3-7 until the collector is lowered to the desired or permissible height off bottom.

9) When the last spool pieces have been lowered and clamped into position in the moon pool, the product swivel will be connected to the top of the risers.

10) The clamps will be removed and the riser tensioner will be activated allowing the collector to be moved into position near the blowout.

The exact opposite procedure as described above would be used to retrieve the riser.

Tab

3.5

SECTION 3.5

SHIP-MOUNTED PROCESS SYSTEM

FINAL REPORT

0341X

3.5 Ship-Mounted Process System

3.5.1 Oil/Water/Gas Study

3.5.1.1 Flow Scheme

The quantity of entrained water is so large that the phase behavior of the stream in the riser is treated as a two-phase flow condition. No appreciable error is anticipated due to this assumption; however, the oil phase can not be ignored during the separation step of the process. Indeed, the recovery of the oil from this stream is critical to the effectiveness of the system. On the basis of these assumptions the process flow schematic shown in Figure 3.5-1 has been developed. Documentation of the liquid volumes to be anticipated has been presented previously in Table 3.4-1.

The gas, oil and water flow through the riser and discharge into a degassing tank located on the deck of the ship. This stream enters the vessel at a very high velocity. In addition, some of the gas is dispersed in very small bubbles throughout the liquid entering the degassing tank. Both of these phenomena result in a high degree of agitation. Some oil will be separated from the water in this vessel. The vessel is sized so that the residence time of the liquid in the vessel is sufficiently long enough to effervesce to a still liquid allowing an oil rich mixture to separate. Ample vapor space is provided to allow disengaging of liquid droplets from the gas prior to exiting the vessel. The degassing tank is designed for operation at elevated pressures if desired, to reduce the quantity of entrained water lifted by the gas flowing from the wellhead. Operation of the degassing tank at these elevated pressures may have an adverse effect on the oil recovery efficiency. The optimum pressure for maximum recovery must be determined experimentally for each individual blowout. The gas from the degassing tank flows through a flare knock-out drum and onto the flare stack for incineration.

From the degassing tank the oil rich mixture will flow under level control to the primary separator. This is where the bulk of the oil is separated from the entrained water. Some dissolved gas due to the reduction in pressure will also be evolved and flow to the flare for burning. Most of the water will be diverted to the water treating tank.

3.5.1.2 Primary Separation

The separation of crude oil from the entrained water is to be accomplished by gravity settling. Virtually all separation of oil from water employs gravity as the primary driving force. This method works very well where the crude oil is very light and results in a relatively high differential specific gravity when compared against that for seawater. Heavy crudes, tight emulsions, loose emulsions and other related physical properties sometimes make additional treatment necessary to improve and speed up the gravity separation. Some of the methods employed to achieve this goal are listed below:

A. Heating
B. Chemical Addition
C. Electrostatic Force
D. Combination Treating

The mechanisms for improving the separation by one or more of the methods listed above are described in the following paragraphs.

Heating

The application of heat to an oil/water mixture to decrease separation time has been utilized extensively in the "Oil Patch". The units normally used for this are called heater/treaters. The application of heat to the well stream in one of these units improves the separation in three ways:

A. Increased temperature may actually break up a loosely held emulsion.

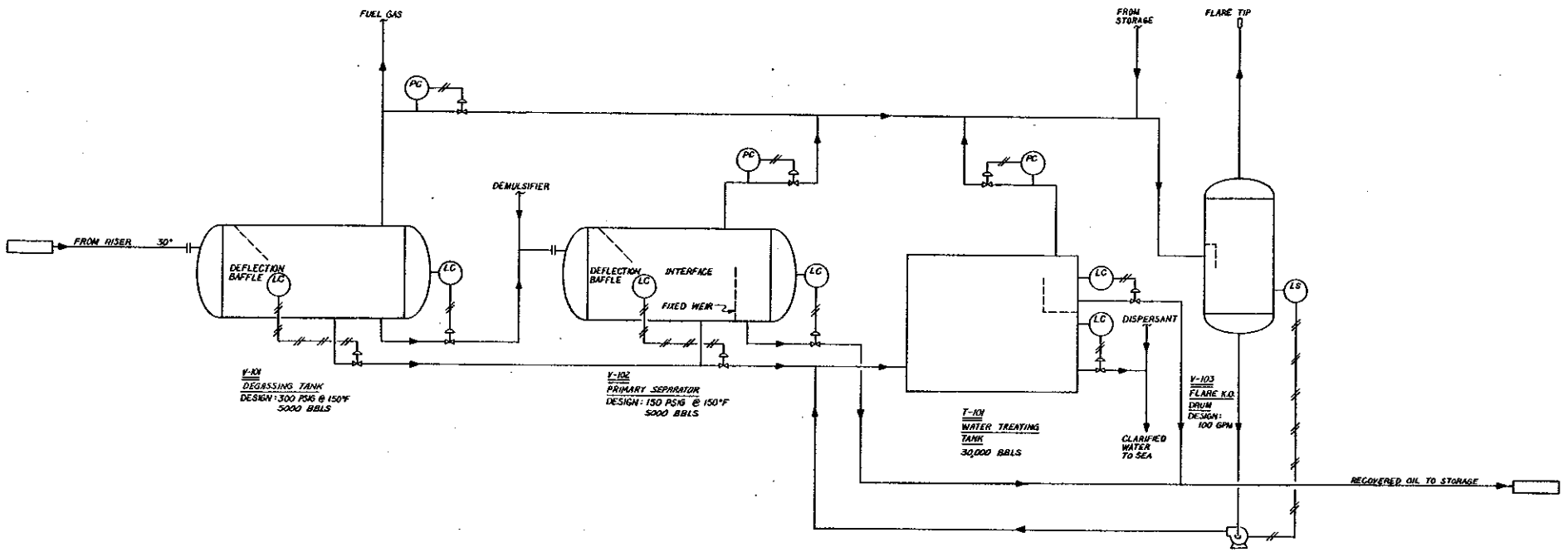

NOTES

REVISIONS	BY	DATE	REVISIONS	BY	DATE

Brown & Root Development, Inc.
HOUSTON, TEXAS

DRAWN BY: J.K. MISHER
DATE: 7-17-85
CHKD BY:
DATE:
SCALE: NONE

APPROVED
APPROVED

SEAL

TITLE OF DRAWING: PROCESS SCHEMATIC

NAME OF CLIENT: U.S. DEPARTMENT OF THE INTERIOR
MINERALS MANAGEMENT SERVICE

CONTRACT NO. XC-0030
DRAWING NO. FIGURE 3.5-1
SHEET OF

B. For most oil/water systems the addition of heat will change the apparent specific gravity of the oil and water. These changes occur in a way that decreases the settling time for the separation.

C. Similarily the added heat lowers the viscosity of the fluids and further enhances the ability of the two fluids to separate.

Chemical Addition

Some crude oils form emulsions which cannot be separated by heat or time. Many emulsions can be broken, allowing good separation, by using chemicals to alter the physical properties of the oil or water. Basically there are two types of emulsions, water-in-oil and oil-in-water. There is no method to predict the form or consistency of emulsions prior to beginning operation. As soon as it is determined that the fluids are emulsified, a testing program should be initiated to determine the appropriate chemicals for treatment.

There are numerous chemicals available for demulsifying oil/water mixtures. In fact, there are so many of them that it will not be feasible to stock a supply of each onboard the tanker. Only reagent quantities can be kept in a laboratory especially designed for making the tests for demulsifiers. When the testing has been completed the chemicals may be ordered. Suppliers of the most commonly used chemicals should be contacted during mobilization to ensure rapid delivery of required materials. The demulsifier tests could be conducted using some samples picked from the surface spill before the collection operation begins.

Electrostatic Force

Another frequently utilized method for separating oil and water is the use of electrostatic force to enhance the settling process. This is accomplished by putting electrical grids inside a settling tank. When an electrical current is applied to the grids the water molecules begin to oscillate. This oscillation causes coalescence of the water droplets through multiple collisions, thus increasing the rate of settling.

Therefore, the recommended method for accomplishing the desired separation is to use cold gravity settling with chemical demulsification if required.

The primary oil/water separation will be accomplished in the primary separator. This water vessel is sized for 15-30 minutes residence time. This will be ample for the gravity settling.

3.5.1.3 Water Treatment

Water from the separation tank will go to some of the tanks of the ship for final treatment. Any oil remaining in the water will be either dissolved or suspended in small droplets. For offshore applications this stream is generally treated in two stages. The first stage is a corrugated plate separator designed to coalesce the oil droplets and allow them to rise through a short path for collection and recovery. The second stage is what is commonly called a flotation cell. In this method natural gas or air is mechanically diffused into the flotation cell. The droplets of oil adhere to the gas bubbles and rapidly rise to the top, and the froth thus formed is continuously skimmed from the surface of the water in the cell.

Both of these steps require relatively low velocities (long residence times) for effective recovery of suspended oil. The equipment required to utilize these techniques would be both massive and costly.

As stated above it is considered uneconomical to heat up the inlet stream in order to achieve better separation. Therefore, it is anticipated that the oil content of the treated water discharge will be in the range of 300-500 ppm. The concept, as presented, provides for a large storage volume so that additional gravity settling can occur in order to achieve the estimated range of oil content stated.

There have been few new developments in water treating technology in the past few years. Therefore, prior to undertaking the detailed design, extensive research will be required to determine the best available technology for achieving the desired separation and discharge water quality.

3.5.1.4 Oil Disposal

The oil separated from the water in the separation tank is skimmed and transferred to the storage tank. The basis of the storage tank size is 100% recovery of the maximum oil rate of 30,000 BPD for 14 days or 420,000 BBLS. The stored crude oil may be either transferred to shore by a shuttle tanker or burned.

Burning on board ship can be accomplished but it is not recommended. The recovered crude oil will likely contain a significant amount of emulsified water. California crude oils are typically heavy and form very viscous emulsions. To be able to burn this material it must be atomized. In addition, provisions must be made for supplemental firing. This is done in order to evaporate the contained water and ensure a high flame temperature for complete combustion. A smokeless flame will be highly desirable when operating at an offshore location in California waters. Burning the crude in this fashion will require a large volume of compressed air and liquid propane fuel. The use of the recovered gas may be feasible but compression facilities would be required. The storage requirements and logistics of supplying the propane on a regular basis makes this an undesirable alternative.

There are also other problems associated with burning the crude oil on board ship. Personnel must be protected from the intense heat generated by the burners. Most offshore wells in California crudes are sour, containing up to 2% sulfur compounds. Burning of the crude and gas will result in significant amounts of sulfur dioxide (SO_2), a toxic gas.

The transfer of the recovered crude oil to shore by shuttle tanker is the recommended mode of operation. The crude oil can be treated and possibly refined in a much more environmentally acceptable manner onshore than onboard the ship. Preplanning and alertness during mobilization should minimize problems with disposal of the recovered crude on shore.

3.5.1.5 Gas Disposal

The gas from the gas separator may be disposed of in one of the following ways:

1) Flaring
2) Fuel

After separation of the gas from the liquid reaching the surface most of the gas will be burned in a flare. This is done primarily to prevent an accumulation of hydrocarbons on the deck of the ship. It also is more environmentally acceptable since it will greatly reduce the quantity of hydrocarbon vapor released to the atmosphere. Aside from the obvious fire hazard it is likely that this gas will contain H_2S in a concentration sufficient to be toxic. Although SO_2, the product of burning H_2S, is also toxic, it is not as hazardous as the H_2S. The high temperatures reached as a result of the burning process will aid in the dispersion of this material.

Other factors that must be considered during the detailed design of the flare system are location and optimum height of the flare stack on the platform. Heat radiation and dispersion of toxic products of combustion are primary factors in designing the flaring system.

Some of the gas may be used for fuel. It is anticipated that the gas separation tank will operate at or near atmospheric pressure to maintain maximum recovery efficiency. Therefore, if the gas is to be used as fuel it must be compressed and treated to the required quality. To utilize the gas for fuel will require a number of

equipment modifications. It is anticipated that the majority of the engines on board the ship will be fueled with diesel. To utilize the gas the engines would require modification to accept either diesel fuel or natural gas.

As discussed earlier most produced gas from West Coast production wells is expected to contain H_2S, a highly corrosive gas to the engines. If sour gas is burned it is reasonable to expect high engine maintenance.

The fuel gas, following compression, could be sweetened using an amine absorption process. However, this procedure would require a large number of additional equipment. The process is complex and would require trained operators to keep the system operating smoothly. Obtaining fresh chemicals for charging the system at the time of mobilization would be difficult. Thus, the sweetening system would not be very practical for a rapid response.

For these reasons, (i.e. compression facilities, engine modifications, and sour gas), the use of recovered gas for fuel is not considered practical and is not recommended. The increased complexity will require trained operators, additional maintenance and increased costs. The additional equipment will also increase the weight on the deck and could significantly affect the stability of the ship. Other factors to consider are available space on the deck and safety for operating personnel.

3.5.2 Interim Production

The construction of a vessel for rapid deployment to a subsea blowout for recovery of escaping oil will not be an economical venture unless an alternate use is found for the vessel when not required to service a blowout. One alternative is to utilize the vessel for early production of a field. The separation facilities planned for the collection of recovered fluids can be utilized for separation and water treatment. Some relatively minor modifications would be

required to maintain smooth operations. These modifications would primarily be control valves which must be designed to handle much larger quantities in a blowout situation than would be anticipated in an early production facility. Spool pieces could be designed for quick change out of the control valves while enroute to a blow out site. If measurement is required during the production mode of operation interchangeable piping sections could also be utilized for accommodating this requirement. Parallel piping designed for alternate modes of operation is another potential means for obtaining the desired flexibility. The same technical approach can be used to utilize the system for extended well tests also.

3.5.3 Corrosion and Erosion

The operating conditions of the recovery system are considered severe for both corrosion and erosion. These phenomena will manifest themselves primarily in different components of the system.

Corrosion is primarily the electrolytic action of water solutions on steel. There are several conditions anticipated which will promote corrosion within the system. As discussed earlier large quantities of sea water will be lifted to the surface. This water will contain dissolved oxygen which is highly corrosive to carbon steel piping and vessels. Most produced gas from offshore California contain significant quantities of CO_2 and H_2S which when combined with water form highly corrosive weak acids. Several features can be designed into the system to allay the effects of these types of corrosion, since it will not be practical to totally prevent it. First, a generous corrosion allowance may be added to both the vessels and piping. An internal coating may also be added to the vessels and piping downstream of the separators. It is unlikely that an internal coating will stay in place in the riser and inlet piping due to the extremely high velocities anticipated. Aside from the in-service corrosion problem, the vessels and piping will be subjected to atmospheric corrosion and rust during long periods of inactivity. The coating will also serve as a rust preventative and keep scaling problems to a minimum during operation.

Chemical methods such as inhibitors are not considered viable for this application primarily due to the very large volumes of liquid being handled.

Some operators, where corrosive conditions are known to exist, will insist on additional protection by providing cathodic protection within the separators. These anodes are small enough so that the separation that is to be accomplished in the vessels encounters no interference.

The high velocities anticipated in the riser and separator inlet piping have been previously discussed. These velocities will approach or exceed the erosional velocities for the fluids. In this case there is very little that can be done to mitigate the problem. The riser and piping must contain sufficient metal to endure the rough treatment during a single blowout. After the job is complete the risers and piping will require a thorough inspection and, if indicated, replacement.

3.5.4 Foaming

Two methods are generally employed to reduce the effects of foaming. The first is with chemicals which act to suppress foam formation by altering the surface tension of the fluid. This method can be costly. Too, the chemical to be used to suppress foam formation must be determined experimentally since all fluids do not react in the same way to the same chemical. Foaming has been discussed previously in Section 3.4.2.6. Here are some additional comments which relate to its consideration in the design of the process vessels downstream of the collection risers.

Where foaming is anticipated (it should have been determined by well testing except if blowout occurs during exploration drilling) anti-foam baffles are installed in the vapor spaces of the separators. These devices, either perforated plates or mesh pads, do not prevent the formation of foam but are designed to quickly burst the gas bubbles and allow complete separation of the liquid and gas.

Foam or spume may form in the gas separator. However, since the bulk of the fluid will be sea water the foaming is not expected to be excessive. Any carry over of water will be removed in the flare knockout drum.

Hence, no special requirements for the control of foam are anticipated.

3.5.5 Contingency/Failure

The ship-mounted process facilities will be designed with equipment which gives the maximum reliability available consistent with current technology. Yet, the service expected for this equipment will always be severe. The following provisions should be made to allow continued operation in the event of a failure:

1. Level valve, major leak or pressure control failure in the degassing tank. Provide alternate inlet to primary separator. Although separation will be less efficient in this mode operation can continue.
2. The same failures can also occur in the primary separator. The liquid feed to this vessel may be bypassed to crude oil storage. In this case it will probably be necessary to increase the dosage of the dispersant.
3. If a malfunction occurs which would make the water treating tank inoperable then it must be by-passed. The dispersant should be injected at a slightly increased rate into this effluent stream.
4. The only failure that can normally occur on the flare system is a burn out of the tip. This will decrease burning efficiency and possibly increase radiant heat levels on the ship. Additional shielding or a water spray may be required.
5. If the ship for hauling the recovered crude does not show up on time, the water treating tank may be used for storage. Burning is an alternative but is not recommended since it is unlikely that it can be done in an environmentally acceptable manner.

3.5.6 Dispersant

As discussed earlier the separation system is designed to recover the maximum volume of oil possible. The large quantity of sea water anticipated will preclude the use of heat to enhance the separation. The only means utilized to achieve the desired separation are the use of a demulsifier and gravity settling. It is highly unlikely that these methods will result in water of the desired quality for disposal to the sea. The water being discarded overboard will contain some oil droplets.

The effect of these oil droplets on the ecology of the sea can be somewhat alleviated by reducing the size of the droplets. This is accomplished by the use of chemical dispersants. These chemicals are added to the water following treatment and just prior to entering the sea. Storage tanks and injection pumps are provided for the proper distribution of these chemicals. The proper injection rate must be determined by testing during operation.

3.5.7 Maintenance

The conversion of a vessel for recovery of crude from a subsurface blowout requires the erection of a number of vessels on the deck to achieve separation of the gas, oil and water lifted from the ocean floor. This vessel, when not in use for its intended purpose, will either sit idle or be utilized for early production as discussed previously.

Periodic inspections and preventive maintenance must be made to ensure the serviceability of all components when required. The main components that will require regular attention are the instrument items and pumps. The types of maintenance are cleaning, lubrication and verification of proper functioning.

18b 3.6

SECTION 3.6
OPERATIONS ANALYSIS
FINAL REPORT

0384X

3.6 OPERATIONS ANALYSIS

3.6.1 Introduction

Operation of the subsurface collector system depends on the design of the system and weather conditions at the particular site. For the purposes of this study the selected site was located somewhere along the Coast of southern California. Weather conditions in that region vary depending on latitude, and an area slightly north of Point Conception was selected for the development of design criteria. The analysis of the vessel motions and station keeping operations included ship deployment scenarios, abandonment sequences, as well as analyses for the limiting operational weather conditions. The design of the mooring and vessel positioning system follows from operational requirements. The details of deployment, positioning systems, and design criteria are provided in the following subsections.

Operating weather criteria put forth in the original scope of work initially resulted in unpracticable positioning and mooring systems and unmanageable vessel motions. More reasonable operating and abandonment conditions were determined and are given in Tables 3.6-1 and 3.6-1A.

3.6.2 Anchor Handling Scenarios

As explained in more detail later, the deployment and positioning of the collection vessel will require a heading orientation of 20° to 45° to the predominant wind direction. This will allow for toxic gasses, assumed present at the water surface in the location of the blown well, to be blown outboard and away from the quarters area of the tanker.

As a general approach, the tanker and its anchor handling spread consisting of two anchor handling vessels and a multipurpose support vessel (MSV) will move to the affected area and set up station on location using the procedures as described in the following sections.

TABLE 3.6-1

ENVIRONMENTAL CRITERIA - REGULAR WAVES

	Maximum Deployment	Maximum Operational	Abandonment
Wave Height (Significant) Double	12 ft(1)	12 ft(2)	16 ft(3)
Wind Speed (Average, 1 HR)	Beaufort 6 (25 knots)	Beaufort 9 (44 knots)	Beaufort 9
Current	2.5 knots	2.5 knots	2.5 knots

Note: Between 12 ft and 16 ft wave heights, system will be in a standby mode but remain on site (i.e. moored but collector offset from the wellhead).

(1) Limited by ship motions.
(2) Limited by 8 ft significant double amplitude vertical motion at the moonpool, bow quartering waves.
(3) Limited by ability of anchor vessels to operate.

TABLE 3.6-1A

ENVIRONMENTAL CRITERIA - SWELLS

Swell Period(Sec)	Moonpool Vertical Response (Ft/Ft) (Single Amplitude)	Limiting Wave Height(Ft)
12	0.67	24
14	0.85	19
16	0.94	17.2
18	0.97	16.4

NOTE: The analyses presented in this report assumes that the wave spectrum would be represented by a Pierson-Moscovitz spectrum which does not account for the presence of Swells. One rational way to account for Swells is to model them as a train of long period regular waves. Assuming that the Swell is unidirectional (bow quarter heading) with periods in the range of 12 to 18 seconds then the tanker vertical motion at the moonspool will be determined by its regular wave response operator. With a shut down criteria of an 8 ft. single amplitude vertical motion at the moonspool, the limiting (Swell) wave heights would be as shown above.

3.6.2.1 Deployment Procedure

On arrival at the site, the tanker will be moved slowly under its own power towards the immediate blow-out area. A heading will be maintained, using the thrusters to aid steering, where the predominant wind comes over the bow quarter. It is assumed that prior to the arrival of the tanker, the survey, navigational fixes and positioning reference grids are already set.

Two anchor handling vessels will be used to place anchors. Fig 3.6-2 shows a sequence of steps for anchor deployment:

a) At a location (8000, -5220) in (x,y) coordinates from the well site corresponding to 1,000 ft water depth, the portside anchor vessel A receives the port stern anchor (#4) together with pendant line and pendant buoy from the tanker and proceeds to lower the anchor onto the ocean bottom. Meanwhile the starboard side anchor vessel B, receives starboard stern pendant line, pendant buoy and anchor (#3) and proceeds to the starboard stern anchor location.

b) While the tanker continues to progress towards the site, anchor vessel A receives the port bow anchor, (#6), and proceeds around the site to place the anchor.

c) Anchor vessels A and B place the port and starboard bow anchors, while the tanker remains at a standby location downstream of the site.

d) Anchor vessels A and B return toward the tanker.

e) Anchor vessels A and B receive the port and starboard breast anchors, (#2) and (#5), together with pendant line and pendant buoy and proceed to their respective anchor locations.

f) This step involves two precedures. First, all anchor lines are pretensioned to a level of 400 kips to ensure that all anchors set properly in the bottom. It is usual practice to "soak" the anchors at high tension to allow proper penetration. After 2-3 hours, tensions are lowered to the operating tensions as given later. Secondly, while the mooring lines are "soaking", the anchor handling vessels deploy the collector positioning anchors, C1 to C4, around the site. The tanker then moves into the blowout area.

g) The final mooring and collector positioning pattern is set.

At normal operating speeds it should take about 45 minutes to transfer and deploy an anchor. Using two anchor vessels, 2-3 hours will be needed to place the mooring anchors and 2-3 hours will be needed for "soaking".

The deployment process will be complete within 6-8 hours under normal conditions.

3.6.2.2 Anchor Handling Vessels

These vessels must be capable of handling the 22 Ton anchors, pendant buoys, and up to 1200 feet of 2 1/2" wire rope for the pendant line. Also, in order to deploy anchors in up to 12 feet significant wave heights, and carry up to 9000 ft of 3" mooring wire rope while lowering the anchor to the bottom, at least 60 ton bollard pull will be needed. This gives the requirement for two, 7500 HP class vessels.

3.6.2.3 Approach Direction

Heading into the wind is the normal approach direction for a tanker. This minimizes loading from environmental forces and is the natural heading assumed when moored by a turret set in the forebody of the tanker. However, for this system the possibility of toxic gasses arising from the blown well must be addressed. These would progress down wind into the quarters and engine intake vents. For this

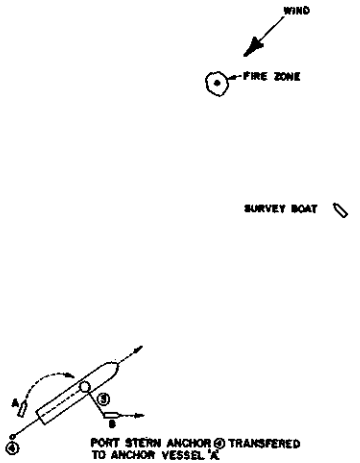

PORT STERN ANCHOR ③ TRANSFERED TO ANCHOR VESSEL 'A'.
'A' LOWERS PORT STERN ANCHOR.
'A' RETURNS TO TANKER TO RECEIVE PORT BOW ANCHOR.
'B' RECEIVES STARBOARD STERN ANCHOR ⑤.

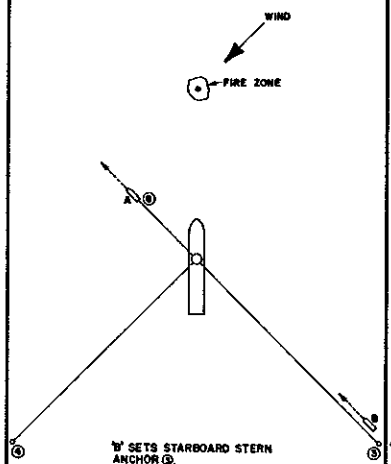

'B' SETS STARBOARD STERN ANCHOR ⑤.
'A' PROCEEDS AROUND SITE TO SET PORT BOW ANCHOR ⑥.
'B' RETURNS TO RECEIVE STARBOARD BOW ANCHOR ①.

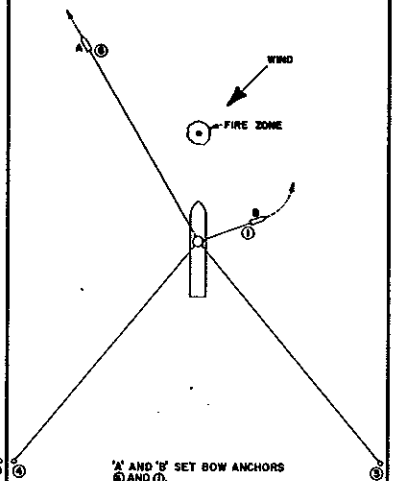

'A' AND 'B' SET BOW ANCHORS ⑥ AND ①.
TANKER APPROACHES SITE ON STANDBY.

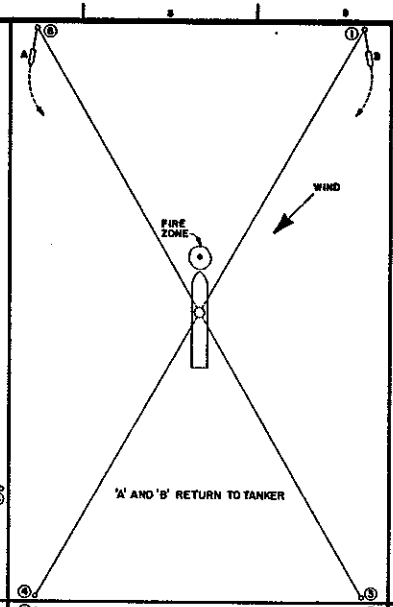

'A' AND 'B' RETURN TO TANKER

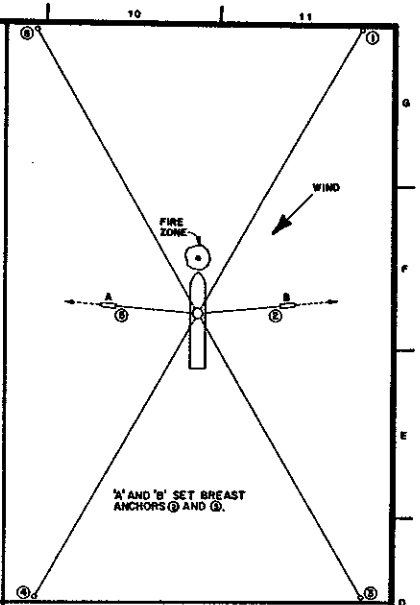

'A' AND 'B' SET BREAST ANCHORS ⑥ AND ⑤.

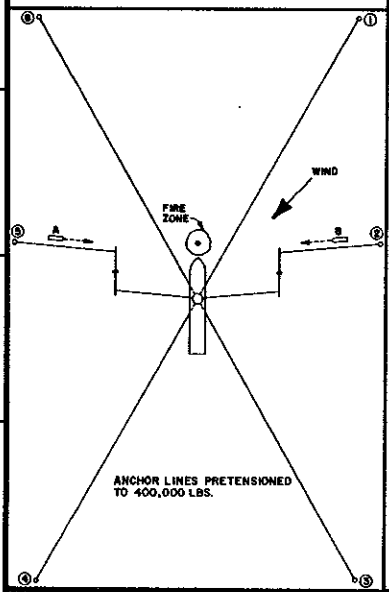

ANCHOR LINES PRETENSIONED TO 400,000 LBS.

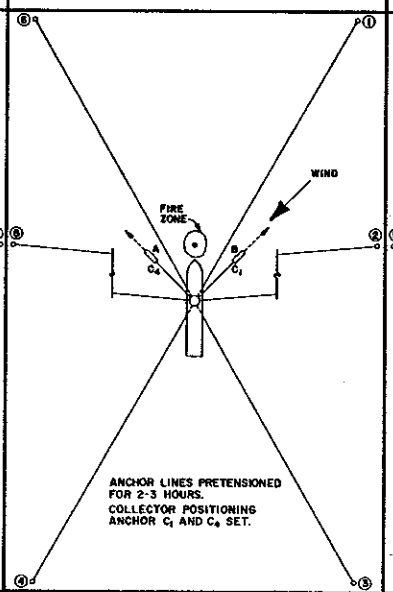

ANCHOR LINES PRETENSIONED FOR 2-3 HOURS.
COLLECTOR POSITIONING ANCHOR C_1 AND C_4 SET.

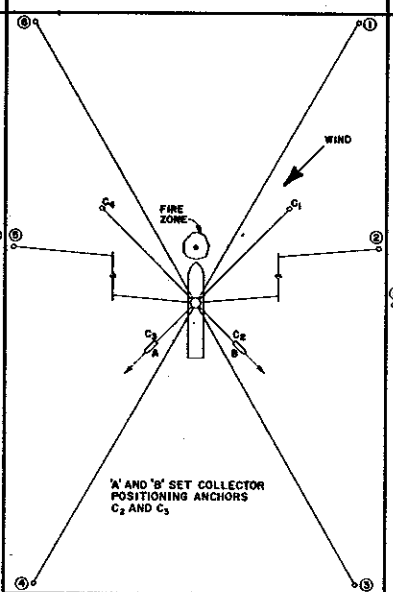

'A' AND 'B' SET COLLECTOR POSITIONING ANCHORS C_2 AND C_3

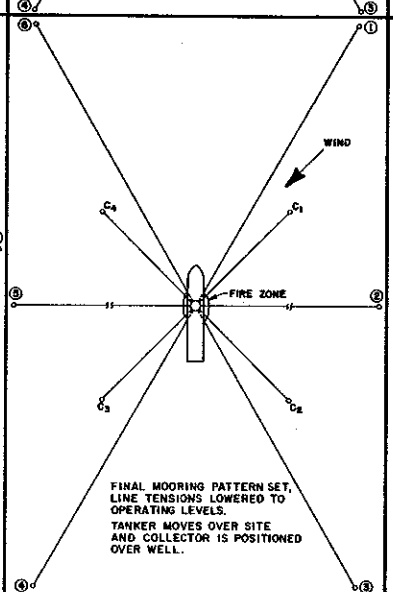

FINAL MOORING PATTERN SET, LINE TENSIONS LOWERED TO OPERATING LEVELS.
TANKER MOVES OVER SITE AND COLLECTOR IS POSITIONED OVER WELL.

NOTES

REVISIONS	BY	DATE

REVISIONS	BY	DATE

Brown & Root Development, Inc.
HOUSTON, TEXAS

DRAWN BY: J. BUNBE
DATE: 7-30-85
CHECKED BY:
DATE:
SCALE: NONE

APPROVED
APPROVED

SEAL

TITLE OF DRAWING: ANCHOR DEPLOYMENT PROCEDURE
NAME OF CLIENT: U.S. DEPARTMENT OF THE INTERIOR
MINERALS MANAGEMENT SERVICE

CONTRACT NO. XC-0030
DRAWING NO. FIGURE 3.6-2
SHEET OF

reason, an angle of attack between 20^{0} and 45^{0} to the bow has been selected as a prefered heading for both the approach and operational settings. Once positioned on station, the tanker will "weathervane" about its turret while the thrusters will maintain heading depending on predominant wind direction. As the weather direction changes, the tanker heading will also change under action of the thrusters. A complete 360^{0} rotation will be accommodated during operations as needed.

3.6.2.4 Anchor Line Tensioning

Maximum environmental conditions for system deployment correspond to 12 ft. significant wave heights with winds to force 6 on the Beaufort scale. Line tension, vessel motions, and thruster power values corresponding to these weather conditions have been calculated using in-house computer programs and are given in the following Table 3.6-3.

TABLE 3.6-3
SYSTEM LOADS

	Average	Peak
Line #1	152 kips	186 kips
Line #2	270 kips	391 kips
Line #3	260 kips	344 kips
Line #4	98 kips	107 kips
Line #5	48 kips	54 kips
Line #6	49 kips	53 kips
Surge	6 feet	21 feet
Sway	10 feet	41.5 feet
Thruster #1	2298 hp	3835 hp
Thruster #2	1860 hp	3345 hp
Thruster #3	2313 hp	3536 hp
Thruster #4	2745 hp	3550 hp

These tension values are for operating conditions. The initial "soak" for 2-3 hours at 400,000 lb. is required to set the anchors, and the operating levels are less.

At lesser environmental conditions, line tensions will be even smaller. But, they should in no case be lower than 30,000 lb. This minimal level will be required to maintain reasonable mooring line stiffness.

3.6.2.5 Abandonment Procedure

A procedure similar to the deployment sequence is suggested for making preparations to leave the site and is shown by sequentially in Figure 3.6-4. By this method, all equipment is recovered from the site. Recovery time will again be 6-8 hours, and possibly the larger value would be used for the extreme weather condition of 16 ft. significant waves and Beaufort 9 wind speeds or greater.

Sixteen ft. waves are the limit for anchor handling operations to proceed. This becomes the limit in terms of establishing the criteria for abandonment in severe weather. The abandonment procedure is given in Sect. 3.6.5.6 as Alternative No. 2.

3.6.3 Stationkeeping Analysis

The collection system be capable of continuing operations in sea states up to the limit established by the design criteria. Factors which influence the system's ability to operate include vessel motions such as heave, pitch, and roll, the horizontal excursions of the moonpool around the well site, and the mooring line tensions established by the weather conditions. The operating limits used to establish the design criteria are:

1) 8 ft. significant double amplitude vertical motion at the moonpool so that the motion compensator is still able to stabilize vertical motion of the riser, (determined by wave height and vessel wave motion response),

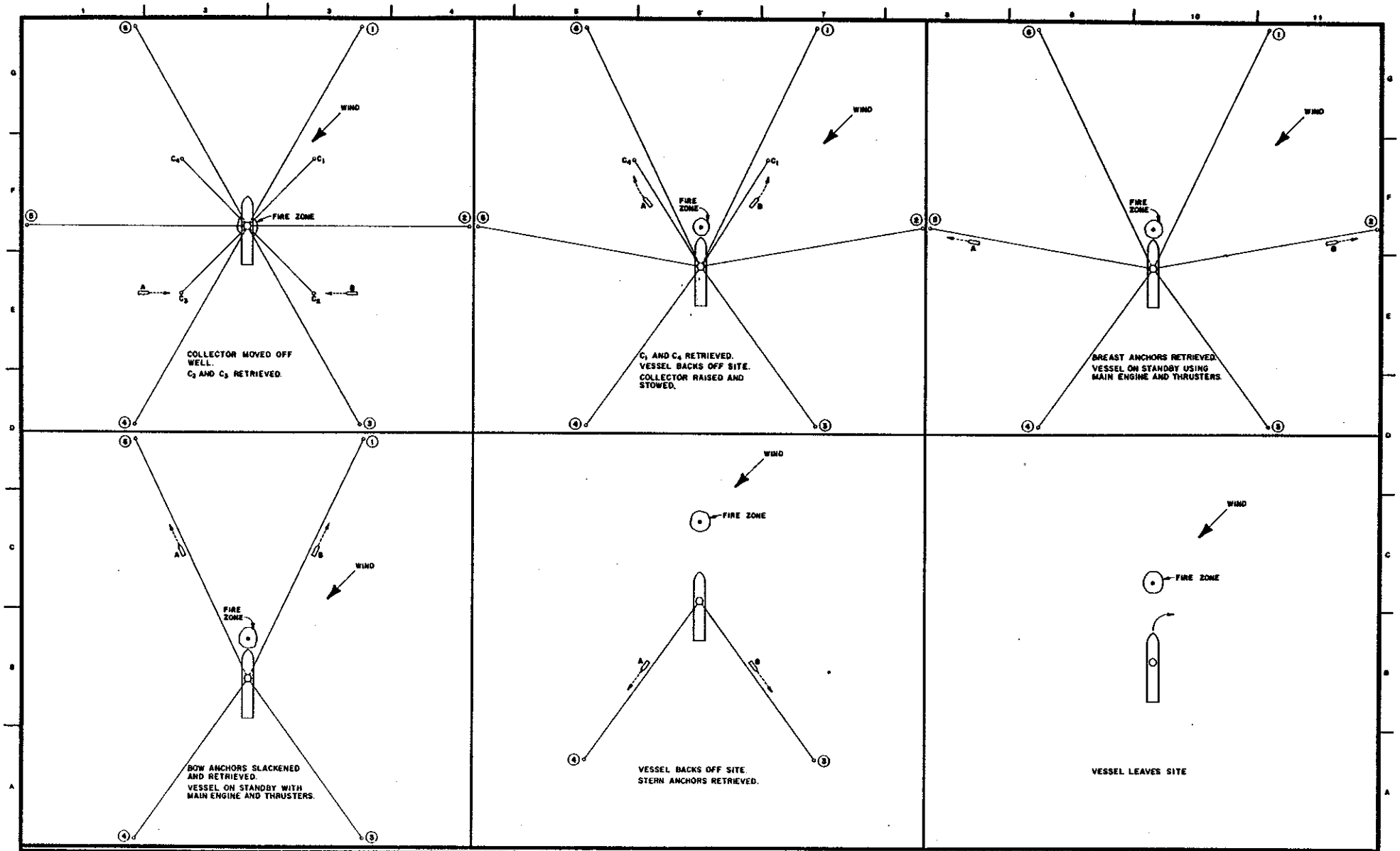

NOTES

REVISIONS	BY	DATE

REVISIONS	BY	DATE

Brown & Root Development, Inc.
HOUSTON, TEXAS

DRAWN BY: J. BUTNER
DATE: 7-31-85
CHECKED BY:
DATE:
SCALE: NONE

APPROVED
APPROVED

TITLE OF DRAWING: MOORING SYSTEM ABANDONMENT PROCEDURE
NAME OF CLIENT: U.S. DEPARTMENT OF THE INTERIOR
MINERALS MANAGEMENT SERVICE

CONTRACT NO. XC-0030
DRAWING NO. FIGURE 3.6-4
SHEET OF

2) horizontal excursions less than 6 percent of water depth so that the riser can still operate without too much angular displacement at top or bottom, and

3) line tensions less than 0.33 and 0.5 of the wire rope catalog breaking strength for operating and standby conditions to meet safety requirements. These values are established by DnV code requirement for operations in the North Sea and while not applicable here, they provide a sensible guideline for design.

The resulting stationkeeping performance and mooring and positioning systems design include environmental conditons at the site, environmental loadings on the tanker, tanker response to wave motions, and the analysis for anchor line tension and thruster sizing. These details are described in the following sub-sections.

3.6.3.1 Weather Conditions at the Site

Weather conditions along the West Coast U.S.A. are described in several reports. BARDI has access to results using hindcast statistical modelling with the U.S. Navy Statistical Ocean Wave Model (SOWM) data and weather data published separately by the U.S. Naval Weather Service Command. The latter was used here as a resource for establishing conditions at a point slightly north of Point Conception. Weather data is available on a month by month basis for wave height, period, and direction. Wind speed, direction, and wind-wave correlations are also available.

Table 3.6-5 and Figure 3.6-6 show the cumulative probability of occurrence of 1 hour average wind speeds for the location (36°-38°N, 126°W). The data shows that wind conditions in excess of Beaufort 9 occur annually at less than 5 percent probability, so the system should have an operability of about 346 days per year. 82 percent of the time (299 days per year) wind conditions will be less than force 6 on the Beaufort scale.

Figure 3.6-8, and Table 3.6-7 illustrate the cumulative probability of occurrence for wave heights. Wave conditions with greater than 20 ft significant heights are apparently rare and would be expected to occur at a probability of 0.6 percent. Waves greater than 16 ft significant height occur with a 2.4 percent probability, meaning that wave conditions are not likely to cause an abandonment more than 8-9 days in the year. Wave conditions and vessel motions are expected to prevent continuous collection operations with a 6.4 percent probability (23 days per year) even though the vessel would remain on station in a standby mode.

A maximum tidal plus wind driven current value of 2.5 knots was assumed for the purpose of establishing design data.

3.6.3.2 Environmental Loadings on the Tanker

To establish the requirements for mooring, the loadings on the tanker from environmental sources, (i.e. wind, wave, and current), need to be considered. These loads must be overcome by the combined mooring and thruster systems.

Wave Loads

Wave loading can be separated into two components; first order wave effects and second order drift effects.

The first order wave forces arise primarily from water particle acceleration and give large random loads with period duration similar to the waves themselves. The wave periods are short (3-20 seconds) and cause motions that are not controllable using dynamic response/ positioning systems. The second order drift loads result from amplitude variations in successive waves, and have long period components that force much larger excursions with moored vessels. These long period drift motions at 100-200 seconds are controllable using dynamic/response positioning systems.

PERIOD: (PRIMARY)
(OVER-ALL) 1963-1968

WIND SPEED (KTS) VS SEA HEIGHT (FT)

HGT	0-3	4-10	11-21	22-33	34-47	48+	TOTAL OBS
<1	3.0	4.3	.7	*	.0	.0	511
1-2	1.0	11.0	8.4	.9	*	.0	1357
3-4	.3	7.4	15.7	3.2	.1	*	1697
5-6	.2	2.7	11.1	3.5	.2	.0	1126
7	*	.8	6.9	4.0	.3	.0	766
8-9	*	.3	2.6	3.7	.4	.0	443
10-11	.0	.1	1.1	2.1	.3	.0	231
12	.0	*	.4	.9	.2	*	98
13-16	.0	.1	.2	.9	.5	.0	107
17-19	.0	.0	*	.1	*	.0	10
20-22	.0	.0	*	*	.1	.0	9
23-25	.0	.0	.0	*	.0	.0	2
26-32	.0	.0	.0	*	*	.0	3
33-40	.0	.0	.0	.0	.0	.0	0
41-48	.0	.0	.0	.0	.0	.0	0
49-60	.0	.0	.0	.0	.0	.0	0
61-70	.0	.0	.0	.0	.0	.0	0
71-86	.0	.0	.0	.0	.0	.0	0
87+	.0	.0	.0	.0	.0	.0	0
TOTAL	291	1698	3004	1228	137	2	6360
PCT	4.6	26.7	47.2	19.3	2.2	*	100.0

PERCENT FREQUENCY OF WAVE HEIGHT (FT) VS WAVE PERIOD (SECONDS)

PERIOD (SEC)	<1	1-2	3-4	5-6	7	8-9	10-11	12	13-16	17-19	20-22	23-25	26-32	33-40	41-48	49-60	61-70	71-86	87+	TOTAL	MEAN HGT
<6	1.4	9.8	14.6	6.5	3.8	1.1	.5	.2	.1	*	.0	.0	.0	.0	.0	.0	.0	.0	.0	2817	3
6-7	*	1.1	6.3	7.8	6.2	3.2	1.7	.5	.3	.1	.1	*	.0	.0	.0	.0	.0	.0	.0	2016	5
8-9	.0	.3	1.8	3.0	4.0	3.3	2.1	.9	.8	.1	.1	*	.0	.0	.0	.0	.0	.0	.0	1209	7
10-11	.0	.2	.6	1.1	1.7	1.7	.9	.6	.7	.1	*	*	*	*	.0	.0	.0	.0	.0	563	8
12-13	.0	.1	.2	.3	.5	.5	.5	.4	.4	.1	.1	*	*	*	.0	.0	.0	.0	.0	240	9
>13	*	.1	.1	.1	.2	.3	.3	.1	.2	*	*	*	*	.0	.0	.0	.0	.0	.0	112	8
INDET	2.5	1.2	.6	.6	.4	.1	.1	.1	.1	*	*	.0	*	.0	.0	.0	.0	.0	.0	430	2
TOTAL	286	947	1794	1438	1239	759	454	204	203	28	19	9	5	2	0	0	0	0	0	7387	5
PCT	3.9	12.8	24.3	19.5	16.8	10.3	6.1	2.8	2.7	.4	.3	.1	.1	*	.0	.0	.0	.0	.0	100.0	

TABLE 3.6-5

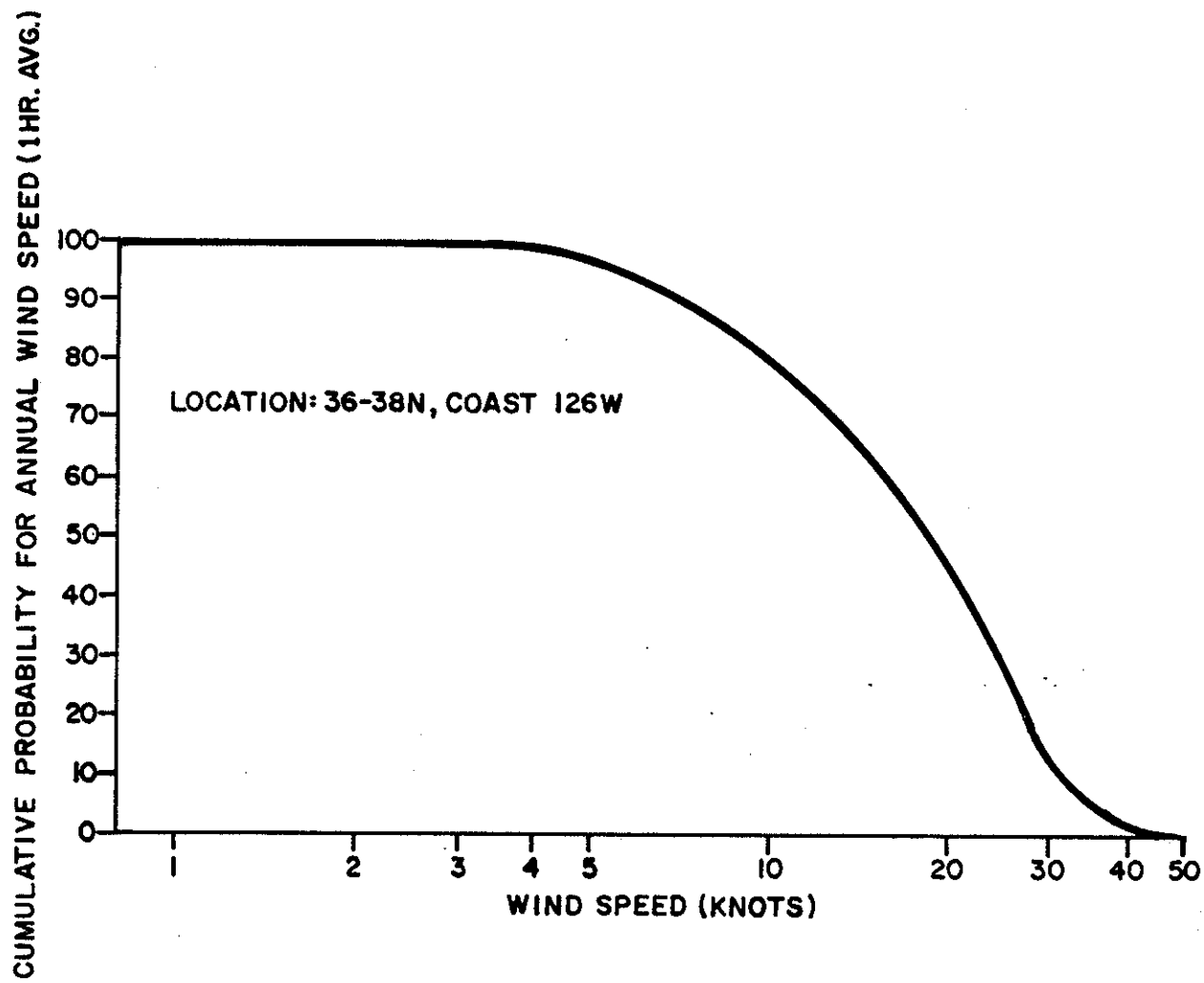

U.S. DEPARTMENT OF THE INTERIOR MINERALS MANAGEMENT SERVICE	SCALE: NONE	TITLE OF DRAWING:
	DRAWN BY: R.VYBIRAL DATE 7-31-85	CUMULATIVE PROBABILITY FOR
Brown & Root Development, Inc. HOUSTON, TEXAS	CHECKED BY: DATE 8-19-85	ANNUAL WIND SPEED
	APPROVED: EGP DATE 8-20-85	
	CUSTOMER APPROVAL	CONTRACT NUMBER XC-0030 / DRAWING NUMBER FIGURE 3.6-6

PERIOD: (PRIMARY) 1949-1969
(OVER-ALL) 1854-1968

WND DIR	WIND SPEED (KNOTS) 0-3	4-10	11-21	22-33	34-47	48+	TOTAL OBS	PCT FREQ	MEAN SPD
N	.5	3.1	5.6	2.8	.3	*	4453	12.3	16.3
NNE	.2	.8	.9	.2	*	.0	789	2.2	12.9
NE	.2	.8	.4	.1	*	.0	517	1.4	10.2
ENE	.1	.5	.3	*	*	.0	337	.9	9.7
E	.2	.6	.3	*	*	.0	421	1.2	8.4
ESE	.1	.5	.2	*	.0	.0	326	.9	8.5
SE	.3	.9	.6	.2	.1	*	743	2.1	11.6
SSE	.2	1.0	1.1	.4	.1	*	987	2.7	14.3
S	.4	1.9	1.7	.5	.1	.0	1648	4.6	12.5
SSW	.2	1.2	1.0	.2	*	*	965	2.7	11.7
SW	.3	1.8	1.1	.2	*	.0	1225	3.4	10.3
WSW	.3	1.7	.9	.1	*	.0	1086	3.0	9.9
W	.6	3.2	2.0	.3	*	*	2200	6.1	10.3
WNW	.4	3.2	3.4	.7	.1	.0	2787	7.7	12.6
NW	.6	6.0	11.2	4.2	.2	*	8075	22.4	15.7
NNW	.3	4.3	11.8	6.7	.6	*	8552	23.7	17.9
VAR	*	*	.0	.0	.0	.0	11	*	2.5
CALM	2.7						975	2.7	.0
TOT	2718	11387	15372	6002	601	17	36097	100.0	14.2
PCT	7.5	31.5	42.6	16.6	1.7	*	100.0		

TABLE 3A

WND DIR	WIND SPEED (KNOTS) 0-6	7-16	17-27	28-40	41+	TOTAL OBS	PCT FREQ	MEAN SPD
N	2.1	6.2	4.9	1.3	*	5242	14.5	15.6
NE	.8	1.2	.3	*	*	854	2.4	10.0
E	.9	1.0	.2	*	.0	747	2.1	8.5
SE	1.3	2.1	1.0	.3	*	1730	4.8	13.1
S	1.8	3.6	1.5	.3	*	2613	7.2	12.2
SW	2.1	3.5	.7	.1	*	2311	6.4	10.1
W	3.3	7.9	2.3	.3	*	4987	13.8	11.6
NW	4.0	15.6	18.5	3.9	.1	16627	46.1	16.8
VAR	*	.0	.0	.0	.0	11	*	2.5
CALM	2.7					975	2.7	.0
TOT	6873	16262	10621	2247	94	36097	100.0	14.2
PCT	19.0	45.1	29.4	6.2	.3	100.0		

TABLE 3.6-7

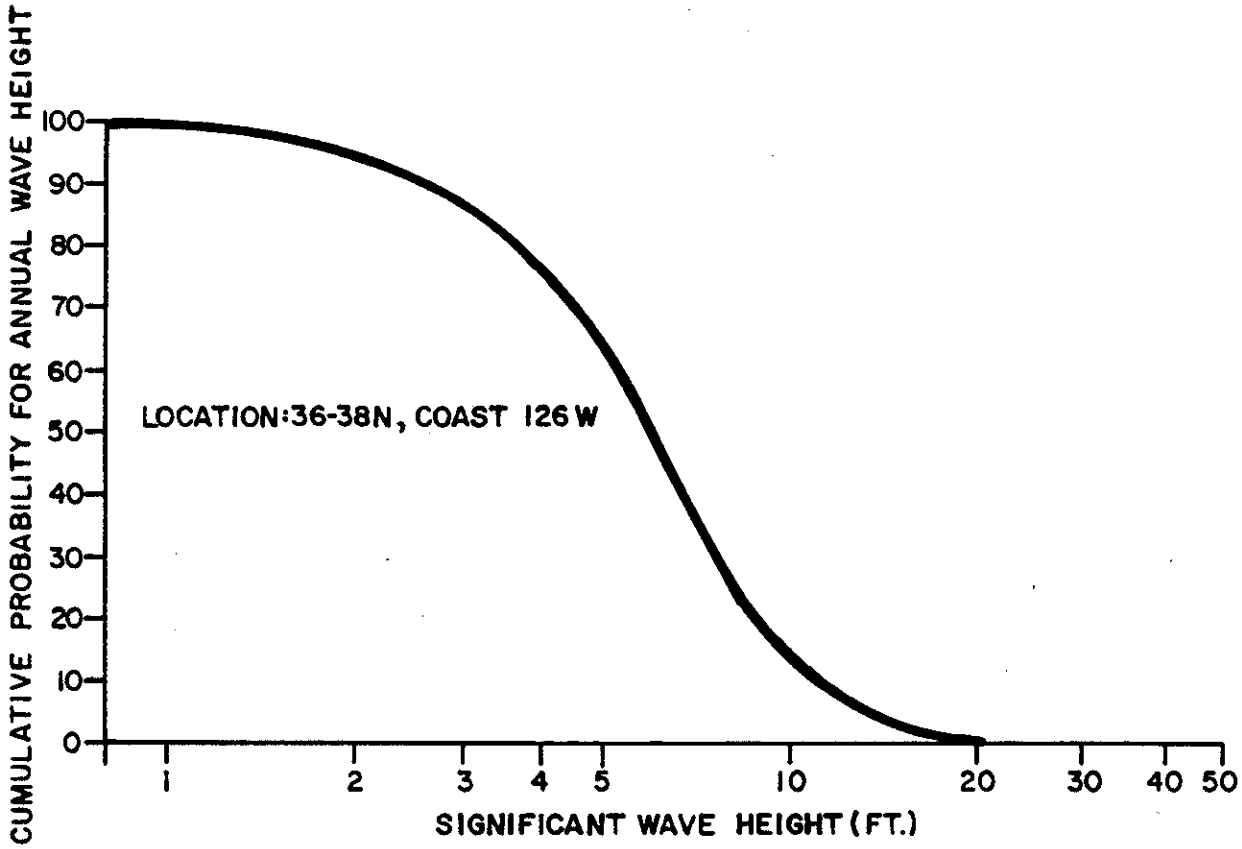

U.S. DEPARTMENT OF THE INTERIOR
MINERALS MANAGEMENT SERVICE

Brown & Root Development, Inc.
HOUSTON, TEXAS

SCALE: NONE	TITLE OF DRAWING: CUMULATIVE PROBABILITY FOR ANNUAL WAVE HEIGHT
DRAWN BY: R.VYBIRAL DATE 7-31-85	
CHECKED BY: DATE 8/19/85	
APPROVED: EEP DATE 8-20-85	
CUSTOMER APPROVAL	CONTRACT NUMBER XC-0030 / DRAWING NUMBER FIGURE 3.6-8

Major premises used in this work for simulating wave loading are:

- o that first order and second order wave forces can be separated,
- o that first order wave induced motions are independent of the slow drift and other operational movements,
- o that the total motion of the vessel can be represented as the sum of first order wave induced motions, the slow drift motions and other operational movements.

The vessel first order motions have been found by a separate computation of the first order motion response operators (R.A.O.). When combined with wave spectra, these operators can be used to compute vessel first order motions. The slow drift effects have been found from solution of vessel equations of motion, using analytical models for the second order wave forces and mooring system spring characteristics. Table 3.6-9 shows the vessel six degrees of motion R.A.O. Table 3.6-10 shows the 2nd order drift force coefficients.

Current Loads

Current loads, F_c, were computed as $F_c = C_c\ V_c\ V_c$.

C_c, the drag coefficient, which is related to the vessel projected wetted area along each axis of the vessel and water characteristics properties, was obtained using the information in "Prediction of Wind and current loads on VLCCs" by OCIMF (Oil Companies International Marine Forum). V_c is the normal component of relative velocity between the water and vessel. Figure 3.6-11 shows the conventions for the flow angle of attack and force/moment. Table 3.6-12 gives the drag coefficients used in this analysis. Fig 3.6-13 to 15 show the current force/moment coefficients acting on the vessel versus current angle of attach from OCIMF report. Figures 3.6-16 to 18 show the current force/moment acting on vessel at force 9 Beaufort level.

Wind Loads

The wind force/moment is computed using coefficient C_w and wind speed V_w. Wind force/moment, F_w, are proportional to the square of the wind speed. The value of C_w depends on the angle of attack.

$$F_w = C_w V_w^2$$

Figures 3.6-19 to 21 show wind force/moment coefficients, C_w, which were also obtained from OCIMF report mentioned above. Figures 3.6-22 to 24 show wind force/moment acting on the vessel at the force 9 Beaufort level. Figures 3.6-25 to 27 represent the total static environmental loads acting on the vessel at force 9 Beaufort level.

3.6.3.3 Mooring Systems Description

Based on the calculated environmental loads under the established maximum operating conditions, a mooring system has been designed consisting of a large turret, 72 feet in overall diameter, located in the forebody of the tanker.

The turret contains the moonpool through which the riser is deployed, six mooring winches and fairleaders, and collector anchoring winches (see Fig. 3.6-28). The mooring winches used are capable of storing 10,000 ft. of 3 inch diameter IWRC wire rope. Each mooring system consists of a mooring winch, fairleader, pendant buoy, pendant wire with spool, and a 22 Ton Delta Flipper anchor. Anchor considerations are listed separately in Table 3.6-29.

**** REGULAR WAVE RESPONSES ABOUT RANGE CG ****

WAVE FREQUENCY (RAD/SEC)	WAVE PERIOD (SEC)	HEAVE AMP (PHASE) (FT/FT)**(DEG)	SWAY AMP (PHASE) (FT/FT)**(DEG)	SURGE AMP (PHASE) (FT/FT)**(DEG)	ROLL AMP (PHASE) (RAD/RAD)**(DEG)	PITCH AMP (PHASE) (RAD/RAD)**(DEG)	YAW AMP (PHASE) (RAD/RAD)**(DEG)
0.209	30.00	0.990(1.5)	0.665(-90.8)	0.0 (0.0)	0.665(-91.6)	1.096(-91.0)	0.663(25.0)
0.259	24.30	0.973(2.8)	0.638(-91.1)	0.0 (0.0)	0.662(-92.5)	1.103(-89.6)	0.597(14.4)
0.308	20.42	0.942(4.9)	0.600(-91.5)	0.0 (0.0)	0.706(-93.4)	1.099(-87.9)	0.551(7.0)
0.357	17.61	0.889(8.1)	0.547(-91.8)	0.0 (0.0)	0.743(-94.5)	1.083(-85.5)	0.506(1.2)
0.406	15.48	0.808(13.5)	0.479(-91.9)	0.0 (0.0)	0.820(-95.5)	1.059(-81.9)	0.456(-3.9)
0.455	13.81	0.666(22.6)	0.397(-91.0)	0.0 (0.0)	1.031(-88.6)	1.003(-76.2)	0.399(-8.8)
0.504	12.47	0.505(34.0)	0.288(-84.8)	0.0 (0.0)	1.766(-44.0)	0.910(-66.4)	0.335(-13.9)
0.553	11.36	0.258(71.1)	0.176(-94.7)	0.0 (0.0)	0.638(73.6)	0.728(-50.9)	0.271(-19.4)
0.602	10.43	0.060(171.3)	0.093(-84.4)	0.0 (0.0)	0.103(75.8)	0.455(-33.6)	0.203(-24.9)
0.651	9.65	0.117(-111.4)	0.033(-29.9)	0.0 (0.0)	0.005(170.0)	0.220(-22.3)	0.137(-30.9)
0.700	8.97	0.104(-102.6)	0.059(40.8)	0.0 (0.0)	0.029(-121.9)	0.063(-19.8)	0.078(-37.6)
0.750	8.38	0.077(-106.0)	0.084(51.2)	0.0 (0.0)	0.021(-124.5)	0.021(-30.6)	0.029(-98.1)
0.799	7.87	0.049(-118.3)	0.082(53.2)	0.0 (0.0)	0.012(-131.0)	0.003(-157.3)	0.006(167.5)
0.848	7.41	0.027(-131.6)	0.058(53.9)	0.0 (0.0)	0.005(-144.2)	0.008(143.4)	0.023(133.4)
0.897	7.01	0.010(-141.4)	0.023(61.4)	0.0 (0.0)	0.001(159.7)	0.006(120.8)	0.027(124.0)
0.946	6.64	0.002(-31.2)	0.012(-172.6)	0.0 (0.0)	0.001(66.1)	0.005(101.8)	0.020(115.4)
0.995	6.31	0.008(-7.6)	0.029(-155.3)	0.0 (0.0)	0.000(-53.0)	0.002(84.2)	0.009(103.9)
1.044	6.02	0.009(-12.2)	0.030(-150.8)	0.0 (0.0)	0.001(-116.9)	0.000(-55.2)	0.001(-32.0)
1.093	5.75	0.005(-14.3)	0.017(-159.4)	0.0 (0.0)	0.001(-127.3)	0.001(-109.6)	0.006(-78.5)
1.142	5.50	0.001(25.8)	0.002(-79.9)	0.0 (0.0)	0.000(-117.6)	0.001(-121.5)	0.006(-91.1)

TABLE 3.6-9

Frequency (Rad/sec)	Surge Drifting Force Coefficient	Sway Drifting Force Coefficient
0.20944	0.01022	0.01022
0.28109	0.02955	0.02955
0.35274	0.06500	0.06500
0.42439	0.11956	0.11956
0.49604	0.19224	0.19224
0.63934	0.27669	0.27669
0.63934	0.36260	0.36260
0.71099	0.43995	0.43995
0.78264	0.50242	0.50242
0.85429	0.54772	0.54772
0.92595	0.57599	0.57599
0.99760	0.58839	0.58839
1.06925	0.58662	0.58662
1.14090	0.57299	0.57299
1.21255	0.55036	0.55036
1.28420	0.52206	0.52206
1.35585	0.49154	0.49154
1.42750	0.46202	0.46202
1.49915	0.43609	0.43609
1.57080	0.40430	0.40430

DRIFTING FORCE COEFFICIENTS

TABLE 3.6-10

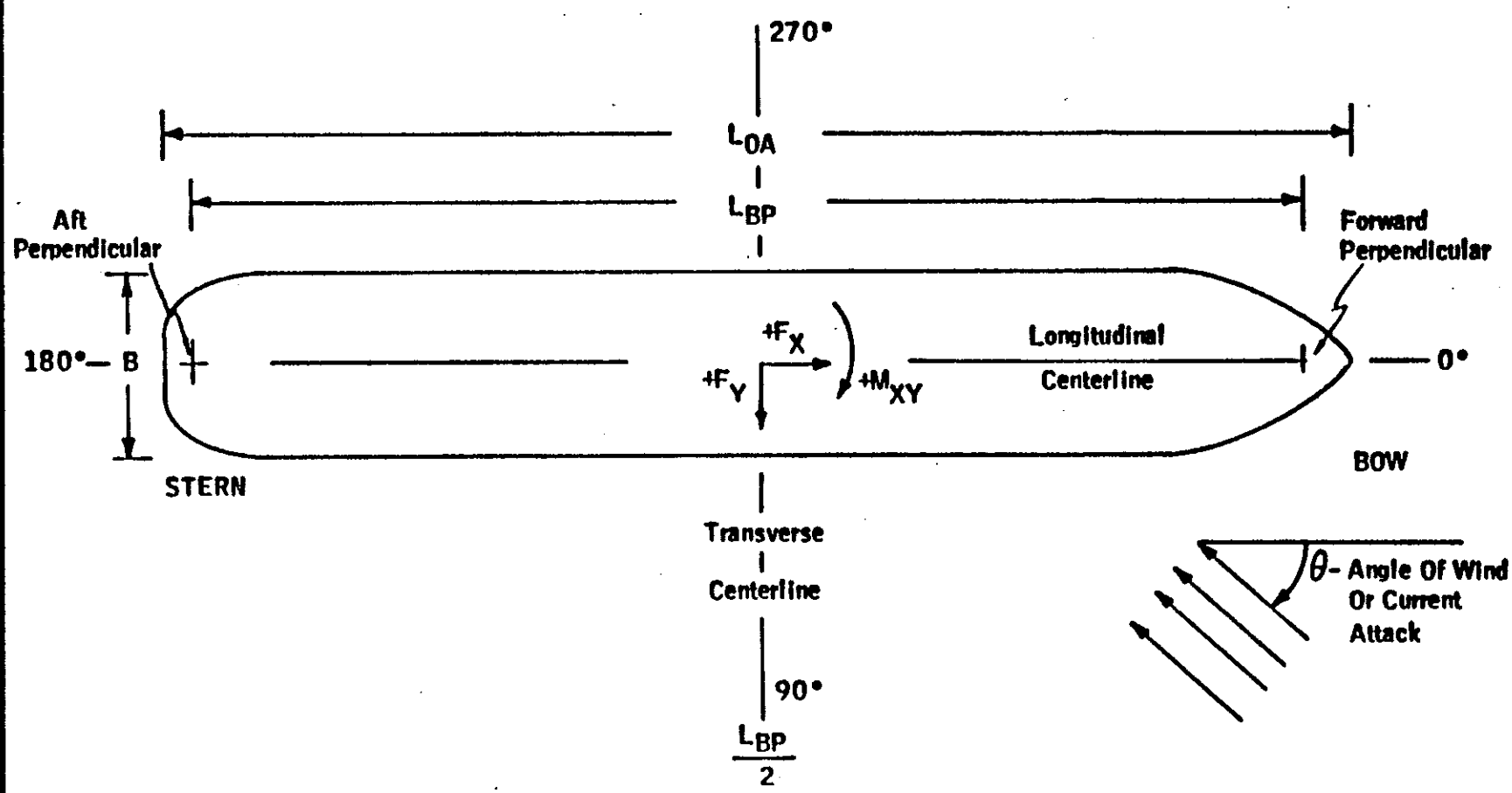

NOTE: Coefficients presented in this report are for wind and current angles of attack from 0-180 degrees but are also valid for angles from 181-359 degrees with the appropriate sign changes.

U.S. DEPARTMENT OF THE INTERIOR
MINERALS MANAGEMENT SERVICE

Brown & Root Development, Inc.
HOUSTON, TEXAS

SCALE: NONE
DRAWN BY: A. FOX DATE 8-5-85
CHECKED BY: DATE 8/19/85
APPROVED: DATE 8-20-85
CUSTOMER APPROVAL

TITLE OF DRAWING: SIGN CONVENTION AND COORDINATE SYSTEM

CONTRACT NUMBER XC-0030

DRAWING NUMBER FIGURE 3.6-11

HEADING	WIND FORCE COEFF.			CURRENT FORCE COEFF.		
	X	Y	M	X *	Y	M
0°	-0.95	0	0	-0.08	0	0
11.25	-0.90	-0.1	0.008	-0.05	-0.08	-0.02
22.5	-0.8	-0.2	0.024	0°	-0.16	-0.04
33.75	-0.65	-0.3	0.036	0.07	-0.26	-0.045
45.00	-0.55	-0.5	0.06	0.1	-0.36	-0.05
56.25	-0.4	-0.6	0.076	0.06	-0.46	-0.045
67.5	-0.23	-0.67	0.090	0	-0.525	-0.03
78.75	-0.1	-0.7	0.102	-0.03	-0.56	-0.015
90.00	0.05	-0.71	0.11	0	-0.6	0.01
101.25	0.15	-0.71	0.128	0	-0.6	0.04
112.5	0.23	-0.70	0.152	-0.03	-0.56	0.06
123.75	0.315	-0.66	0.166	-0.04	-0.48	0.08
135.00	0.43	-0.59	0.165	-0.05	-0.36	0.080
146.25	0.61	-0.47	0.152	0.00	-0.28	0.07
157.5	0.70	-0.40	0.126	0.05	-0.2	0.065
168.75	0.76	-0.14	0.07	0.08	-0.08	0.04
180.00	0.75	0	0	0.1	0	0

* CURRENT FORCE IN X-DIRECTION SHOWS NO CONSISTENCE WITH CURRENT DIRECTION.

TABLE 3.6-12

COEFFS OF WIND AND CURRENT LOADS FROM OCIMF REPORT

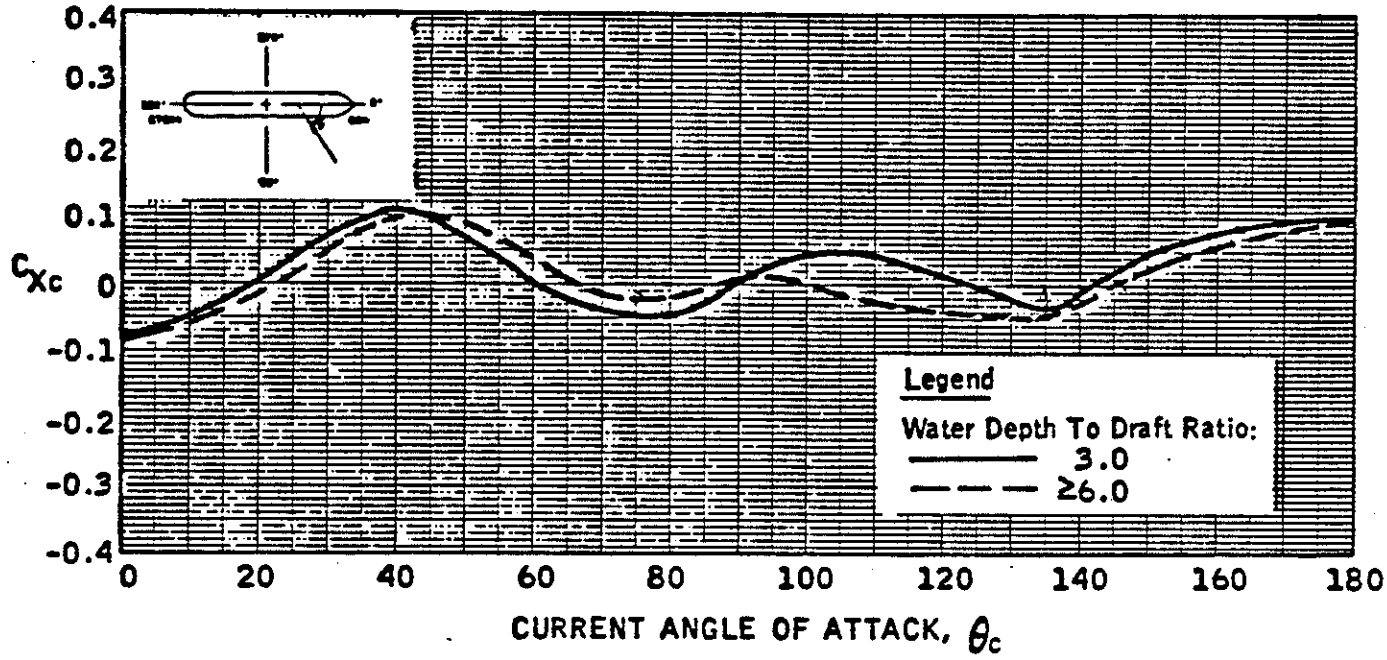

U.S. DEPARTMENT OF THE INTERIOR MINERALS MANAGEMENT SERVICE	SCALE: NONE	TITLE OF DRAWING:
Brown & Root Development, Inc. HOUSTON, TEXAS	DRAWN BY: A.FOX DATE 8-6-85 CHECKED BY: DATE 8/19/85 APPROVED: EEP DATE 8-20-85 CUSTOMER APPROVAL	LONGITUDINAL CURRENT FORCE COEFFICIENT FOR WATER DEPTH TO DRAFT RATIOS OF 3.0-6.0 C_{Xc}
		CONTRACT NUMBER XC-0030 / DRAWING NUMBER FIGURE 3.6-13

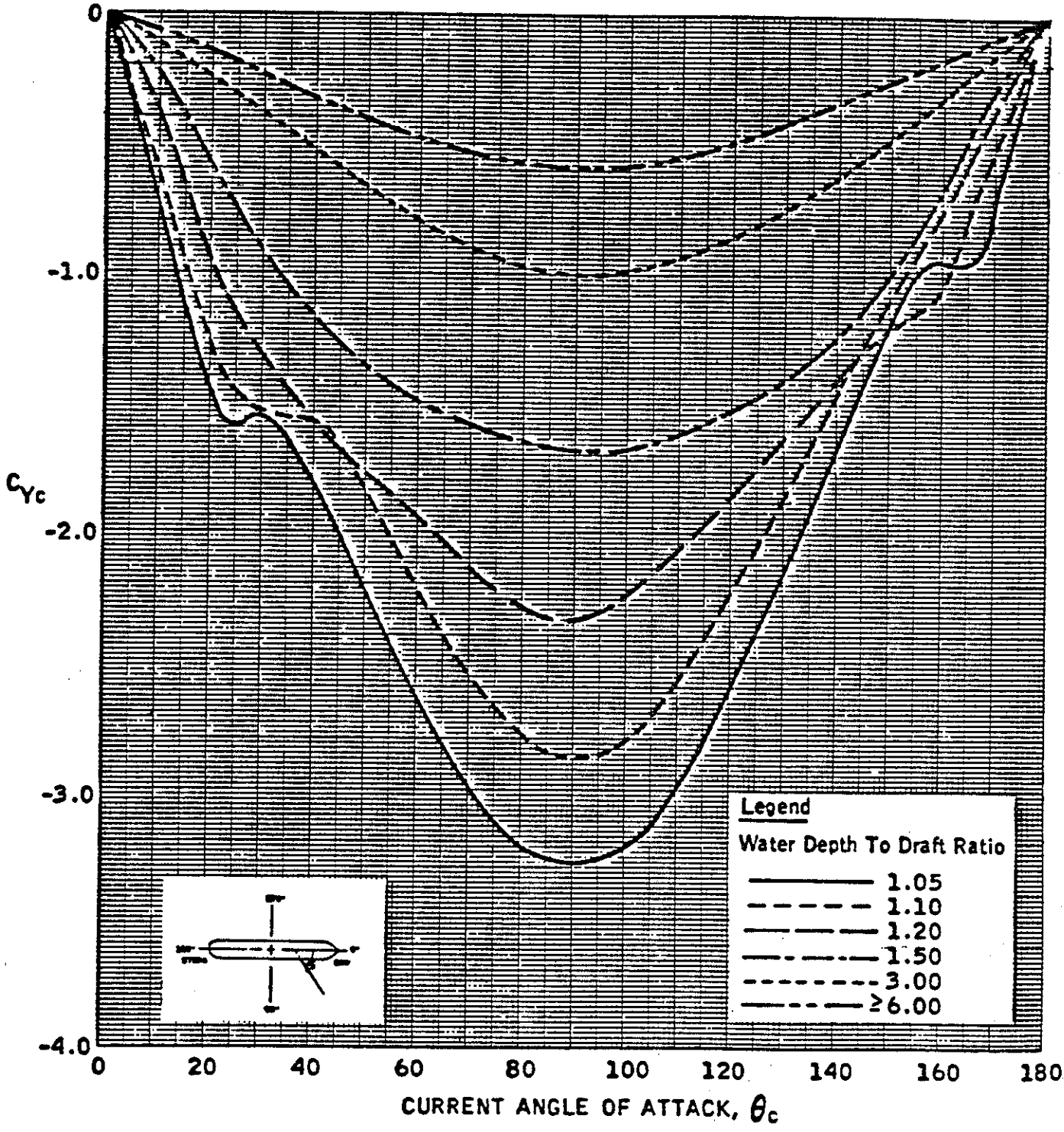

U.S. DEPARTMENT OF THE INTERIOR MINERALS MANAGEMENT SERVICE	SCALE: NONE	TITLE OF DRAWING:	
	DRAWN BY: A.FOX DATE 8-6-85	LATERAL CURRENT FORCE	
Brown & Root Development, Inc. HOUSTON, TEXAS	CHECKED BY: DATE 8/9/85	COEFFICIENT C_{Yc}	
	APPROVED: DATE 8-20-85		
	CUSTOMER APPROVAL	CONTRACT NUMBER XC-0030	DRAWING NUMBER FIGURE 3.6-14

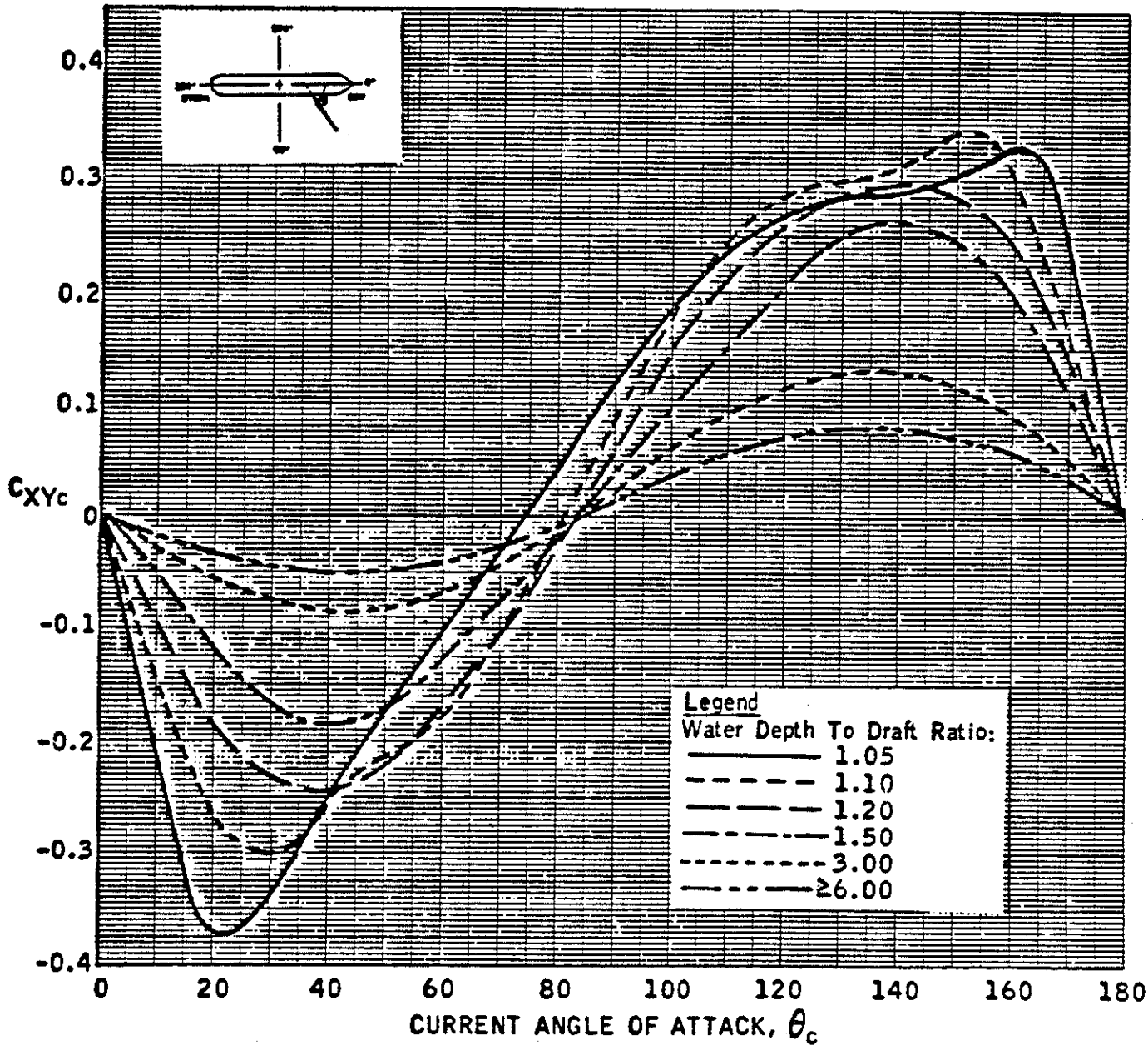

U.S. DEPARTMENT OF THE INTERIOR MINERALS MANAGEMENT SERVICE	SCALE: NONE	TITLE OF DRAWING:	
	DRAWN BY: A. FOX DATE 8-6-85	CURRENT YAW MOMENT	
Brown & Root Development, Inc. HOUSTON, TEXAS	CHECKED BY: DATE 8/19/85	COEFFICIENT C_{XYc}	
	APPROVED: EEP DATE 8-20-85		
	CUSTOMER APPROVAL	CONTRACT NUMBER XC-0030	DRAWING NUMBER FIGURE 3.6-15

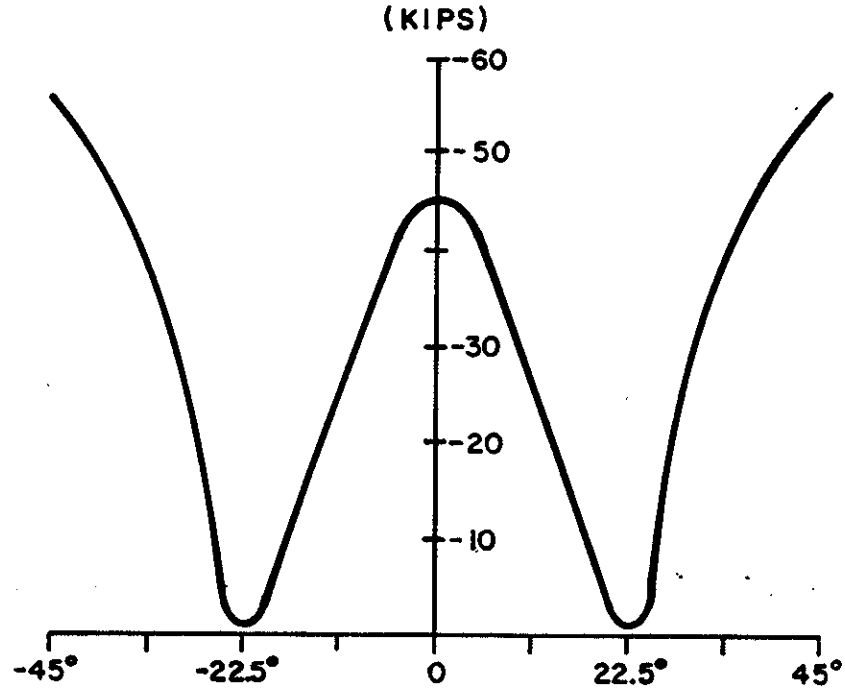

U.S. DEPARTMENT OF THE INTERIOR
MINERALS MANAGEMENT SERVICE

Brown & Root Development, Inc.
HOUSTON, TEXAS

SCALE: NONE	TITLE OF DRAWING: CURRENT FORCE IN LONGITUDINAL DIRECTION vs. ANGLE OF ATTACK AT B-9
DRAWN BY: R.VYBIRAL DATE 7-30-85	
CHECKED BY: DATE 8/19/85	
APPROVED: DATE 8-20-85	
CUSTOMER APPROVAL	CONTRACT NUMBER XC-0030 / DRAWING NUMBER FIGURE 3.6-16

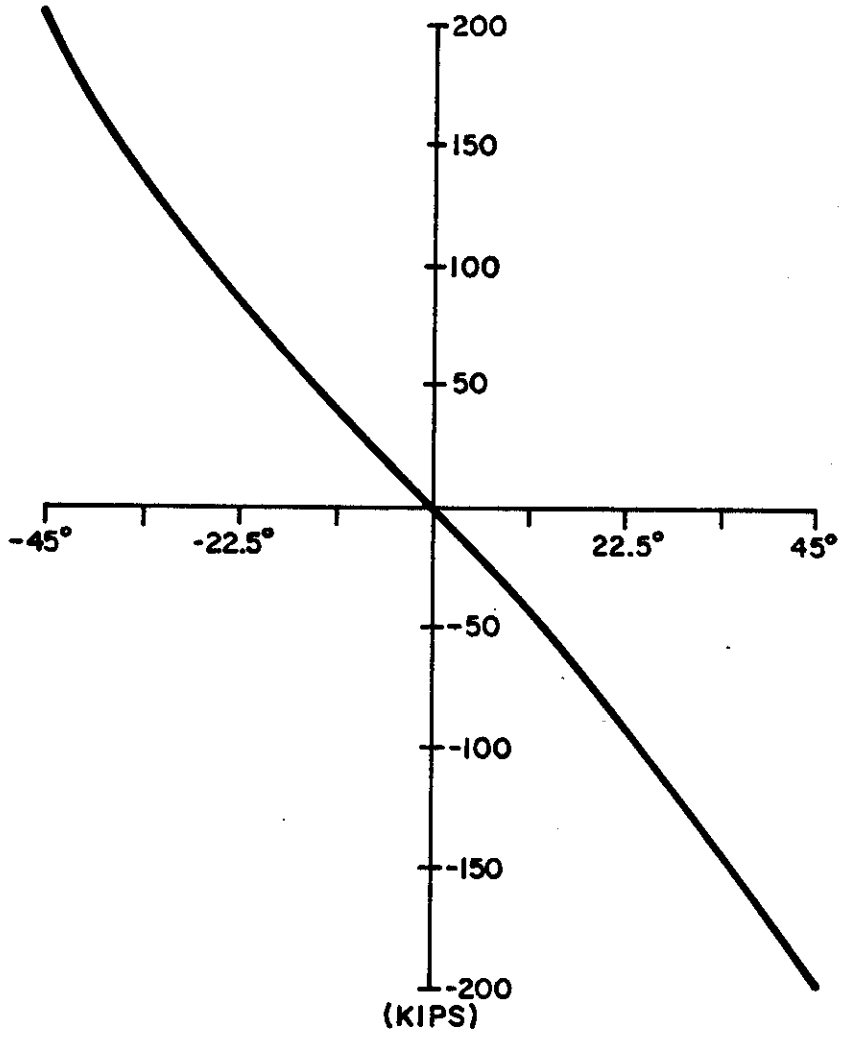

U.S. DEPARTMENT OF THE INTERIOR
MINERALS MANAGEMENT SERVICE

Brown & Root Development, Inc.
HOUSTON, TEXAS

SCALE: NONE	TITLE OF DRAWING: CURRENT FORCE IN LATERAL DIRECTION vs. ANGLE OF ATTACK AT B-9
DRAWN BY: R.VYBIRAL DATE 7-30-85	
CHECKED BY: DATE 8/19/85	
APPROVED: EEP DATE 8-20-85	
CUSTOMER APPROVAL	CONTRACT NUMBER XC-0030 / DRAWING NUMBER FIGURE 3.6-17

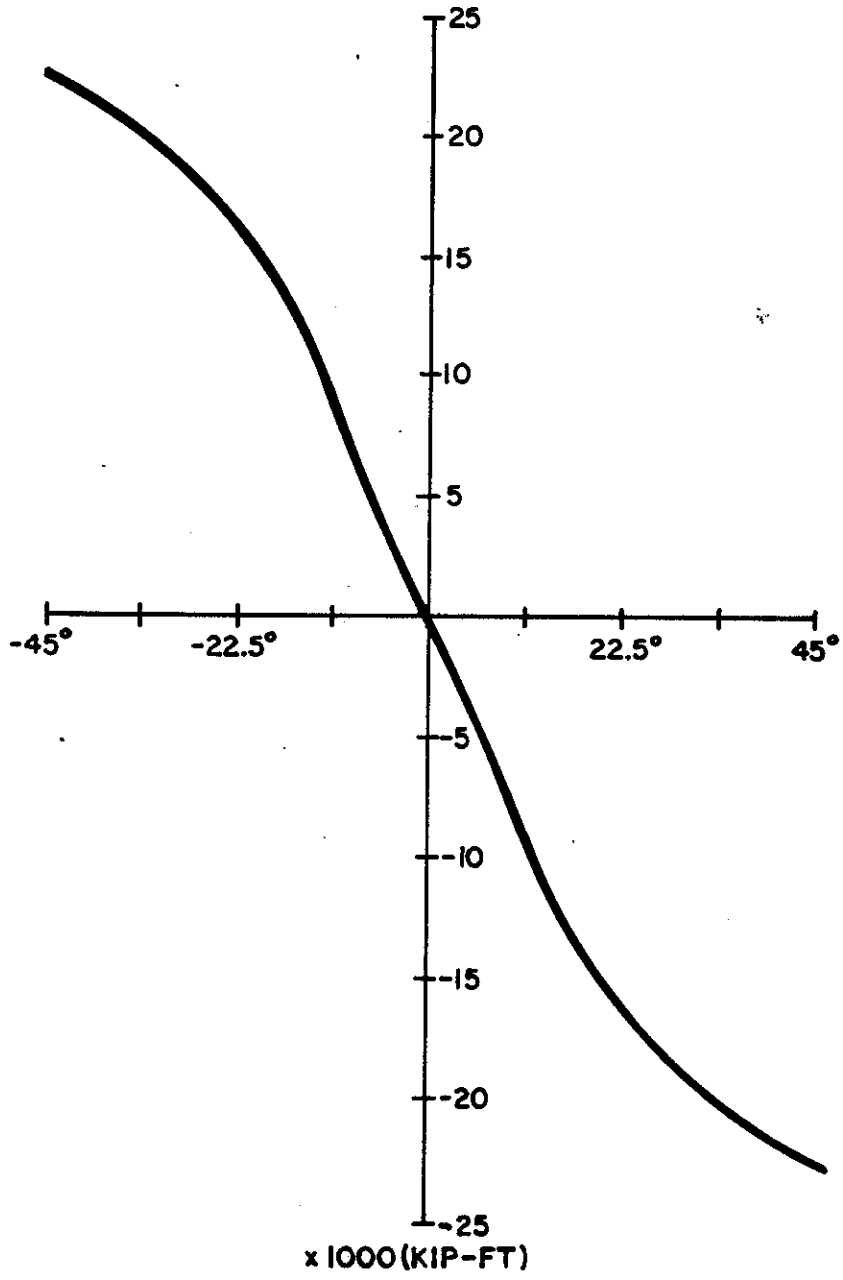

U.S. DEPARTMENT OF THE INTERIOR
MINERALS MANAGEMENT SERVICE

Brown & Root Development, Inc.
HOUSTON, TEXAS

SCALE: NONE	TITLE OF DRAWING: CURRENT MOMENT vs. ANGLE OF ATTACK AT B-9
DRAWN BY: R.VYBIRAL DATE 7-30-85	
CHECKED BY: DATE 8/19/85	
APPROVED: EEP DATE 8-20-85	
CUSTOMER APPROVAL	CONTRACT NUMBER XC-0030 / DRAWING NUMBER FIGURE 3.6-18

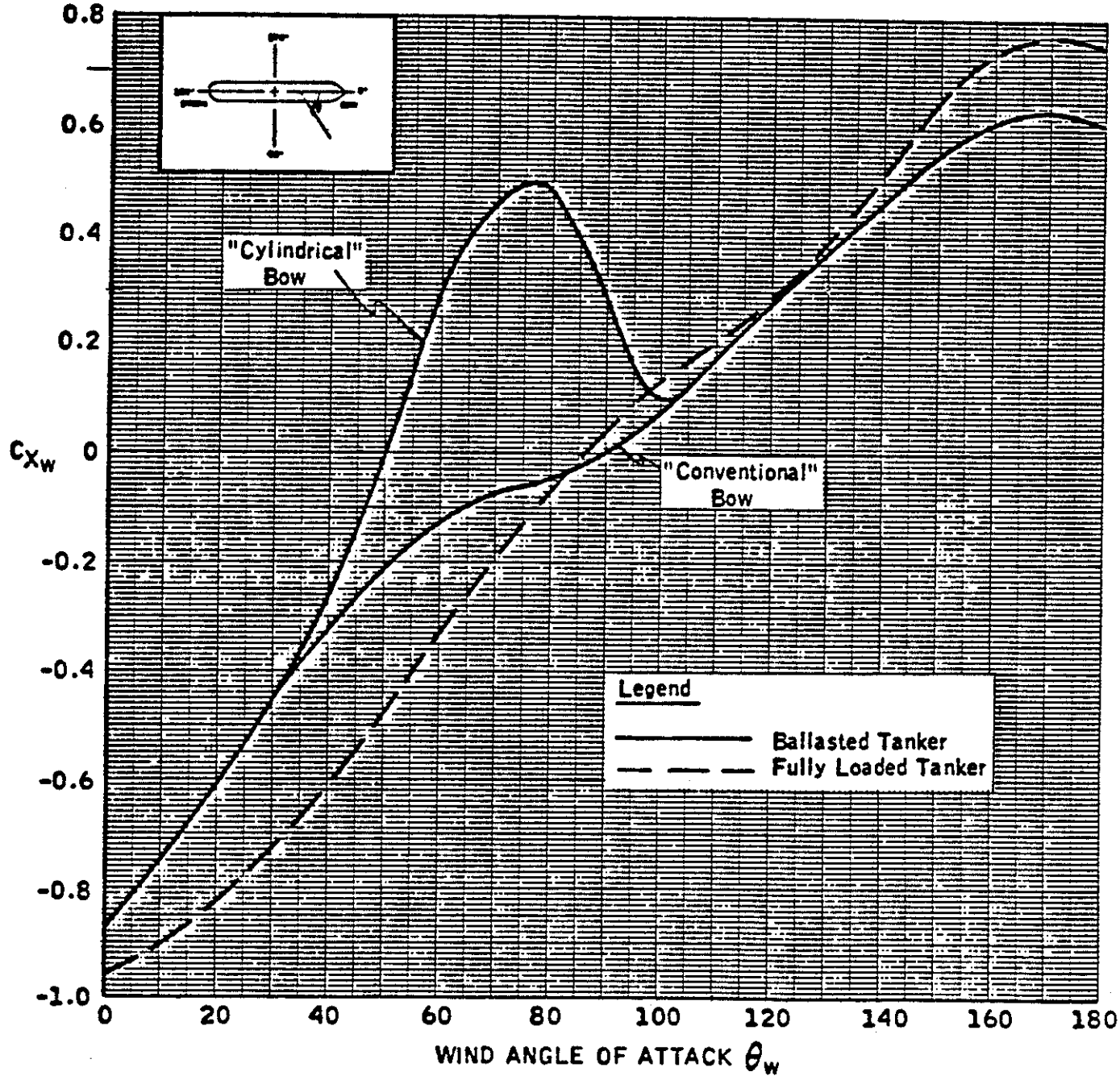

U.S. DEPARTMENT OF THE INTERIOR MINERALS MANAGEMENT SERVICE	SCALE: NONE	TITLE OF DRAWING:	
	DRAWN BY: A. FOX DATE 8-5-85	LONGITUDINAL WIND FORCE COEFFICIENT C_{X_W}	
Brown & Root Development, Inc. HOUSTON, TEXAS	CHECKED BY: DATE 8/19/85		
	APPROVED: DATE 8-20-85		
	CUSTOMER APPROVAL	CONTRACT NUMBER XC-0030	DRAWING NUMBER FIGURE 3.6-19

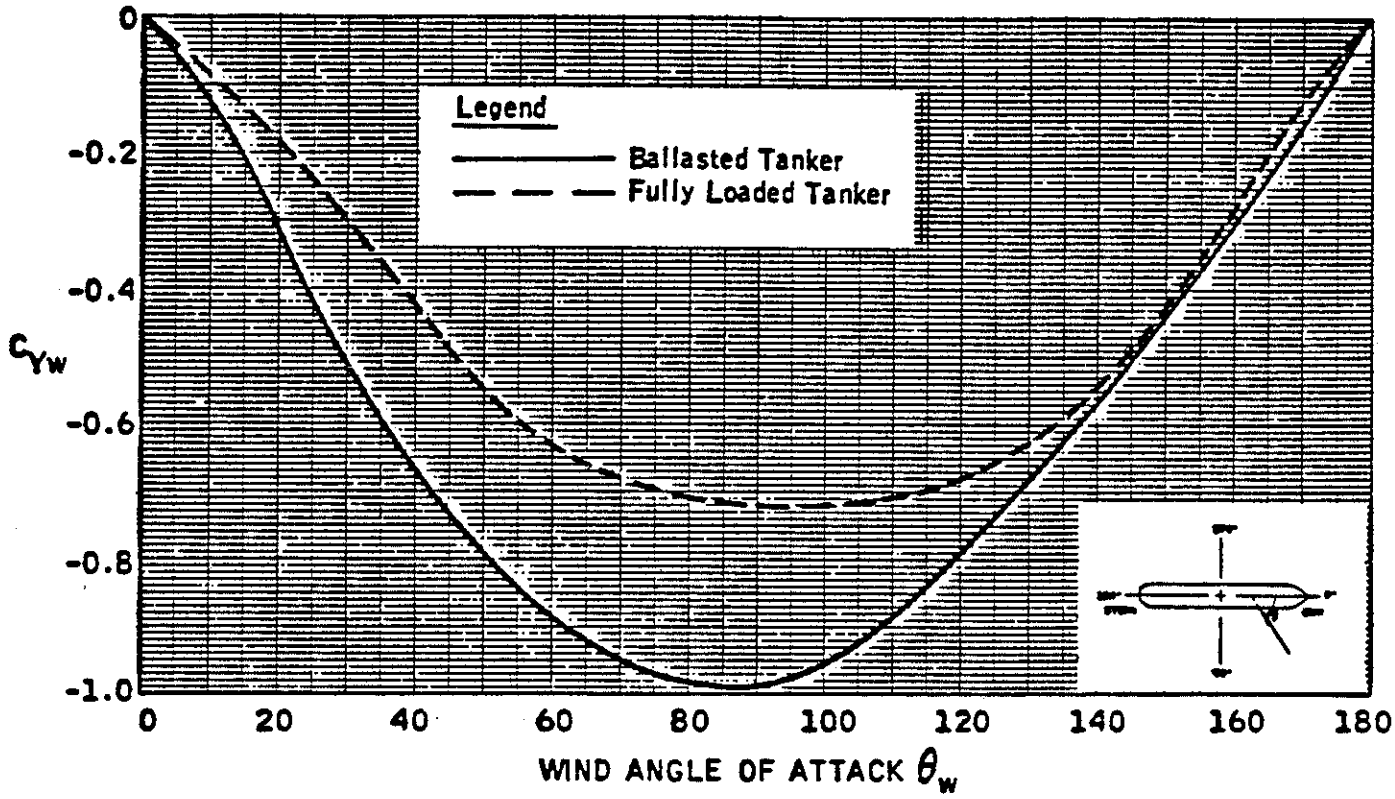

U.S. DEPARTMENT OF THE INTERIOR MINERALS MANAGEMENT SERVICE	SCALE: NONE	TITLE OF DRAWING:	
	DRAWN BY: A.FOX DATE 8-6-85	LATERAL WIND FORCE COEFFICIENT	
Brown & Root Development, Inc. HOUSTON, TEXAS	CHECKED BY: DATE 8/19/85	C_{Yw}	
	APPROVED: EEF DATE 8-20-85		
	CUSTOMER APPROVAL	CONTRACT NUMBER XC-0030	DRAWING NUMBER FIGURE 3.6-20

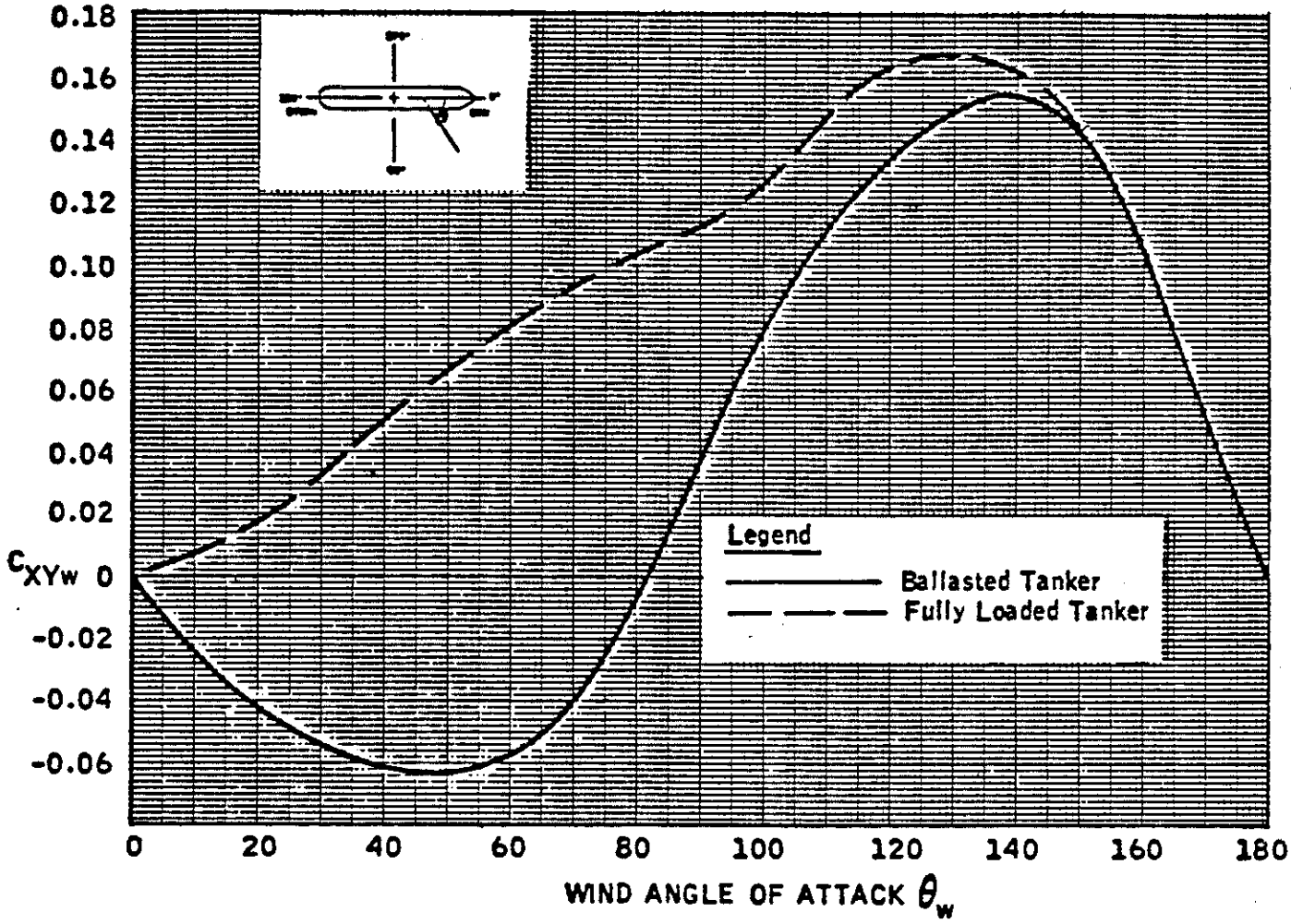

U.S. DEPARTMENT OF THE INTERIOR MINERALS MANAGEMENT SERVICE	SCALE: NONE	TITLE OF DRAWING:
	DRAWN BY: A.FOX DATE 8-6-85	WIND YAW MOMENT COEFFICIENT
Brown & Root Development, Inc. HOUSTON, TEXAS	CHECKED BY: DATE 8/19/85	C_{XYw}
	APPROVED: DATE 8-20-85	
	CUSTOMER APPROVAL	CONTRACT NUMBER XC-0030 / DRAWING NUMBER FIGURE 3.6-21

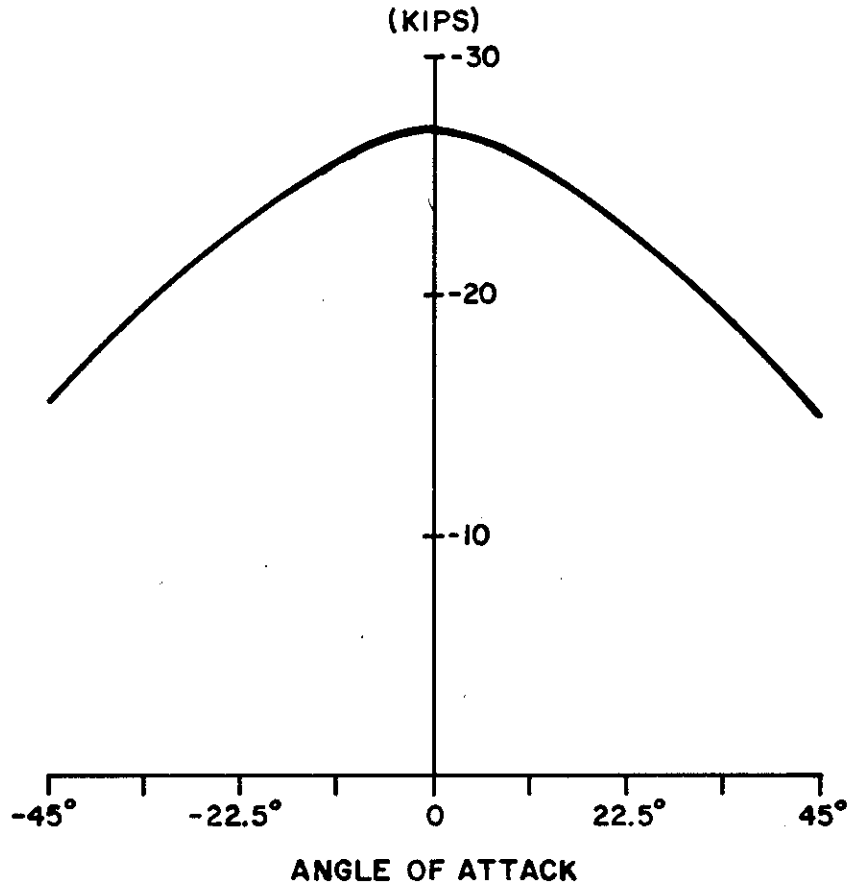

U.S. DEPARTMENT OF THE INTERIOR
MINERALS MANAGEMENT SERVICE

Brown & Root Development, Inc.
HOUSTON, TEXAS

SCALE: NONE	TITLE OF DRAWING: WIND FORCE IN LONGITUDINAL DIRECTION vs. ANGLE OF ATTACK AT B-9
DRAWN BY: R.VYBIRAL DATE 7-30-85	
CHECKED BY: DATE 8/19/85	
APPROVED: DATE 8-20-85	
CUSTOMER APPROVAL	CONTRACT NUMBER XC-0030 / DRAWING NUMBER FIGURE 3.6-22

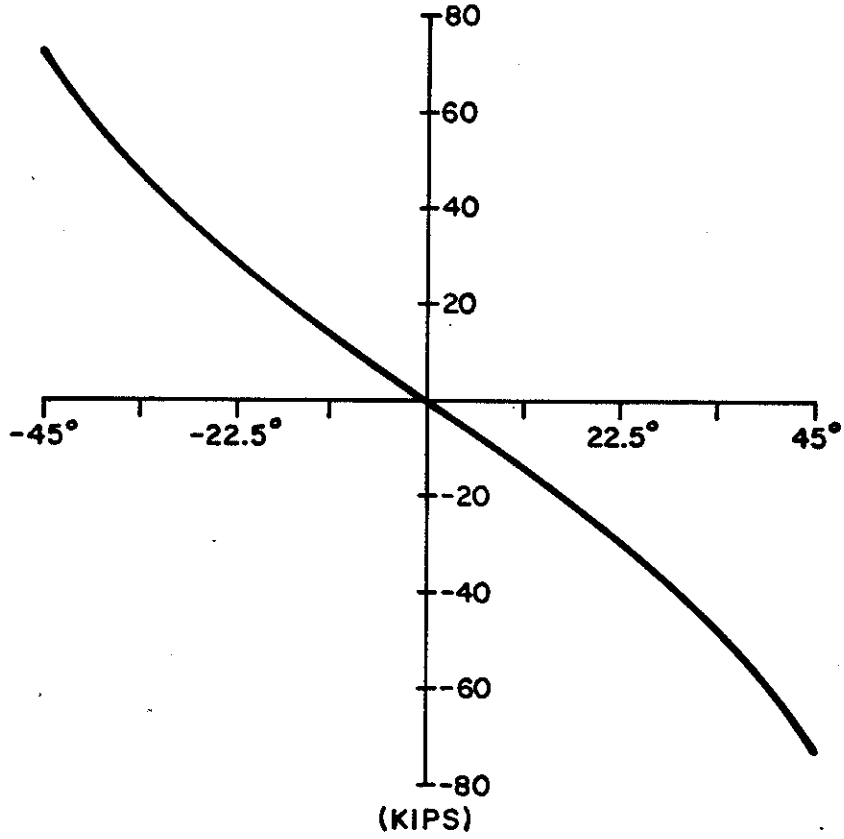

U.S. DEPARTMENT OF THE INTERIOR
MINERALS MANAGEMENT SERVICE

Brown & Root Development, Inc.
HOUSTON, TEXAS

SCALE: NONE	TITLE OF DRAWING: WIND FORCE IN LATERAL DIRECTION vs. ANGLE OF ATTACK AT B-9
DRAWN BY: R.VYBIRAL DATE 7-30-85	
CHECKED BY: DATE 8/19/85	
APPROVED: EE8 DATE 8-20-85	
CUSTOMER APPROVAL	CONTRACT NUMBER XC-0030 / DRAWING NUMBER FIGURE 3.6-23

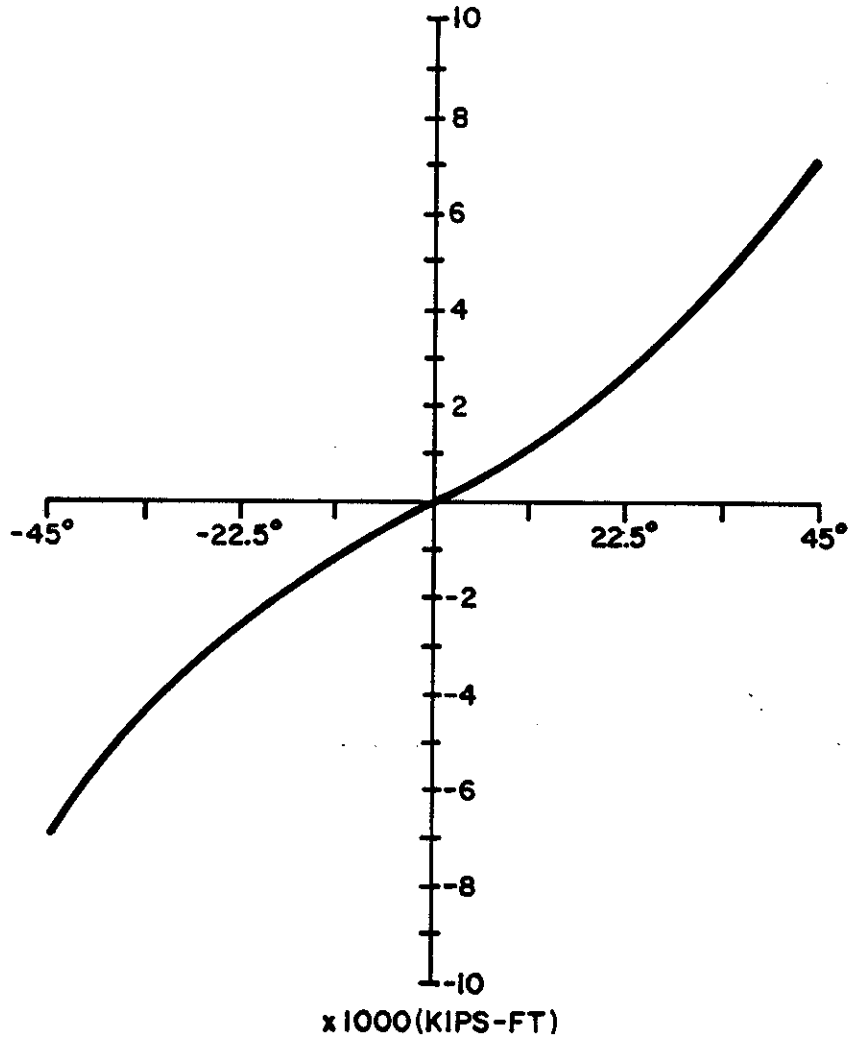

U.S. DEPARTMENT OF THE INTERIOR
MINERALS MANAGEMENT SERVICE

Brown & Root Development, Inc.
HOUSTON, TEXAS

SCALE: NONE	TITLE OF DRAWING: WIND MOMENT vs. ANGLE OF ATTACK AT B-9
DRAWN BY: R.VYBIRAL DATE 7-30-85	
CHECKED BY: DATE 8/19/85	
APPROVED: DATE 8-20-85	
CUSTOMER APPROVAL	CONTRACT NUMBER XC-0030 / DRAWING NUMBER FIGURE 3.6-24

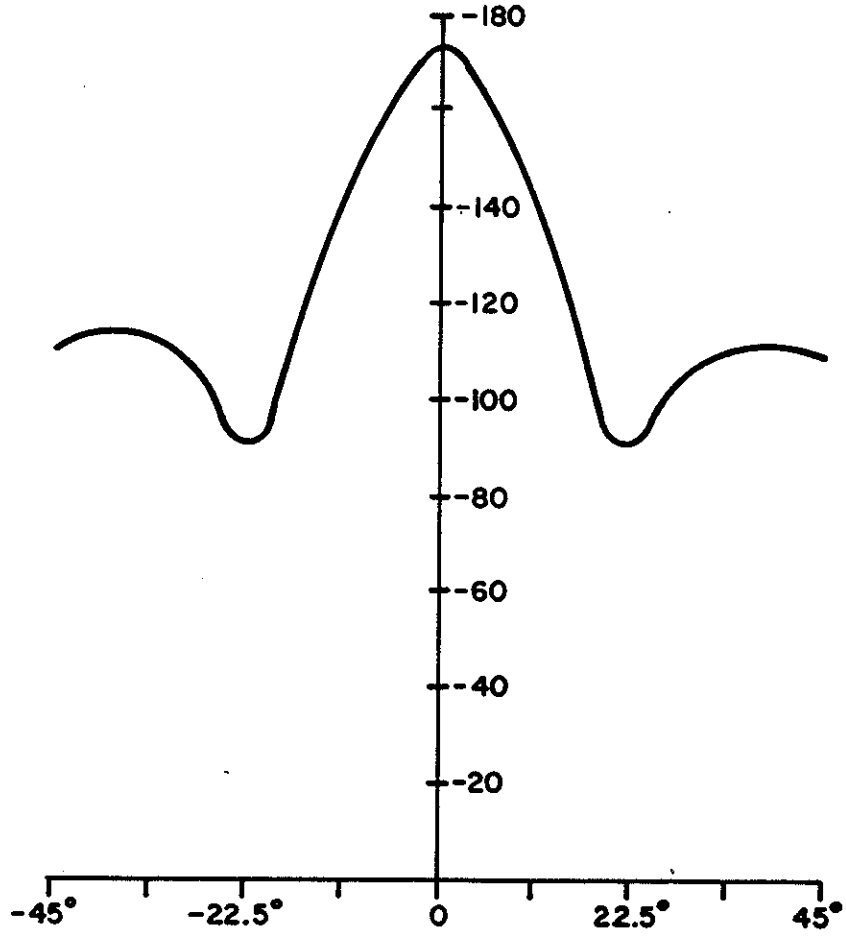

U.S. DEPARTMENT OF THE INTERIOR
MINERALS MANAGEMENT SERVICE

Brown & Root Development, Inc.
HOUSTON, TEXAS

SCALE: NONE	TITLE OF DRAWING:
DRAWN BY: R.VYBIRAL DATE 7-30-85	TOTAL ENVIRONMENTAL LOADS
CHECKED BY: DATE 8/19/85	IN LONGITUDINAL DIRECTION
APPROVED: EEP DATE 8-20-85	AT B-9
CUSTOMER APPROVAL	CONTRACT NUMBER XC-0030 / DRAWING NUMBER FIGURE 3.6-25

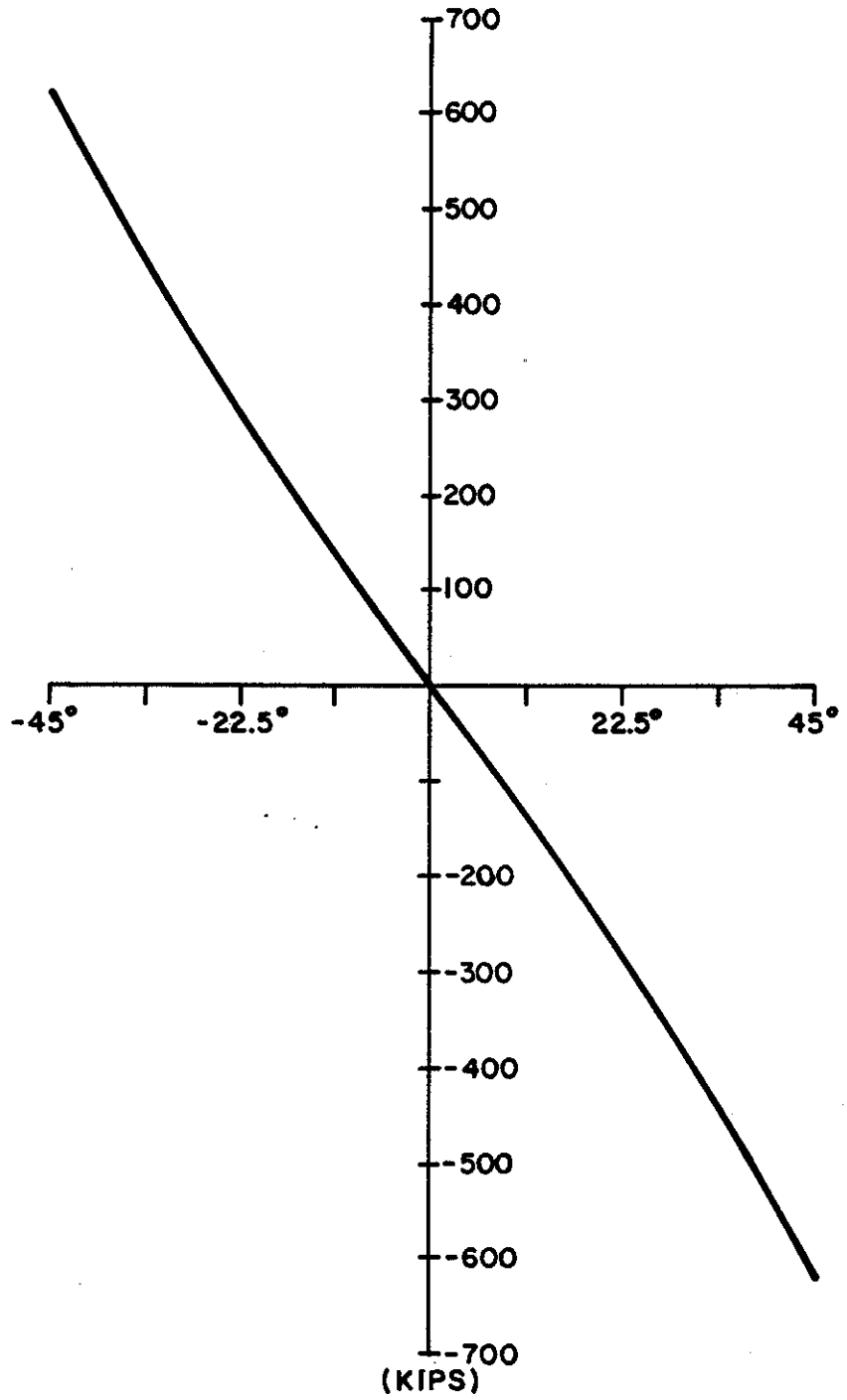

U.S. DEPARTMENT OF THE INTERIOR
MINERALS MANAGEMENT SERVICE

Brown & Root Development, Inc.
HOUSTON, TEXAS

SCALE: NONE	TITLE OF DRAWING:
DRAWN BY: R.VYBIRAL DATE 7-30-85	TOTAL ENVIRONMENTAL LOADS
CHECKED BY: DATE 8/19/85	IN LATERAL DIRECTION AT B-9
APPROVED: DATE 8-20-85	
CUSTOMER APPROVAL	CONTRACT NUMBER XC-0030 / DRAWING NUMBER FIGURE 3.6-26

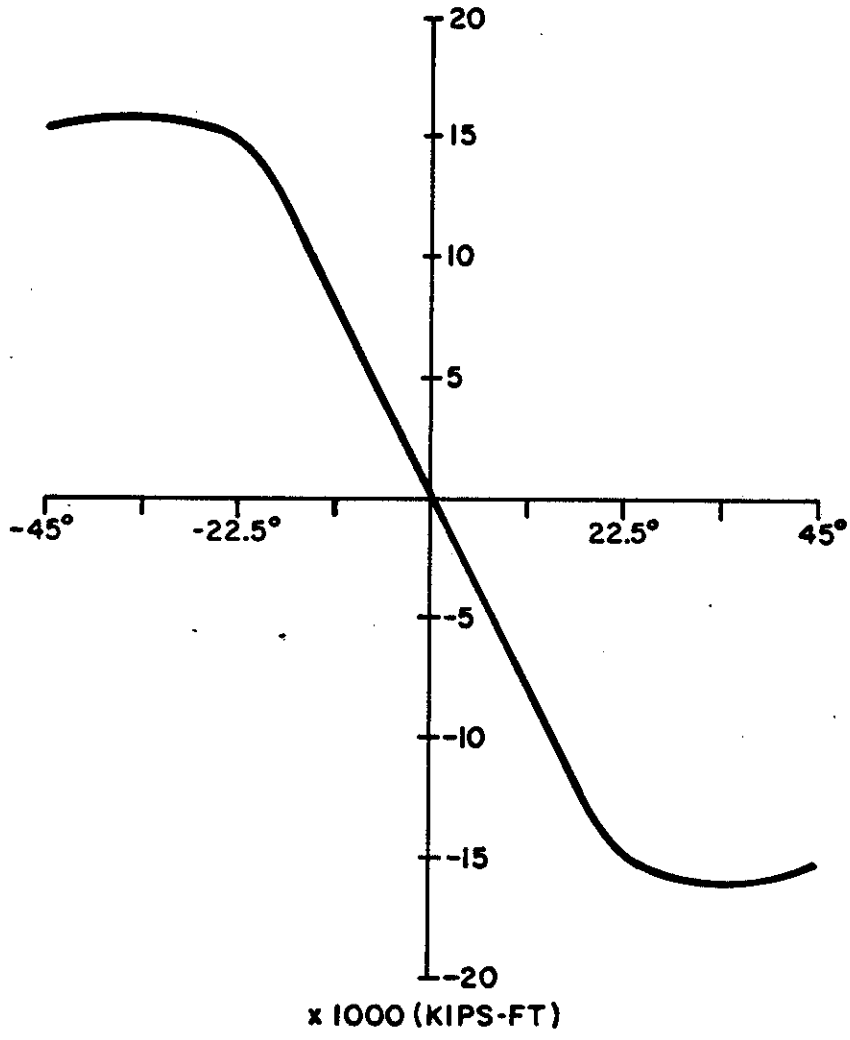

U.S. DEPARTMENT OF THE INTERIOR
MINERALS MANAGEMENT SERVICE

Brown & Root Development, Inc.
HOUSTON, TEXAS

SCALE: NONE	TITLE OF DRAWING: TOTAL ENVIRONMENTAL YAW MOMENT AT B-9
DRAWN BY: R.VYBIRAL DATE 7-30-85	
CHECKED BY: DATE 8/19/85	
APPROVED: DATE 8-20-85	
CUSTOMER APPROVAL	CONTRACT NUMBER XC-0030 / DRAWING NUMBER FIGURE 3.6-27

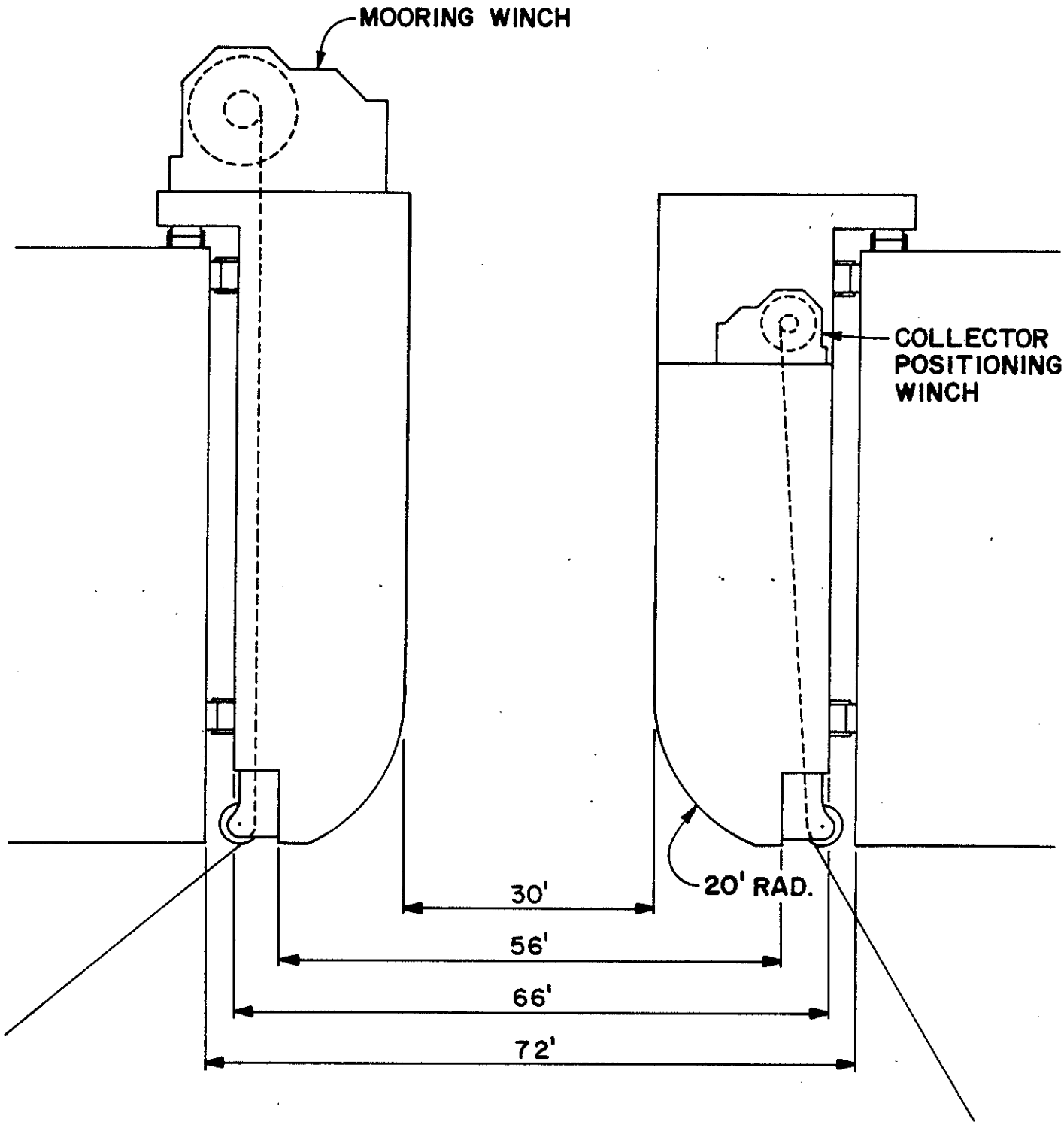

U.S. DEPARTMENT OF THE INTERIOR
MINERALS MANAGEMENT SERVICE

Brown & Root Development, Inc.
HOUSTON, TEXAS

SCALE: 1/16" = 1'-0"	TITLE OF DRAWING: THE TURRET ARRANGEMENT
DRAWN BY: JKR DATE 7-25-85	
CHECKED BY: DATE 8/19/85	
APPROVED: DATE 8-20-85	
CUSTOMER APPROVAL	CONTRACT NUMBER XC-0030 / DRAWING NUMBER FIGURE 3.6-28

TABLE 3.6-29
ANCHOR CONSIDERATIONS

ANCHOR TYPE	COMMENTS
UNMODIFIED STOCKLESS	Not recommended; very unstable Low holding power
MODIFIED STOCKLESS	Used by many construction barges and pipelay vessels with modifications to crown and flukes. Performance adequate for this application; holding power probably similar to LWT/Danforth
LWT/DANFORTH	Used by several drilling contractors. Reported as good, all-round anchor with reasonable holding power. Will become tangled with pendants. Flukes will not readily trip. Can be supplied with 2 position fluke angles.
MOOR FAST	Used by some drilling contractors. Shows an improved performance over LWT type. Can be supplied with 2 position fluke angles.
DELTA FLIPPER	Good penetration and stability coupled with high holding power. Flukes trip easily. Difficult to break out.
BRUCE TWINSHANK (T.S.)	Very good penetration and stability coupled with high holding power. Fluke angle can be changed to suit bottom conditions. Only fixed fluke type difficult to handle, especially on work boat deck.
STEVFIX	Very high holding power, good penetration and stability. Fluke angle can be changed to suit bottom conditions. Some fluke tripping problems encountered with U.S. Navy tests.

Turret location is determined by factors such as the structural configuration of the tanker, distance from the quarters, effects on mooring line loadings, etc. To a certain extent, this system could benefit from a large separation distance so that the quarters area is removed as far as possible from the fire/hazard area. With turret moored tankers, the turret transmits mooring forces to the hull without a turning moment. Since the centerline of environmental loadings lies behind midships, the tanker will normally weathervane and head into the wind. Designing for a condition where the predominant wind direction lies 20° to 45° off the bow, the mooring system has been designed the mooring system to react against the environmental forces, and the thruster assist system to counteract the associated environmental turning moment.

3.6.3.4 Thruster System Description:

Figure 3.6-30 shows the general location of the thruster units relative to the tanker midships. Four, 4000 h.p. retractable, azimuthing, thruster units will be needed. These units are recommended to be of the constant speed variable pitch propeller type driven by a synchronous electric motor with hydraulic controls for varying blade pitch, and controlling the azimuth rotation. Blade diameters of 2.8 meters (9.2 ft) will be typical.

Typical thruster characteristics are available from several manufacturers' technical documents. For the purposes of this report, thrusters with the following data have been used. This data is typical for 2.8m diameter Kort-Nozzle thrusters available from Schottel Technical Data Sheet, (BV, Saturnsstraat 89, The Hague, Netherlands) and operated at a nominal 2.9 MW power level.

Description of Thrusters:

Number:	4
Locations:	As indicated in Figure 3.6-30
Power Rating:	3887 HP (2.9 Megawatt)
Type:	Fixed Speed, Variable Pitch

Diameter:	2.8m (9.2 ft)
Open Water Bollard Pull Thrust:	109 Kips
Thrust Reduction Factor with Inlet Velocity:	See Figure 3.6-31*
Thrust-Speed-Power Curves:	See Figure 3.6-32 and 33*

*These Figures show typical characteristics only.

For fixed pitch propellers, the thrust varies with shaft power according to the following relationship.

$$T = T_o \cdot (P/P_o)^{2/3}$$

where T_o is the bollard pull open water thrust with no nominal inlet current speed, and P and P_o are the shaft power for the thrust, T, and the rated shaft power for the thrust T_o. As P and T increase both the drive torque and speed increase. Discussion of these interrelations for ducted propellers is provided in the Schottel Technical Data Sheet.

The net thrust is reduced by hull interaction losses and by inlet flow speed losses. While interaction loss factors depend on azimuth angle and seem to vary between .6 and .9, a constant loss factor of 0.8 has been selected here for all units, being a compromise between simplicity in simulation and practicality.

A loss factor due to inlet currents of 2.5 knots is estimated at 0.88. The relationship used is

$$T = (0.8)(0.88)\ (109)\ (P/3887)^{2/3} \text{ kips}$$

or $$P = 3887(T/76.8)^{3/2} \text{ hp}$$

The maximum rated effective thrust for each unit is 76.8 kips at which the shaft power will be 3900 hp. These relationships correspond to a nominal rated thrust of 28 lb/hp and reduced to 19.8 lb/hp due to losses.

The thrust-power relationship indicates one point. The incremental thrust per incremental horsepower is high at low thrust and lower at high thrust. This means that the units become less effective at high usage factors (T/T_0) and it is therefore more effective to operate several units at low levels than few units at higher levels.

Thruster locations have been chosen as the best compromise between individual separation to eliminate interactions, ability to minimize anchor line loading, ability to provide the required moment and heading control, and practical considerations for installation and connection away from the operational hazards from the fire and the froth in the boil area of the blowout.

3.6.3.5 Vessel Excursions and Line Tensions

Several factors influence the design of a mooring system including water depth, weather conditions, vessel response to wind, current and waves, mooring line tension response and anchor holding capacity. For this study, water depths ranging from 200 to 1000 ft were considered. Weather conditions for operating and abandonment limits were as given in Table 3.6-1.

For weather lying between the maximum operating and the abandonment criteria, it is assumed that the vessel will be in a standby mode where the collector has been pulled off the wellhead but where the vessel remains moored. It follows that the design of the mooring and positioning systems is based on the 16 ft. significant waves and Beaufort 9 wind values.

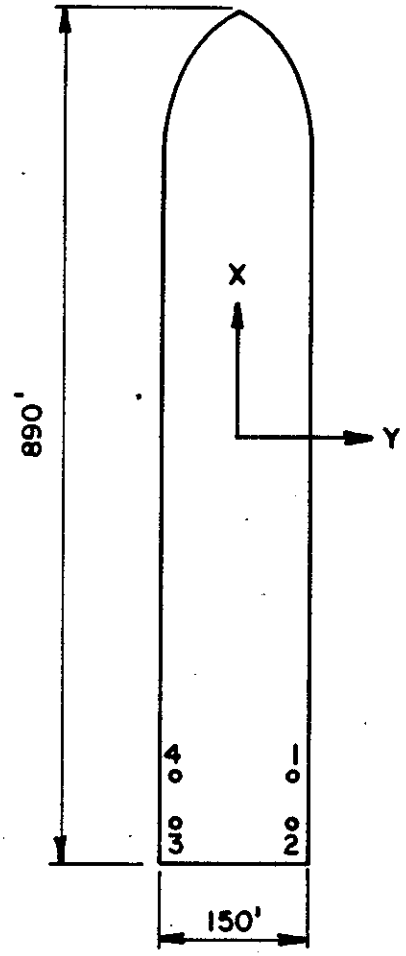

THRUSTER NO.	X (FT.)	Y (FT.)
1	-350	70
2	-400	70
3	-400	-70
4	-350	-70

U.S. DEPARTMENT OF THE INTERIOR
MINERALS MANAGEMENT SERVICE

Brown & Root Development, Inc.
HOUSTON, TEXAS

SCALE: NONE

DRAWN BY: R.VYBIRAL DATE 7-30-85

CHECKED BY: DATE 8/19/85

APPROVED: DATE 8-20-85

CUSTOMER APPROVAL

TITLE OF DRAWING: THRUSTER SYSTEM LOCATION

CONTRACT NUMBER XC-0030

DRAWING NUMBER FIGURE 3.6-30

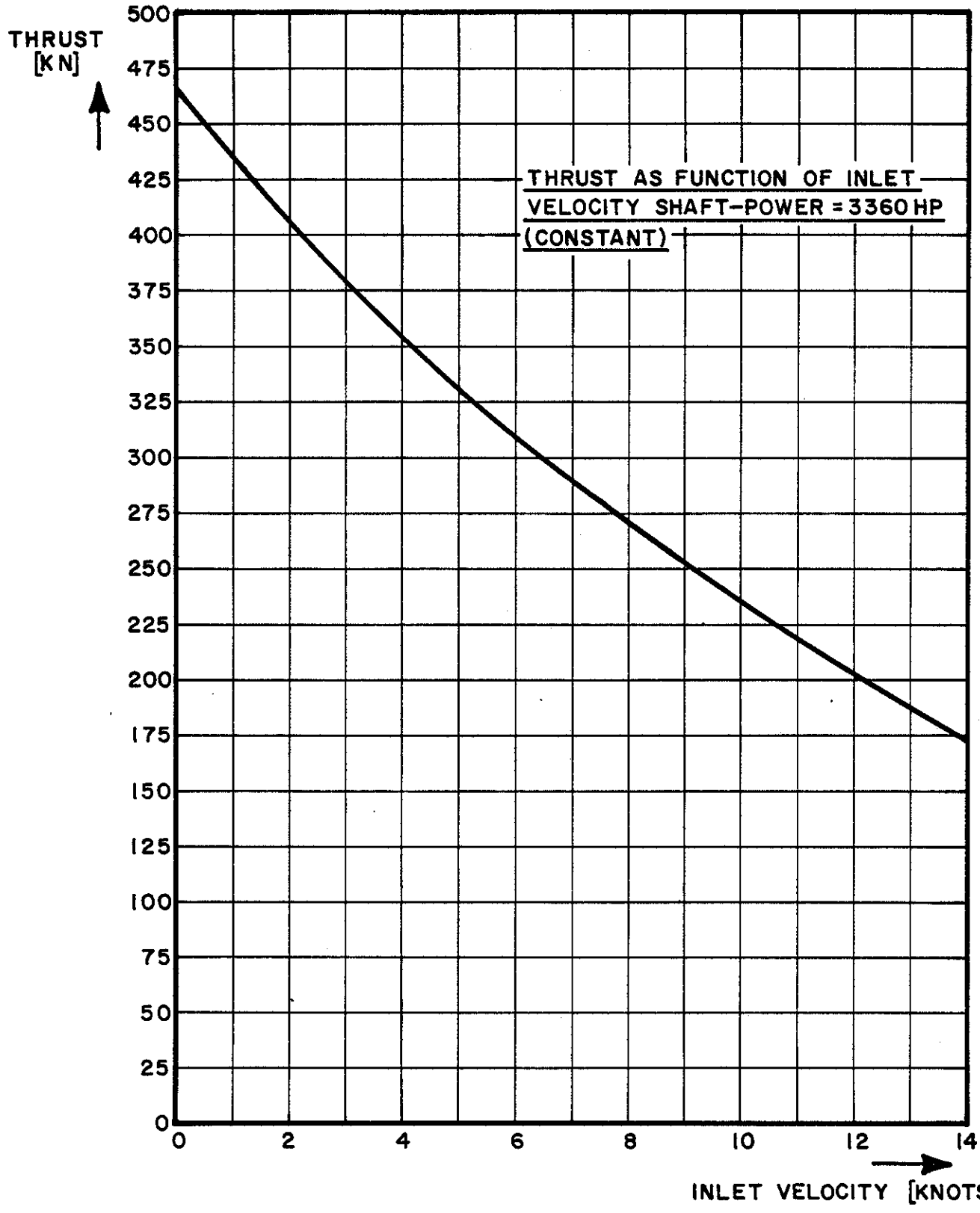

U.S. DEPARTMENT OF THE INTERIOR
MINERALS MANAGEMENT SERVICE

Brown & Root Development, Inc.
HOUSTON, TEXAS

SCALE: NONE	TITLE OF DRAWING: THRUST VS. INLET VELOCITY
DRAWN BY: A. FOX DATE 8-6-85	
CHECKED BY: DATE 8/19/85	
APPROVED: EEP DATE 8-20-85	
CUSTOMER APPROVAL	CONTRACT NUMBER XC-0030 / DRAWING NUMBER FIGURE 3.6-31

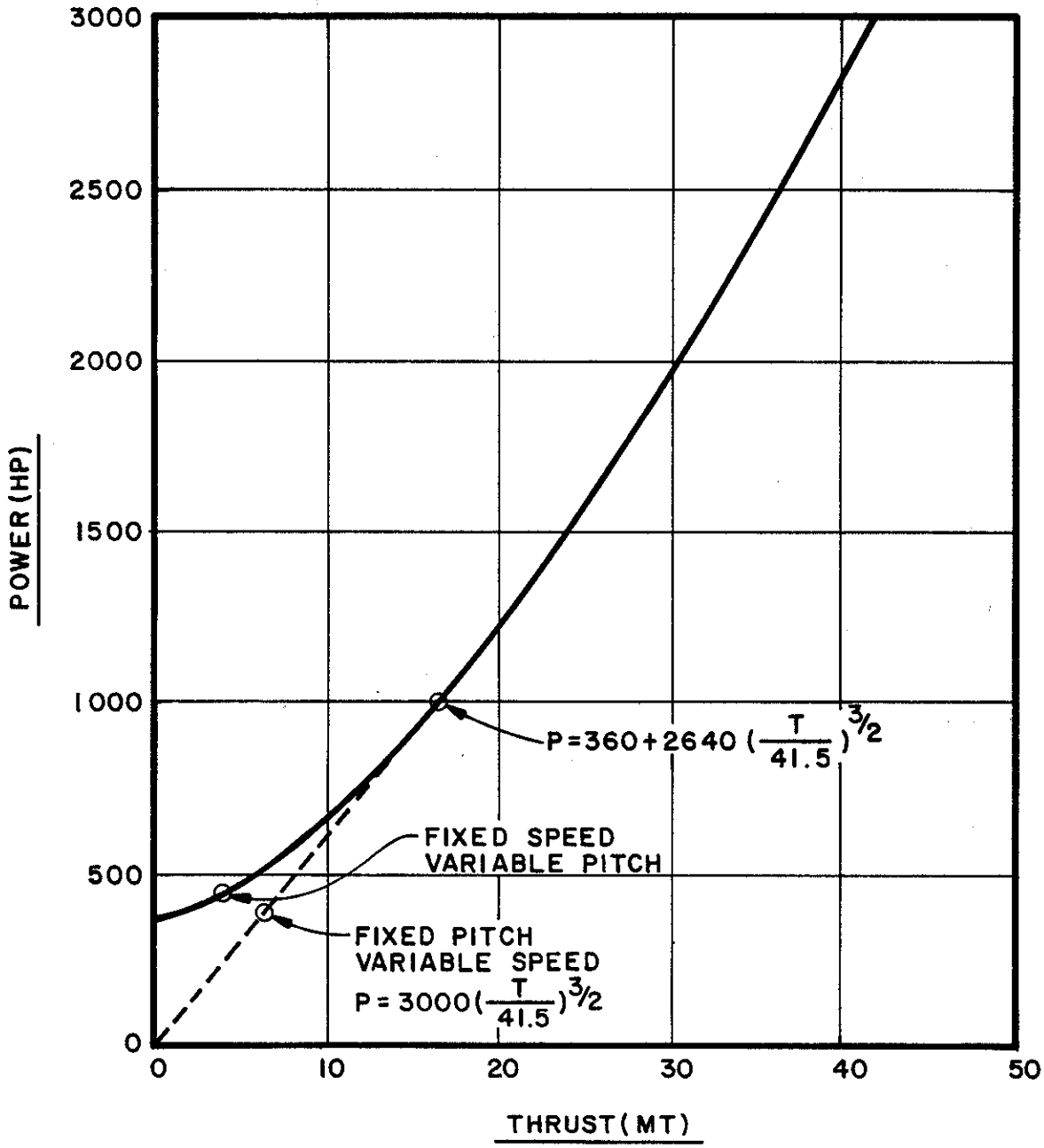

U.S. DEPARTMENT OF THE INTERIOR
MINERALS MANAGEMENT SERVICE

Brown & Root Development, Inc.
HOUSTON, TEXAS

SCALE: NONE	TITLE OF DRAWING: POWER-THRUST CURVE FOR 3000HP UNITS - BOLLARD PULL - MAX THRUST, 41.5 METRIC TONNES
DRAWN BY: A.FOX DATE: 8-5-85	
CHECKED BY: DATE: 8/19/85	
APPROVED: DATE: 8-20-85	
CUSTOMER APPROVAL	CONTRACT NUMBER: XC-0030
	DRAWING NUMBER: FIGURE 3.6-33

For these conditions, an in-house computer program APCS (Automatic Positioning Control Simulation) was used to simulate stationkeeping performance in the presence of coincident wind, wave, and current loads coming from the bow quarter. Wind gustiness, and slowly varying wave drift effects were included.

The results of a few, but sufficient number of runs gave simulated vessel motions, line tensions, and thruster force levels in terms of data for a 2000 seconds simulation time.

Statistical measures for the data were established in terms of average, standard deviations, and peak values.

The results indicate that:

1) In the 1,000 ft. water depth, the moonpool excursions at maximum standby conditions lie within a 72 feet diameter circle 90 percent of the time and within a 24 feet diameter circle 62 percent of the time. The riser is expected to follow these excursions without structural damage.
2) The system of four 2.9 MW thruster units will be sufficient to maintain heading and station when combined with the recommended turret mooring system. The dynamic positioning system will assist in reducing the mooring line tensions.
3) Mooring line tensions and vessel excursions are shown as time history diagrams in Figure 3.6-34 to 36. The most heavily loaded mooring line under the above weather conditions will carry an average of 375 kips, peaking to 520 kips. The peak level is slightly above 0.5 of the catalog breaking strength of the recommended 3-inch diameter wire rope but should still be acceptable. These tensions could be even lower if the DP system tuning were optimized.

4) Statistical results indicate that for a tanker of this general size and capacity, the wave drift forces are the largest active load component. In large beam seas, the vessel motions in heave and roll will be extremely uncomfortable and severe waves should be taken on the bow to bow quarter if motions are to be minimized.

5) Failure of the DP system in bad weather could cause wind to blow from bow to stern as heading control is lost. While this would be hazardous when toxic gases from the blown well are present, no catastrophic positioning problems are foreseen as the tanker would merely weathervane about its turret.

3.6.4 Operating Steps and Procedures

3.6.4.1 The Scope

In this section all major operating steps and procedures are defined an outlined. The system operability and environmental effects are also addressed. The anticipated hazards and necessary precautions are pointed out where possible. The basic items reviewed are:

1. Deployment
2. Abandonment
3. Redeployment
4. Well location
5. Debris removal
6. Fire entering
7. Mooring and station-keeping
8. Shipboard operations
9. Safety measures
10. Maintenance
11. Contingencies
12. Special considerations

It may be recalled that the operational aspects of a subsurface collection system have remained unanswered. Most of the studies and developmental efforts in the prior years were confined to principles and concepts. The lack of confidence in being able to deploy and

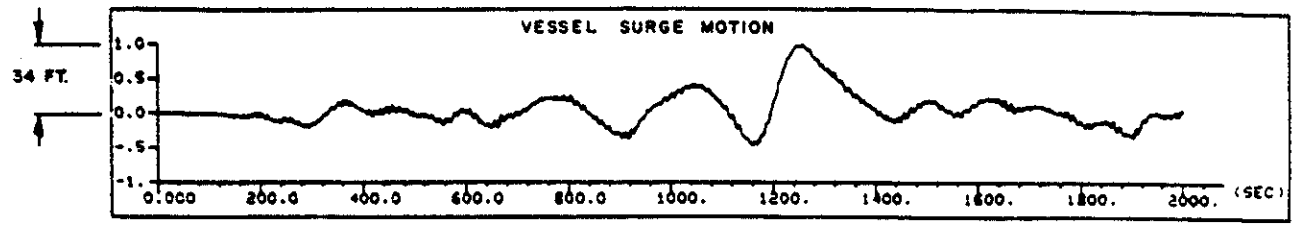
VESSEL SURGE MOTION
34 FT.
1.0
0.5
0.0
-.5
-1.
0.000
200.0
400.0
600.0
800.0
1000.
1200.
1400.
1600.
1800.
2000.
(SEC)

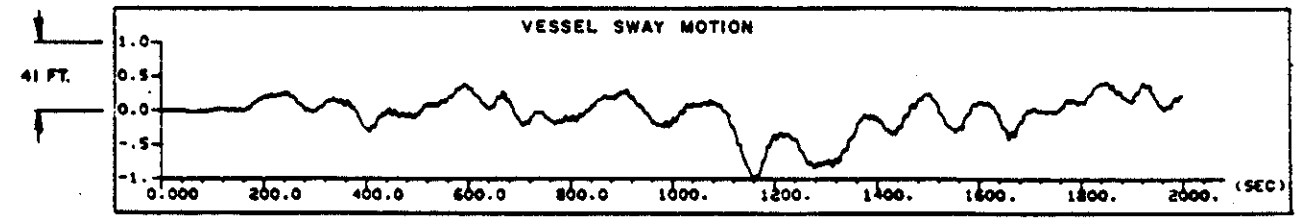
VESSEL SWAY MOTION
41 FT.
1.0
0.5
0.0
-.5
-1.
0.000
200.0
400.0
600.0
800.0
1000.
1200.
1400.
1600.
1800.
2000.
(SEC)

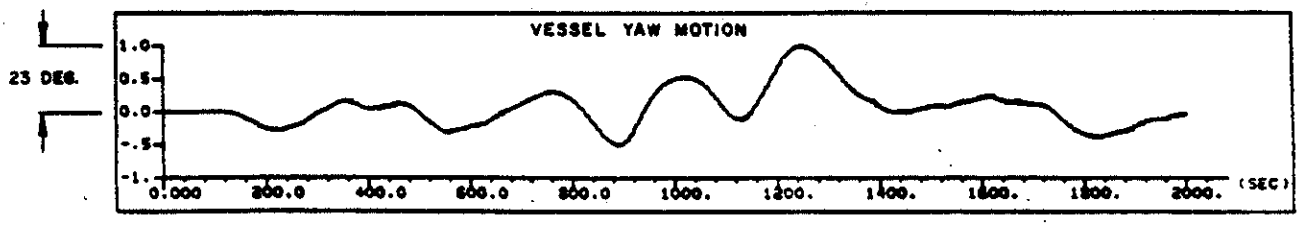
VESSEL YAW MOTION
23 DEG.
1.0
0.5
0.0
-.5
-1.
0.000
200.0
400.0
600.0
800.0
1000.
1200.
1400.
1600.
1800.
2000.
(SEC)

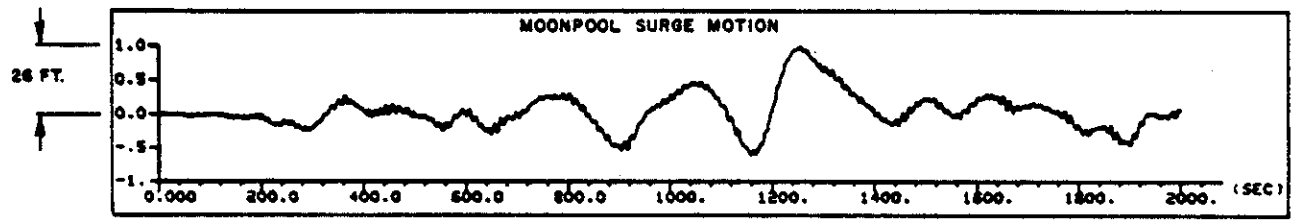
MOONPOOL SURGE MOTION
26 FT.
1.0
0.5
0.0
-.5
-1.
0.000
200.0
400.0
600.0
800.0
1000.
1200.
1400.
1600.
1800.
2000.
(SEC)

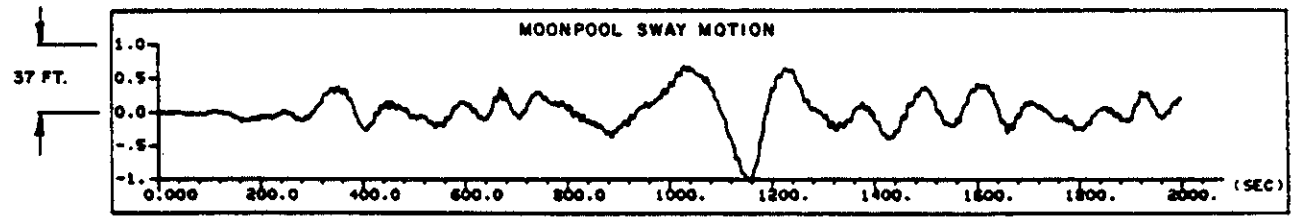
MOONPOOL SWAY MOTION
37 FT.
1.0
0.5
0.0
-.5
-1.
0.000
200.0
400.0
600.0
800.0
1000.
1200.
1400.
1600.
1800.
2000.
(SEC)

FIGURE 3.6-34

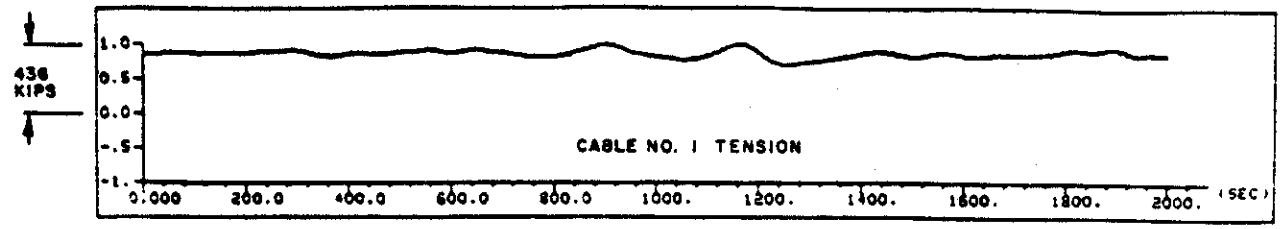
436
KIPS
1.0
0.5
0.0
-.5
-1.
CABLE NO. 1 TENSION
0.000
200.0
400.0
600.0
800.0
1000.
1200.
1400.
1600.
1800.
2000.
(SEC)

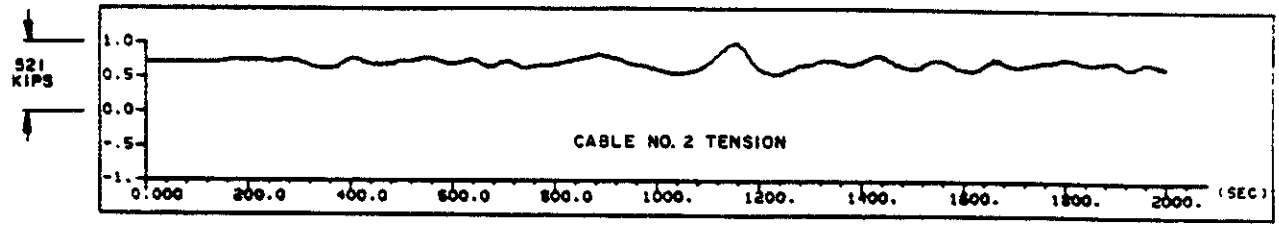
521
KIPS
1.0
0.5
0.0
-.5
-1.
CABLE NO. 2 TENSION
0.000
200.0
400.0
600.0
800.0
1000.
1200.
1400.
1600.
1800.
2000.
(SEC)

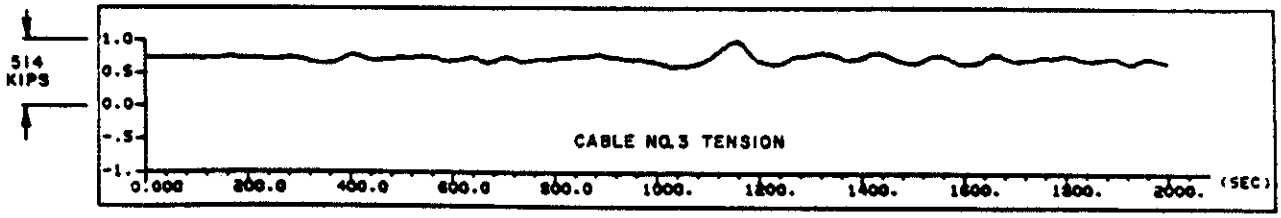
514
KIPS
1.0
0.5
0.0
-.5
-1.
CABLE NO.3 TENSION
0.000
200.0
400.0
600.0
800.0
1000.
1200.
1400.
1600.
1800.
2000.
(SEC)

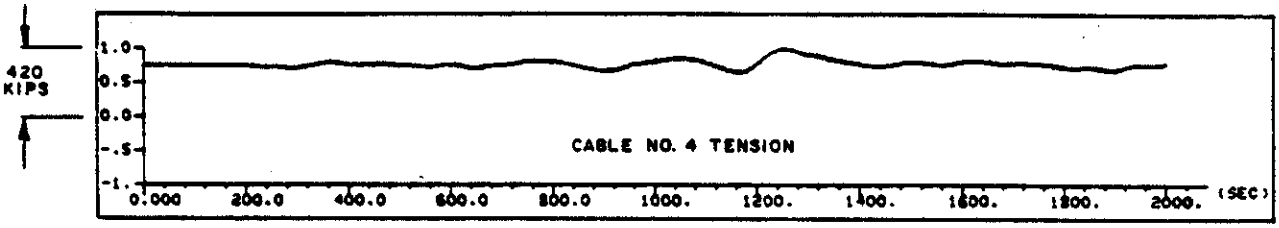
420
KIPS
1.0
0.5
0.0
-.5
-1.
CABLE NO. 4 TENSION
0.000
200.0
400.0
600.0
800.0
1000.
1200.
1400.
1600.
1800.
2000.
(SEC)

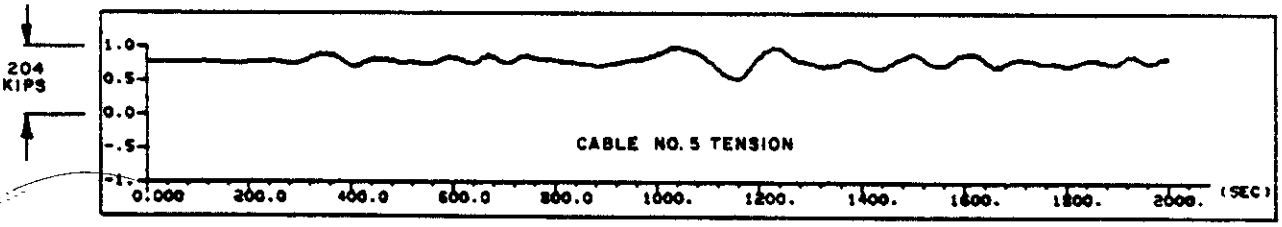
204
KIPS
1.0
0.5
0.0
-.5
-1.
CABLE NO. 5 TENSION
0.000
200.0
400.0
600.0
800.0
1000.
1200.
1400.
1600.
1800.
2000.
(SEC)

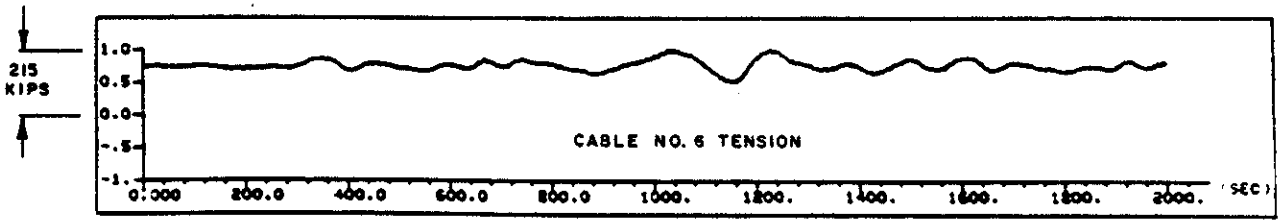
215
KIPS
1.0
0.5
0.0
-.5
-1.
CABLE NO. 6 TENSION
0.000
200.0
400.0
600.0
800.0
1000.
1200.
1400.
1600.
1800.
2000.
(SEC)

FIGURE 3.6-35

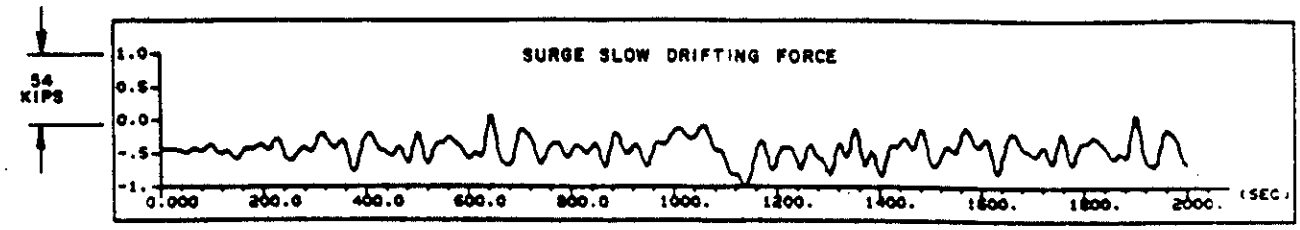
SURGE SLOW DRIFTING FORCE
54
KIPS
1.0
0.5
0.0
-.5
-1.
0.000
200.0
400.0
600.0
800.0
1000.
1200.
1400.
1600.
1800.
2000.
(SEC)

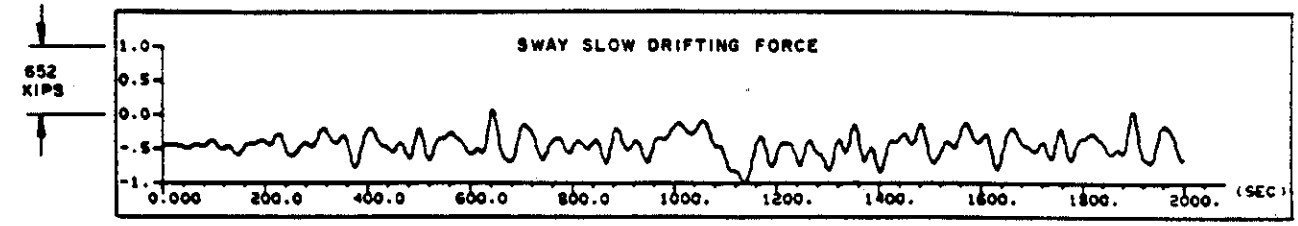
SWAY SLOW DRIFTING FORCE
652
KIPS
1.0
0.5
0.0
-.5
-1.
0.000
200.0
400.0
600.0
800.0
1000.
1200.
1400.
1600.
1800.
2000.
(SEC)

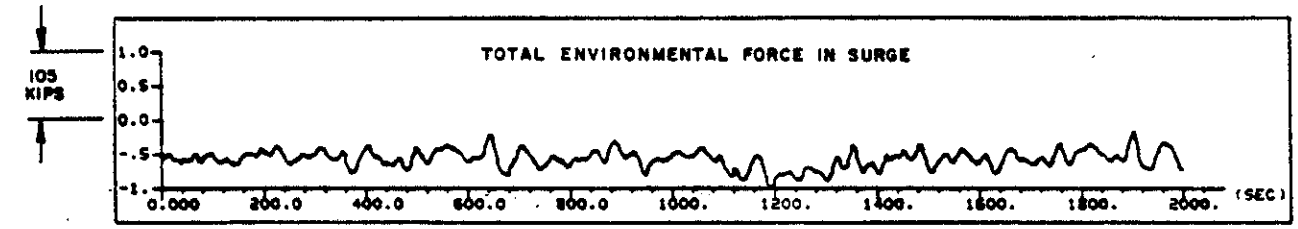
TOTAL ENVIRONMENTAL FORCE IN SURGE
105
KIPS
1.0
0.5
0.0
-.5
-1.
0.000
200.0
400.0
600.0
800.0
1000.
1200.
1400.
1600.
1800.
2000.
(SEC)

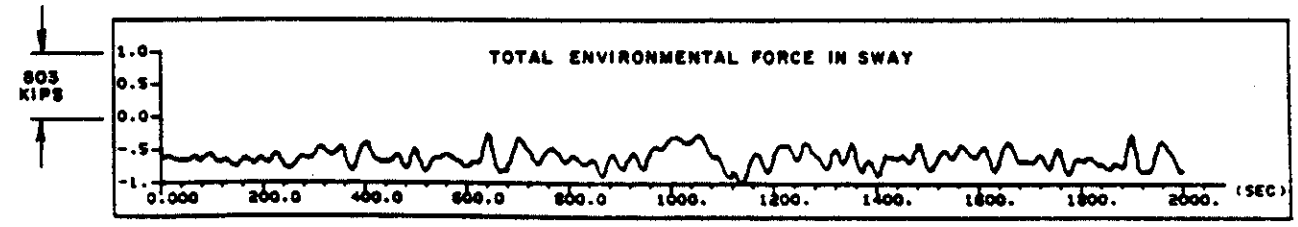
TOTAL ENVIRONMENTAL FORCE IN SWAY
803
KIPS
1.0
0.5
0.0
-.5
-1.
0.000
200.0
400.0
600.0
800.0
1000.
1200.
1400.
1600.
1800.
2000.
(SEC)

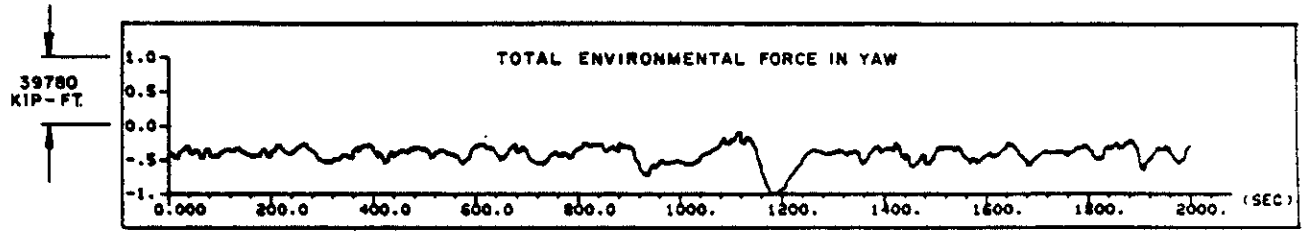
TOTAL ENVIRONMENTAL FORCE IN YAW
39780
KIP-FT.
1.0
0.5
0.0
-.5
-1.
0.000
200.0
400.0
600.0
800.0
1000.
1200.
1400.
1600.
1800.
2000.
(SEC)

FIGURE 3.6-36

install such a system has been one of the main reasons for other investigators or organizations to loose interest in it. It is perhaps very befitting to make a few general statements at this point:

1. Generally all offshore operations are delicate, complex, and cumbersome. Every undertaking is unique, and special methods and facilities are developed to complete each project successfully.
2. The Sombrero was the first known attempt to contain the history's biggest blowout. Coupled with the lack of preparedness, advance planning or the benefit of all the studies done in the aftermath, that attempt can be considered as much an operational success as it was daring. Notwithstanding, this unique attempt provided a very valuable experience base. When combined with the experiences from other extraordinary accomplishments, such as the installation of Cognac platform, Lena Guyed Tower, Hutton TLP, etc. the subsea blowout collection does not seem impossible.

It should be remembered that the plume from the wellhead and the fire on the surface are the primary contributing factors that make the collection operation difficult. It can be safely said that, save possibly the difficulties in coping with the plume and the surface fire, there is no other operational aspect for which proven technology may be lacking. The steps outlined below are based on these premises. It must be recognized that actual details of operations will be dictated by the case specifics.

3.6.4.2 The Blowout Scenario

In accordance with the stipulations in the contractual scope of work for this study, it is assumed that:

1. The blowout is from a single well, and it occurs during exploratory or development drilling. The BOP is on the wellhead and it may or may not be standing after the blowout.
2. The drilling vessel has moved off the location after the blowout.

3. The exact coordinates of the wellhead or the glory hole are known from the drilling log.
4. The re-entry system used during the drilling operation is either damaged after the blowout, or it is not usable due to the plume.
5. The blowing well is at a location accessible to the collection vessel.
6. Complete details of the blowout are available, including weather and the reservoir data.
7. The information is available as to what, if anything, from the drilling vessel has fallen over the well.
8. The ship-mounted collection system is ready to respond to the call. If it is being utilized for some other purpose at the moment, it should be easy to disengage it quickly.
9. The critical crew members trained for the blowout collection system operation are available on short call. They can not be assumed to be on standby status.
10. No capping operation or any other effort to stop the blowout would interfere with the deployment, installation and operation of the subsurface collection system, or vice versa.

3.6.5 Blowout Response Scenario

3.6.5.1 Mobilization

On receiving the blowout-response-call the mobilization and preparations begin. In a situation like this, time is of the essence. Therefore, the tanker and its onboard equipment should be in full readiness. In a hypothetical case the order of events will be as follows:

1. Obtain complete details about the blowout and the precise coordinates of the wellhead.
2. Get weather forecast for at least next seven days. If rough weather (approaching or exceeding the operational sea states specified in Table 3.6-1) is in the forecast, then the mobilization and other activities should be scheduled accordingly.

3. Mobilize a Multi-Service Vessel (MSV) equipped with survey equipment, diving/ROV spread, fire fighting, rescue facilities, hotel, and anchor handling gear. If such a vessel is not readily available, mobilize individual type vessels with the survey vessel being the first.
4. Establish reference transponders on nearby fixed structures or shore-based facilities for surface navigation and position fixing of the vessels. If such facilities are not available then Satellite Navigation System (SATNAV) or Global Positioning System (GPS) may be used.
5. While the survey vessel (or the MSV) is on its way to blowout site, mobilize the rest of the spread consisting of:
   a. the main tanker (see Section 3.2)
   b. two tugs, 7500 HP each
   c. a crew/supply boat
   d. a helicopter (if needed)
   e. a fire fighting vessel (if the MSV is not already mobilized)
   f. a shuttle tanker (to be mobilized last)
6. Gather all the crew and load up all necessary materials, supplies, and spares.
7. Based on the information available, have the lead crew members (foremen, captain, ship engineer, riggers and operators) work out a preliminary plan of attack with the technical team of the cognizant establishment.

3.6.5.2 Surveying and Positioning

With the survey vessel (or the MSV) at the blowout site, perform the following chores:

a. Survey the wellhead and its surrounding area. Obtain complete picture of the wellhead/BOP and the debris around it. Pass the data on to the tanker for preparation to deal with the situation;
b. Get a noise spectrum in the vicinity of the blowout, both in the horizontal and vertical planes;
c. Set-up a 4-transponder grid pattern around the wellhead, and calibrate it with the MSV, an ROV, or the survey vessel (see Fig. 3.6-45 and 47);

d. Having obtained the position fixes of the grid and the vessel, verify the coordinates of the wellhead;

e. Test the video equipment and the scanning sonar by taking pictures of the wellhead and the plume. Check for the attenuation of directed acoustic energy by the gaseous plume;

f. Prepare a sound velocity profile of the water for computing the distances underwater;

g. Get an estimate of the minimum distance from the fire zone that a vessel can be positioned at;

h. Note the directions of wind and current, and estimate the horizontal displacement of the fire zone from the wellhead for the initial positioning of the tanker;

i. Estimate the size of the fire zone and its meandering range;

j. Estimate the height of the wellhead/BOP or the point of the discharge above the seabed from the survey data;

k. Make any other observations and/or measurements (such as temperature, salinity, etc) as may be required.

3.6.5.3 Deployment and Installation

Having completed the survey and position fixing proceed with the deployment and installation as follows:

1. With the help of the MSV or the tugs attempt to clear major debris from the wellhead area as required. See Section 3.6.5.4 for details.

2. When the tanker arrives at the site, commence anchor deployment and tanker mooring operation as described in Section 3.6.2.1.

3. Prepare tanker against fire and gas hazards. Get all safety systems in working order.

4. With the deluge system, water curtains and fire monitors in operation (or push-button ready) winch the tanker as close to the wellhead as the surface fire would allow. If the direction of the current opposes the wind direction the fire zone may be displaced by 100 ft or more (in deeper waters), allowing the bow of the tanker to be positioned over the wellhead (Fig. 3.6-37).

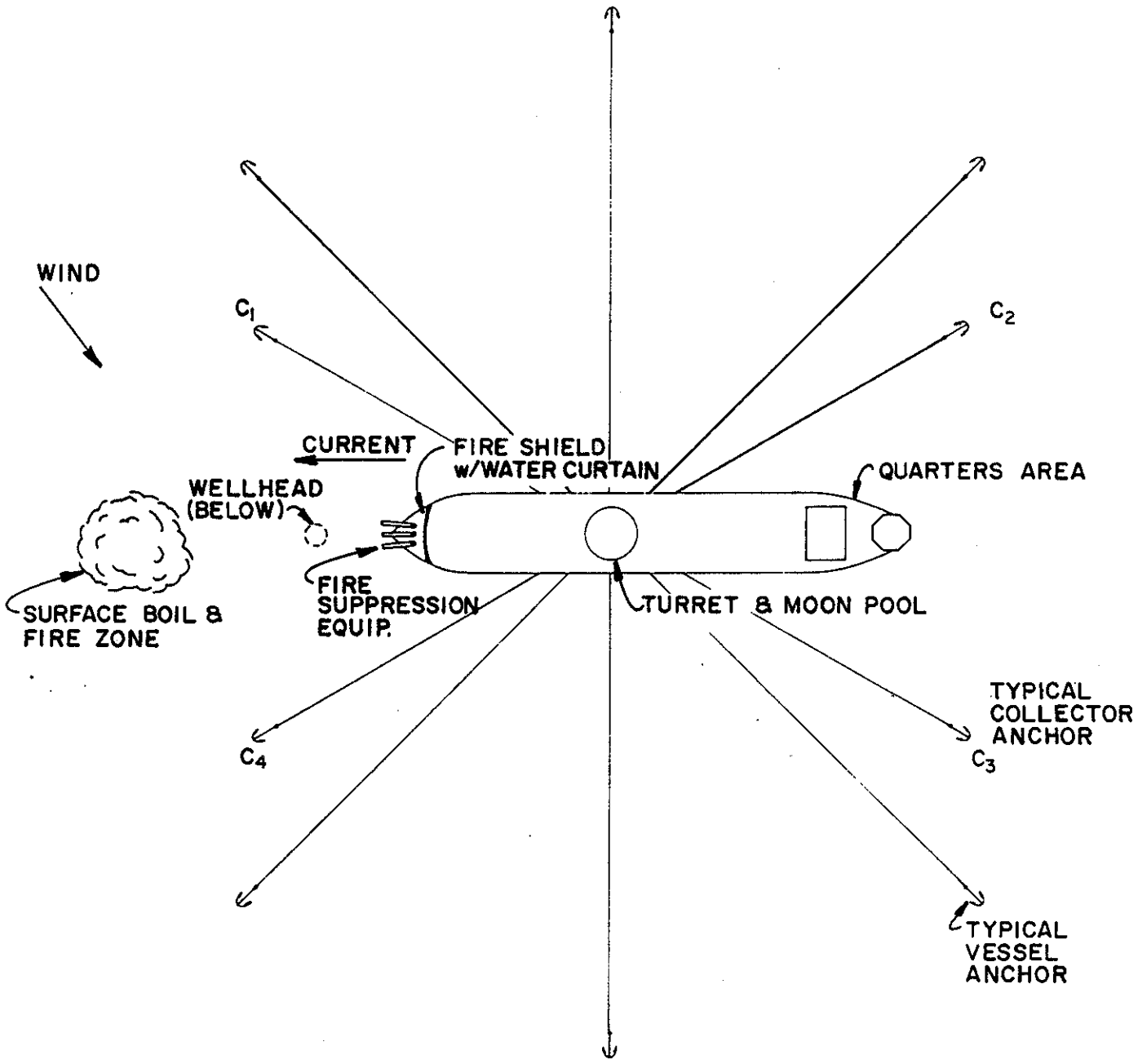

U.S. DEPARTMENT OF THE INTERIOR
MINERALS MANAGEMENT SERVICE

Brown & Root Development, Inc.
HOUSTON, TEXAS

SCALE: NONE	TITLE OF DRAWING:
DRAWN BY: R.VYBIRAL DATE 8-2-85	COLLECTOR DEPLOYMENT
CHECKED BY: ANLS DATE 8-20-85	SCENARIO-1
APPROVED: EEP DATE 8-20-85	
CUSTOMER APPROVAL	CONTRACT NUMBER XC-0030 / DRAWING NUMBER FIGURE 3.6-37

If wind and current are not in the same general direction, then the tanker position could be as depicted in Fig. 3.6-38. The tanker should be positioned in the safest location relative to the wellhead and fire.

5. Transfer the position reference data from the survey vessel to the tanker's Acoustic Position Reference System (APRS) and the Dynamic Positioning/Automatic Station Keeping (DP/ASK) System. Now the tanker, the ROV and the transponders can be displayed on the screen on the tanker (Figs. 3.6-47 to 50).
6. Deploy the collector anchors as described in Section 3.6.2.1.
7. Attach the risers to the collector, hook up the riser tensioner, and mount sonar, transponders, camera and the velocity sensors on the collector (if not already done). See Section 3.4 for riser handling and deployment.
8. Check all systems for operation.
9. With the relative positions of the wellhead and tanker etc. known, lower the collector-riser assembly through the moon pool as depicted in Figures 3.6-39 and 40.
10. Complete the installation of the collector per Section 3.6.5.5.
11. Close the diverter valves on the collector (see Section 3.3).
12. Start the collection, separation and treatment processes on-board the tanker.

3.6.5.4 Debris Removal

It is important to clear large debris from the wellhead area to allow the collector to be positioned close to the blowout source. Various studies conducted in Norway have emphasized the need to place the collector on the seabed. This would, indeed, be an ideal situation resembling a floating production system (FPS). However, such a system would be impractical for a blowout situation. The other studies have asserted that for high collection efficiency the height (h) of the collector above the point of discharge should be as small as possible. In fact, theoretically a 100 percent collection efficiency can be attained if h was nearly zero (see Fig. 3.1-13).

If so, then the debris removal would not be necessary if the BOP is higher than all the debris near it, or if the latter was one collector diameter away from the center of the plume.

If the debris is taller than the BOP then its removal should be attempted only if its height above the blowout source exceeds a certain value dependent upon the water depth. Based on Dr. J. H. Milgram's analysis (see Fig. 3.1-13 and Appendix 2.6) and the use of double riser/collector design, the allowable collector heights (for 95 percent collection efficiency) would be:

Water depth	Allowable h
200 ft	Less than 15 ft
400 ft	Less than 20 ft
600 ft	Up to 20 ft
800 ft	Less than 25 ft
1000 ft	Up to 25 ft

For a single 20 inch riser and collector the allowable height (h) would be 10 ft or less.

A reduction in collection efficiency of, say, 7 percent due solely to the collector height would mean that an amount of oil equal to the assumed daily discharge rate (ie. 30,000 BPD) would be lost in about 14 days. If it takes 5 days to clear the debris, then as much as 150,000 Bbls oil would be lost during those 5 days.

Important: Within the validity and accuracy of the theoretical calculations it can be concluded that the debris removal may not be cost-effective or mandatory under conditons discussed above.

If it becomes absolutely necessary to remove debris, the attempt should be made only if it is manageable considering its size,

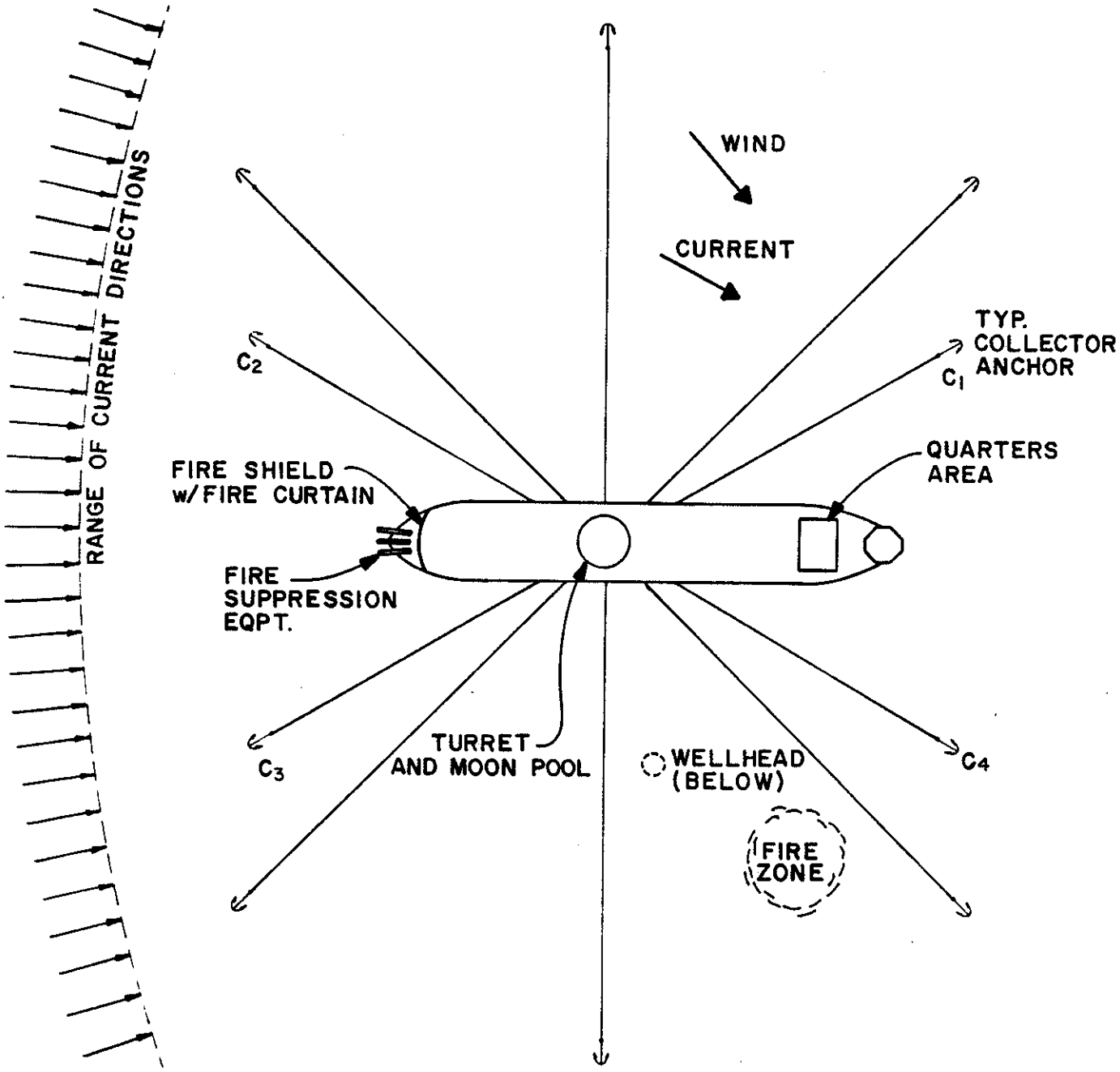

U.S. DEPARTMENT OF THE INTERIOR
MINERALS MANAGEMENT SERVICE

Brown & Root Development, Inc.
HOUSTON, TEXAS

SCALE: NONE	TITLE OF DRAWING: COLLECTOR DEPLOYMENT SCENARIO-2
DRAWN BY: R.VYBIRAL DATE 8-2-85	
CHECKED BY: ANLS DATE 8-20-85	
APPROVED: EGB DATE 8-20-85	
CUSTOMER APPROVAL	CONTRACT NUMBER XC-0030 / DRAWING NUMBER FIGURE 3.6-38

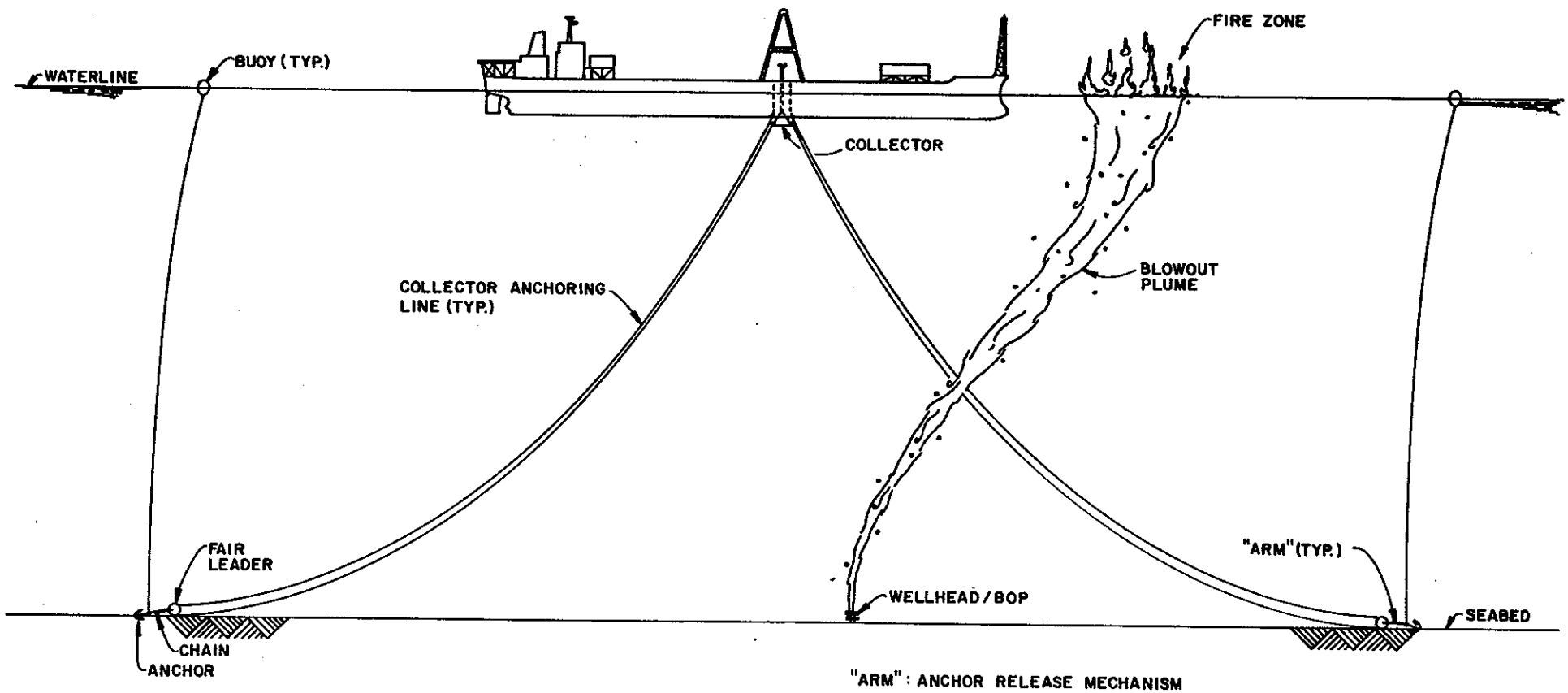

"ARM" : ANCHOR RELEASE MECHANISM

REVISIONS	BY	DATE

CR 2001

NOTES

U.S. DEPARTMENT OF THE INTERIOR
MINERALS MANAGEMENT SERVICE

Brown & Root Development, Inc.
HOUSTON, TEXAS

SCALE: NONE	
DRAWN BY: RV	DATE 8-15-85
CHECKED BY: ANLS	DATE 8-20-85
APPROVED: GEB	DATE 8-20-85
CUSTOMER APPROVAL	

TITLE OF DRAWING: COLLECTOR DEPLOYMENT

CONTRACT NUMBER: XC-0030

DRAWING NUMBER: FIGURE 3.6-39

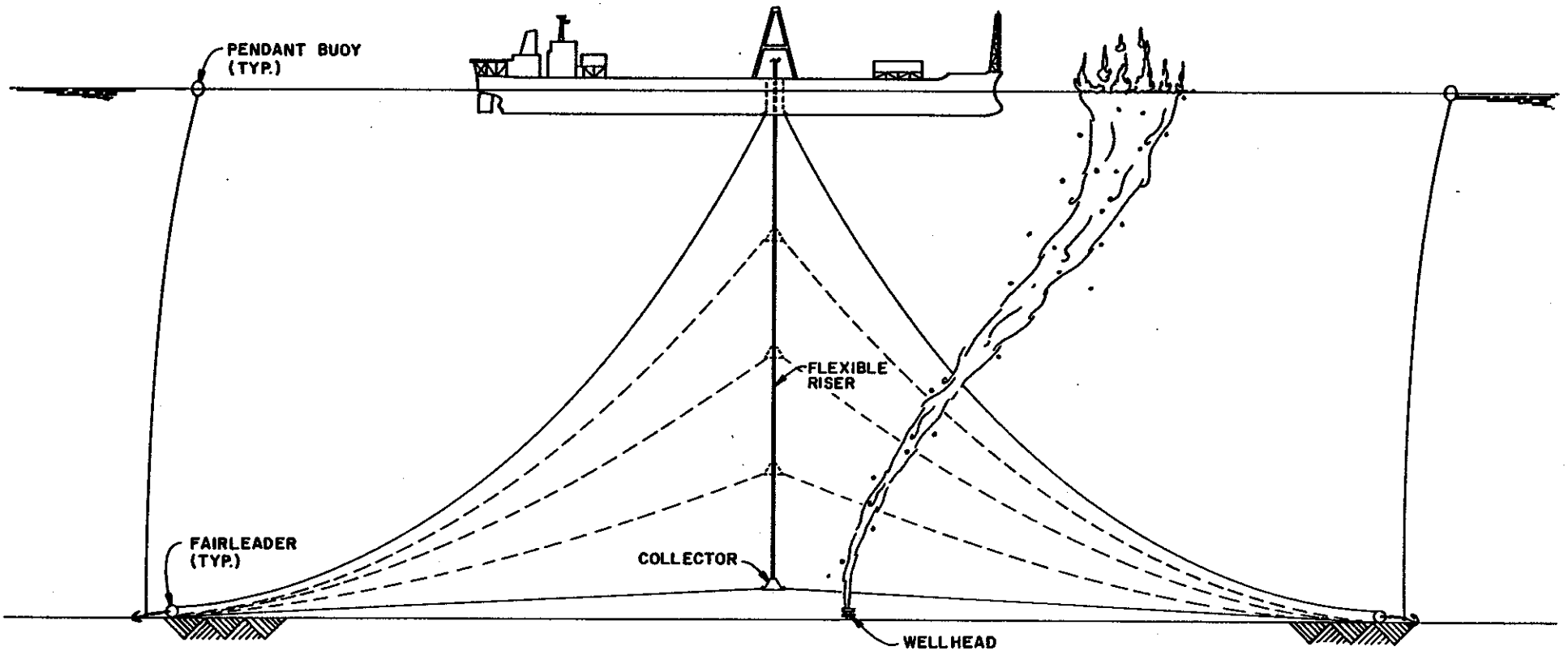

REVISIONS	BY	DATE

NOTES

U.S. DEPARTMENT OF THE INTERIOR
MINERALS MANAGEMENT SERVICE

Brown & Root Development, Inc.
HOUSTON, TEXAS

SCALE: NONE	
DRAWN BY: RV	DATE: 8-15-85
CHECKED BY: ANLS	DATE: 8-20-85
APPROVED: EEV	DATE: 8-20-85
CUSTOMER APPROVAL	

TITLE OF DRAWING: COLLECTOR DEPLOYMENT

CONTRACT NUMBER: XC-0030

DRAWING NUMBER: FIGURE 3.6-40

CR 2001

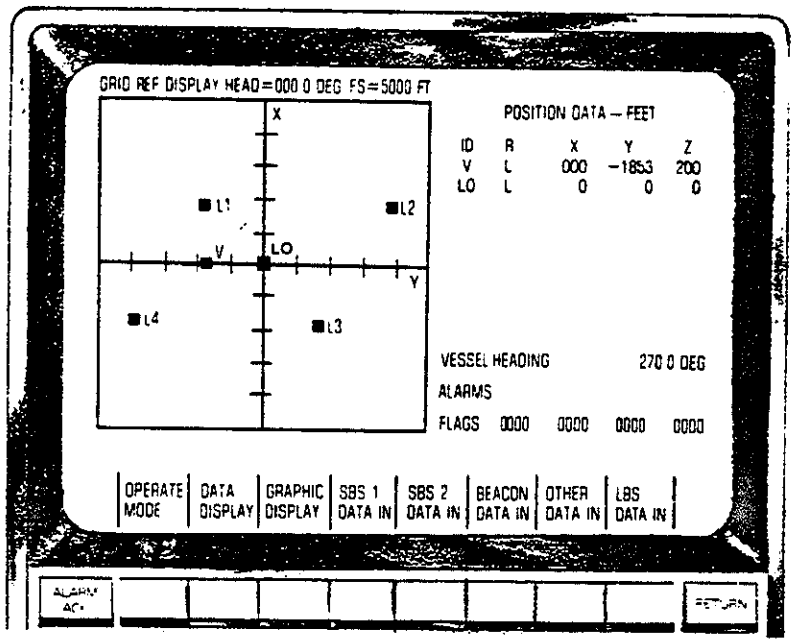

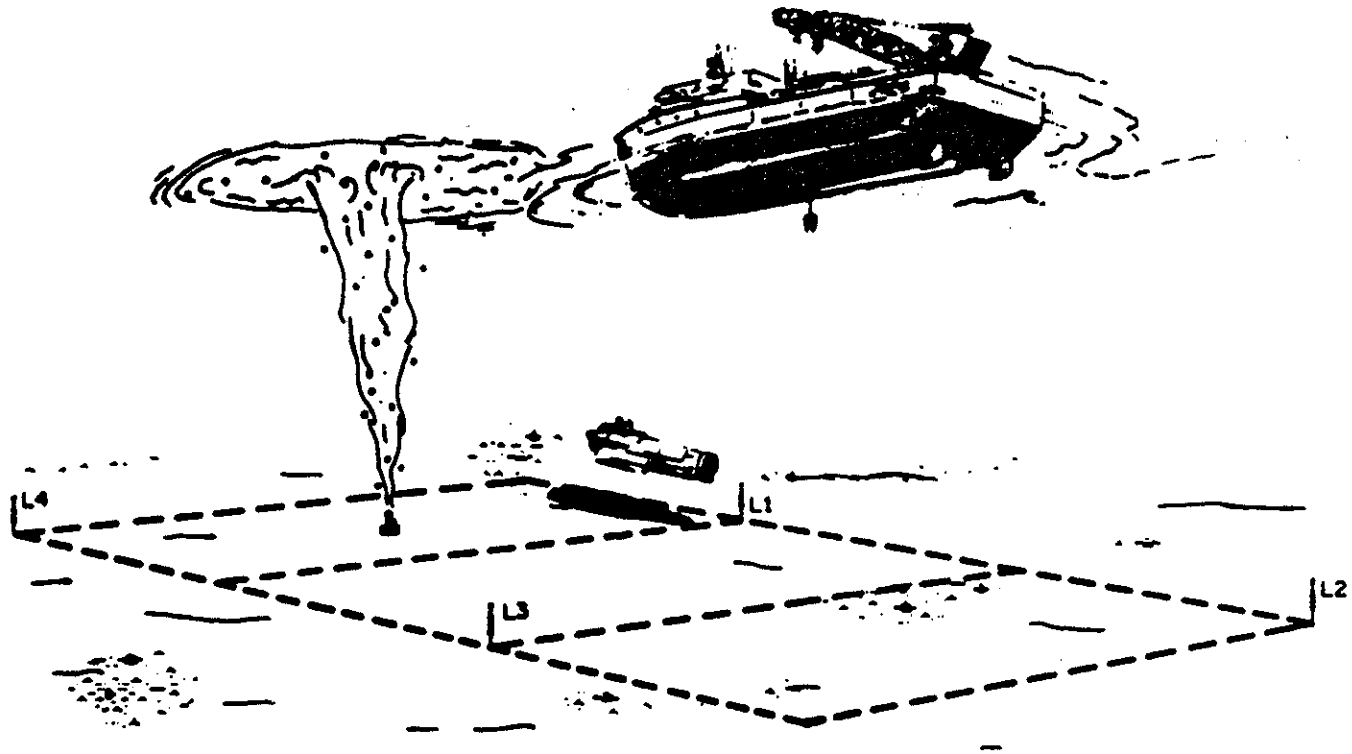

U.S. DEPARTMENT OF THE INTERIOR
MINERALS MANAGEMENT SERVICE

Brown & Root Development, Inc.
HOUSTON, TEXAS

SCALE: NONE	TITLE OF DRAWING: TYPICAL POSITION-REFERENCE DISPLAY (GRID COORDINATES)
DRAWN BY: R.VYBIRAL DATE 8-14-85	
CHECKED BY: ANLS DATE 8-20-85	
APPROVED: EEP DATE 8-20-85	
CUSTOMER APPROVAL	CONTRACT NUMBER XC-0030 / DRAWING NUMBER FIGURE 3.6-47

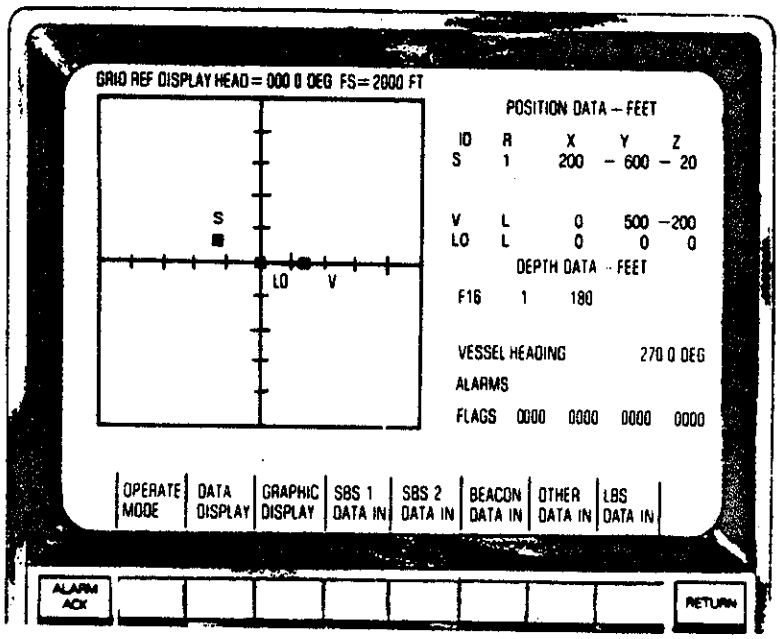

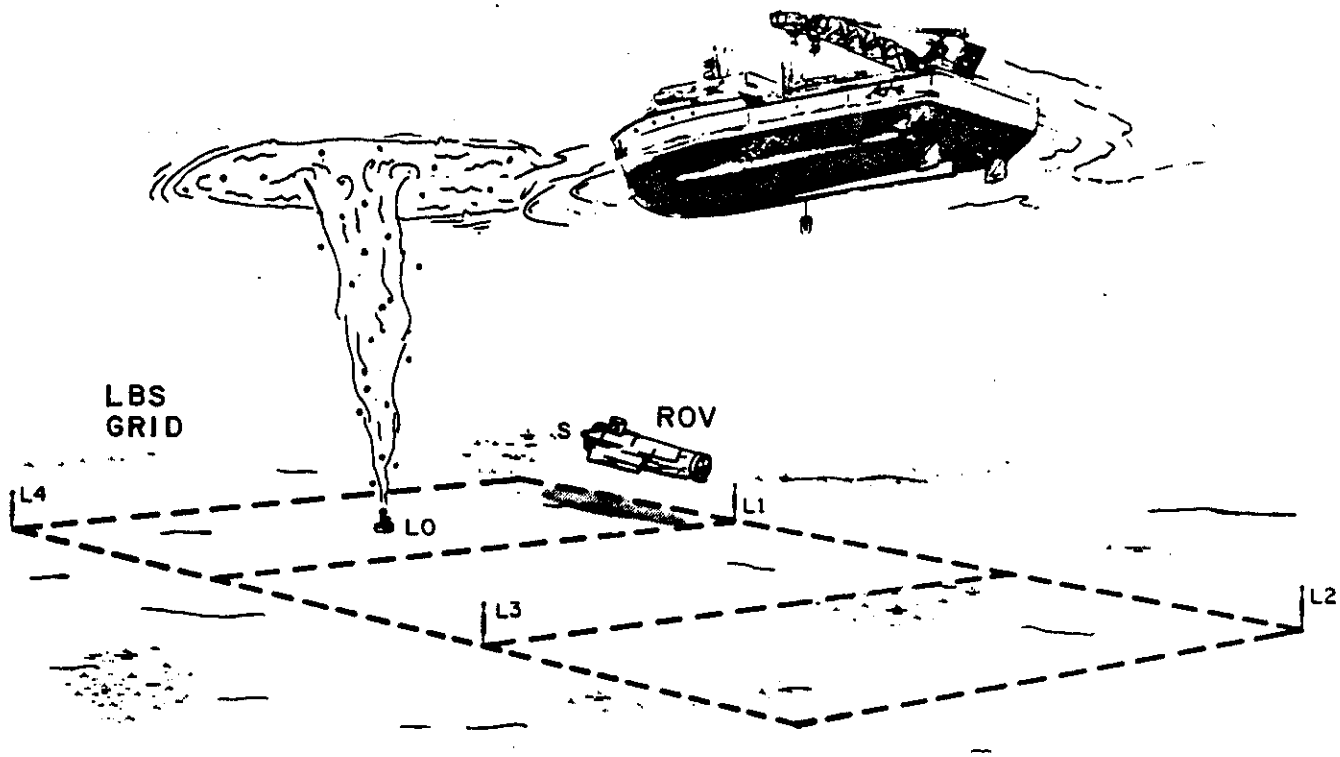

U.S. DEPARTMENT OF THE INTERIOR MINERALS MANAGEMENT SERVICE	SCALE: NONE	TITLE OF DRAWING: GRID-REFERENCE DISPLAY FOR ALIGNMENT OF ROV WITH WELLHEAD	
Brown & Root Development, Inc. HOUSTON, TEXAS	DRAWN BY: R.VYBIRAL DATE 8-1-85		
	CHECKED BY: ANLS DATE 8-20-85		
	APPROVED: EEP DATE 8.20.85		
	CUSTOMER APPROVAL	CONTRACT NUMBER XC-0030	DRAWING NUMBER FIGURE 3.6-48

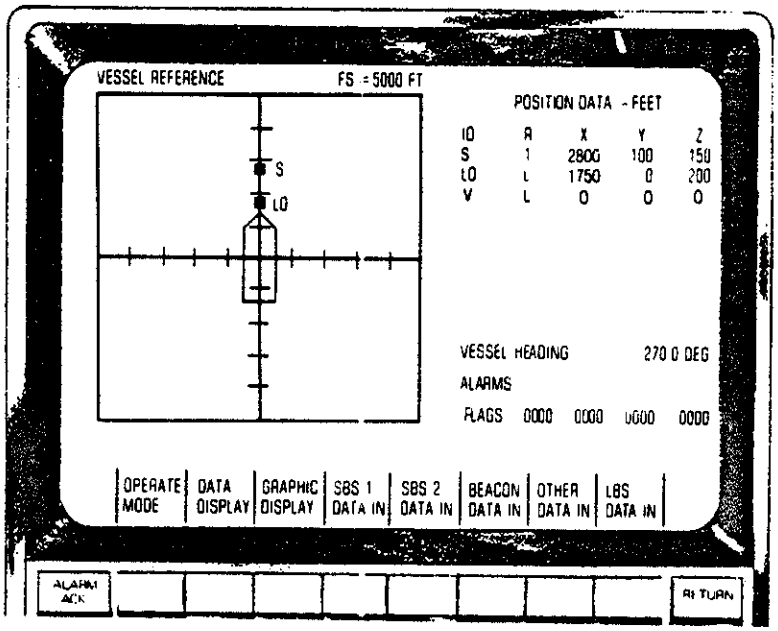

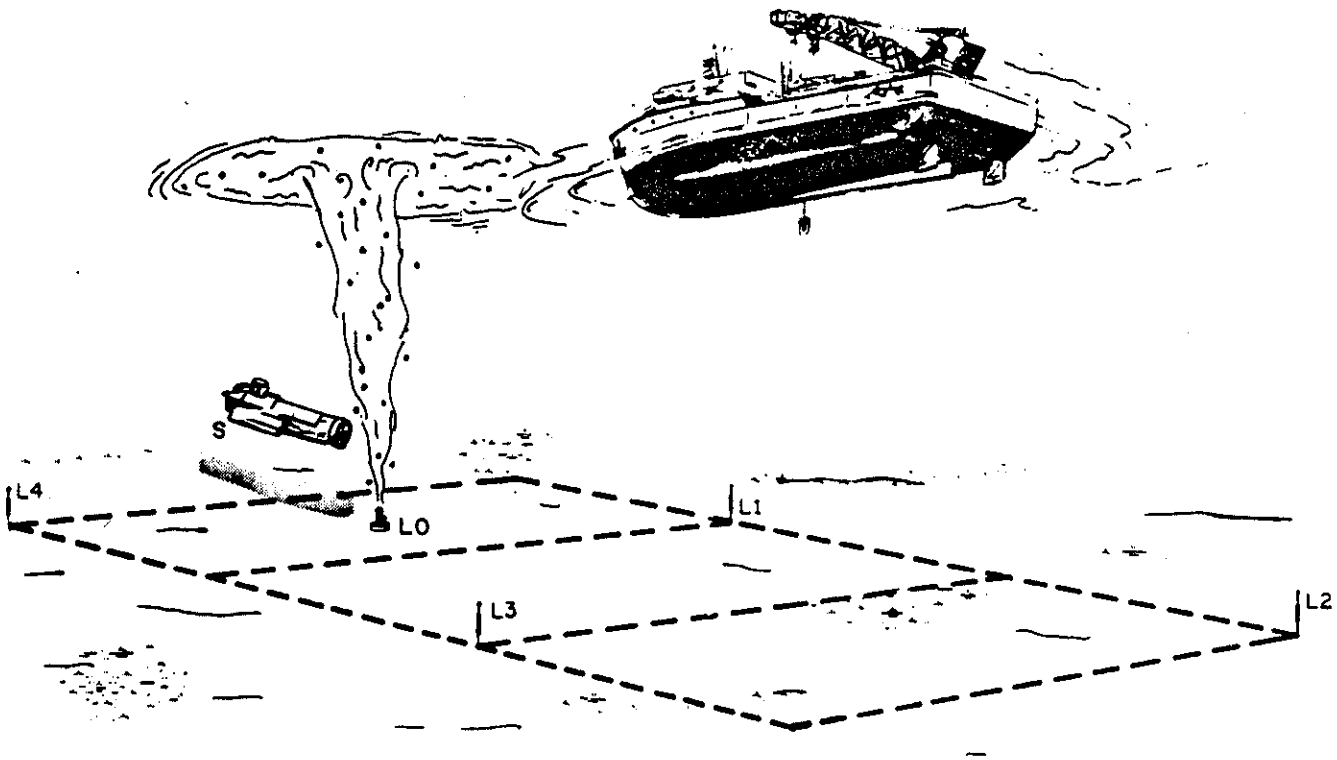

U.S. DEPARTMENT OF THE INTERIOR
MINERALS MANAGEMENT SERVICE

Brown & Root Development, Inc.
HOUSTON, TEXAS

SCALE: NONE	TITLE OF DRAWING: ROV TRACKING DISPLAY — LONG-BASELINE METHOD
DRAWN BY: R.VYBIRAL DATE: 8-1-85	
CHECKED BY: ANLS DATE: 8-20-85	
APPROVED: EEB DATE: 8-20-85	
CUSTOMER APPROVAL	CONTRACT NUMBER: XC-0030
	DRAWING NUMBER: FIGURE 3.6-49

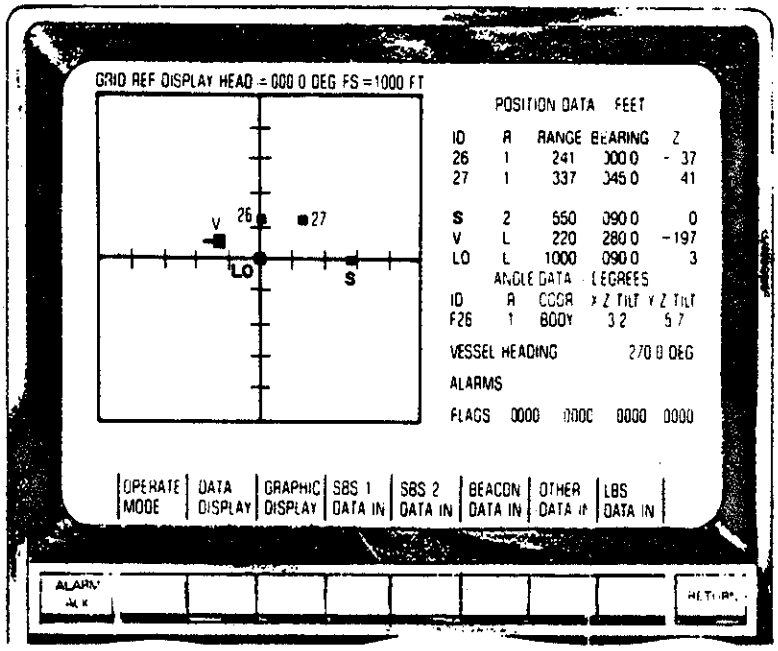

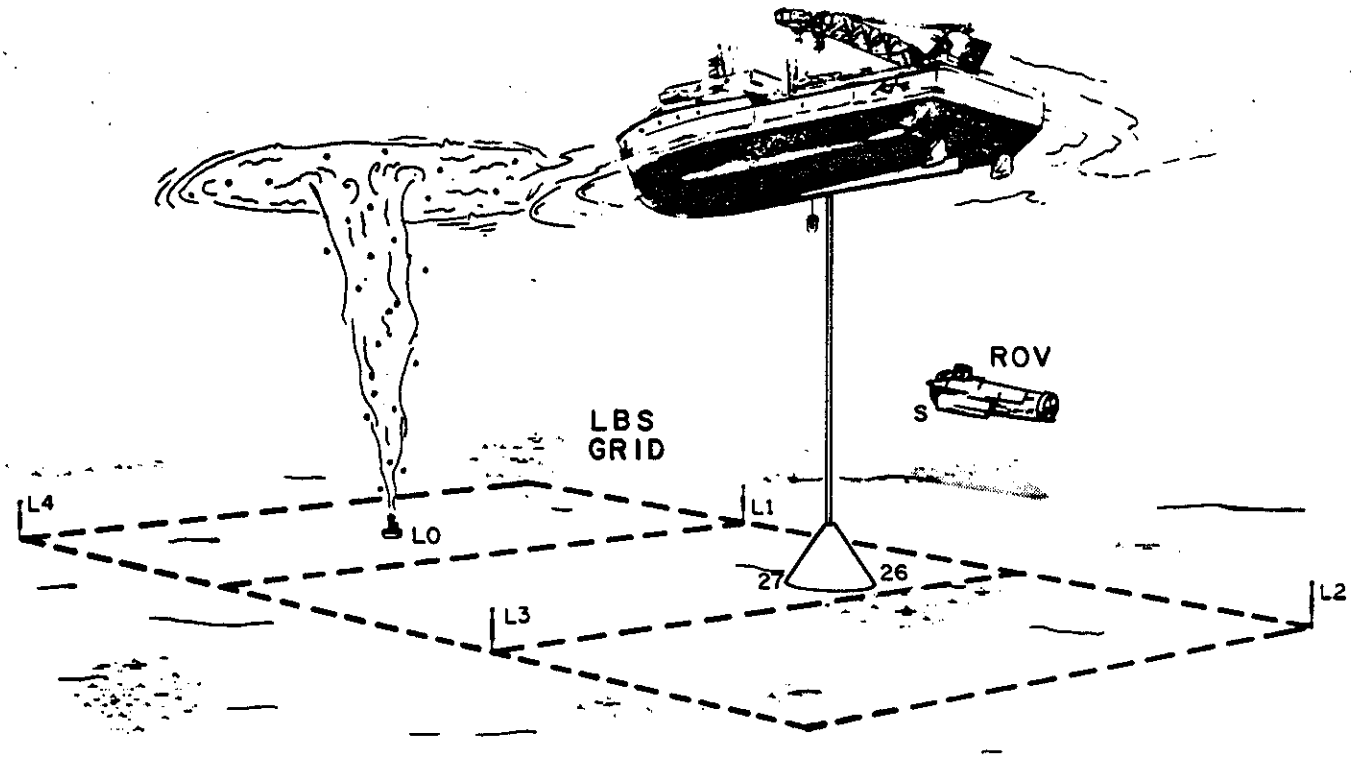

U.S. DEPARTMENT OF THE INTERIOR MINERALS MANAGEMENT SERVICE	SCALE: NONE	TITLE OF DRAWING: SIMULTANEOUS DEPLOYMENT AND POSITION DATA	
Brown & Root Development, Inc. HOUSTON, TEXAS	DRAWN BY: R.VYBIRAL DATE 8-1-85		
	CHECKED BY: ANLS DATE 8-20-85		
	APPROVED: EEB DATE 8-20-85		
	CUSTOMER APPROVAL	CONTRACT NUMBER XC-0030	DRAWING NUMBER FIGURE 3.6-50

configuration, embedment into the seabed, location with respect to the wellhead, and the time required for its removal. The DnV report [6] has suggested that, in terms of time, the collection efficiency (C) is given by:

$$C = 1 - \left[\frac{I + d}{D} \right] P$$

Where I = mobilization and installation time
d = downtime
D = duration of blowout
P = efficiency of collection system

For given P and d,

$$c \# \frac{I}{D}$$

This shows that "I" must be kept as small as possible. Of course, extra facilities (viz, offshore construction or salvage vessel with necessary crew) can be mobilized to carry out the debri removal operation while the collection tanker is being set up on location.

The debris removal operation can be handled as follows:

1. If the surface fire area is away from the vertical wellhead location, bring the MSV, or a tug boat, or a work boat over the wellhead area, lower a grappling hook or a mushroom anchor or a specially built fish-hook attached to a line over the structural debris (Fig. 3.6-41). Use the ROV for observation and guidance and hook-up assistance.
2. Pull on the line to establish an engagement of the hooks or the anchor with the debris.
3. Steam the boat away a sufficient distance away from the wellhead dragging the debris with it. Release the hook from the debris by slackening or with the help of the ROV. The divers could also be used for this operation.

4. If the debris is surrounding the wellhead such that it can not be dragged away without pulling the BOP with it, employ two boats with hooks, grapnels or anchors from both sides as shown in Fig. 3.6-42. After the engagement is established, lift the debris up by hauling-in the lines slowly while coordinating the effort via radio. An ROV at the bottom could provide some guidance if the visibility is satisfactory.
5. The ROV with a manipulator could be used to cut large structures for easy removal with the help of explosives or mechanical saw, depending upon the size of the structure to be cut. This will be a time consuming operation, and should be resorted to only if it becomes absolutely necessary.
6. As an alternative, attach buoyancy lift bags (commonly used in salvage operations) to large structures using ROV or the divers. Lift the debris up to clear the BOP and then pull it away to one side with a tug.
7. Use ROV (or divers) to attach slings to tubulars, such as drill strings, for removing them from the wellhead area if they are a safe distance away from the plume. This was successfully done in 2,200 ft of water by Scorpio (a submersible) in the North Sea, [101]. The grappling techniques were also employed to recover pendants.

3.6.5.5 Collector Deployment and Installation

1. With the tanker a safe distance away from the fire zone connect the risers to the collector and complete all necessary hook-ups including sensors, instruments and the anchor lines to the collector.
2. Move the tanker as close as possible to the wellhead. Attach acoustically releasable links (for emergency abandonment) and closed fairleaders at the anchors and deploy the anchors as described in Section 3.6.2.1. Also see Figs. 3.6-37, 38 and 39. Each fairleader is to be attached at the end of a short piece of chain to prevent it from sinking into the seabed with

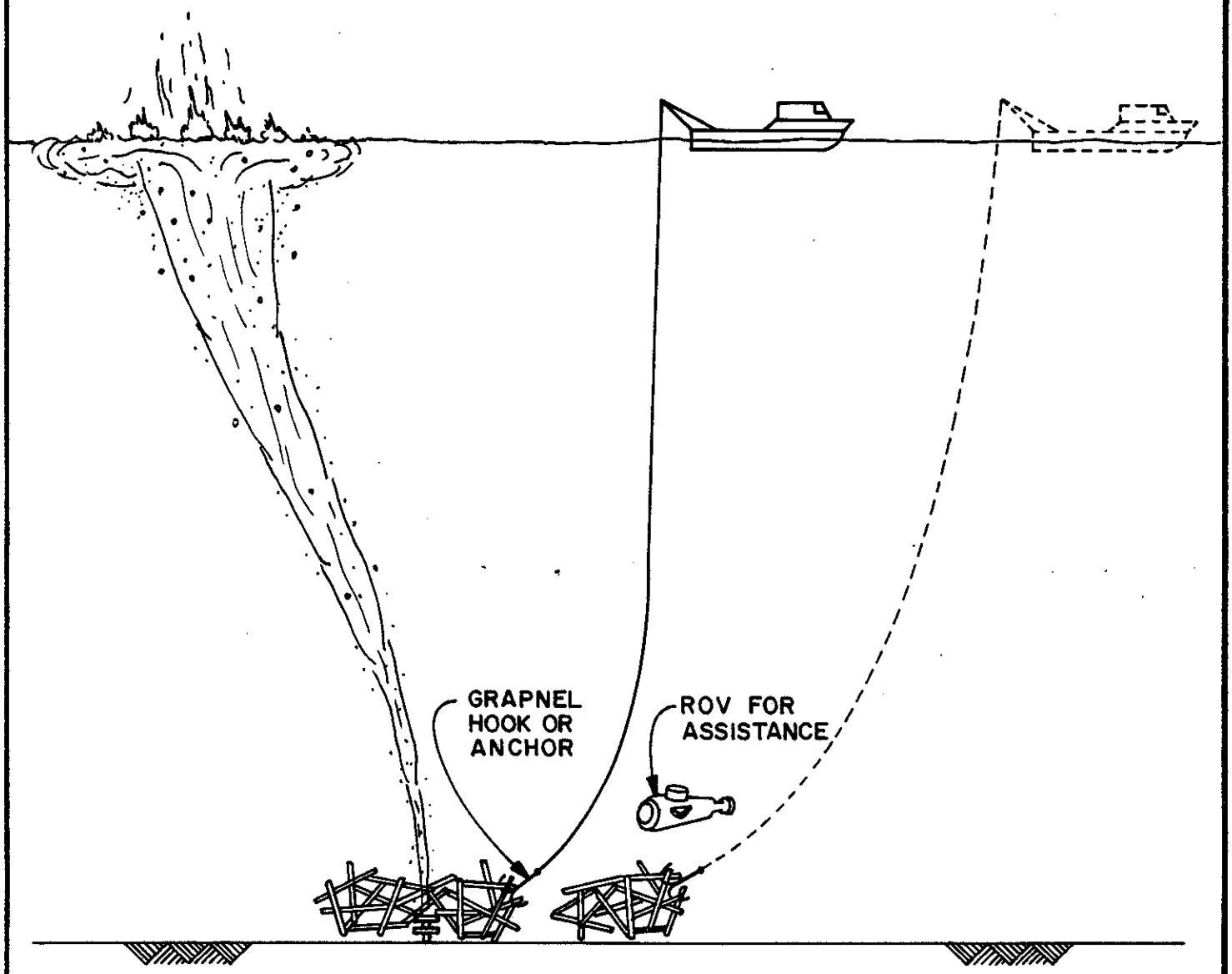

U.S. DEPARTMENT OF THE INTERIOR
MINERALS MANAGEMENT SERVICE

Brown & Root Development, Inc.
HOUSTON, TEXAS

SCALE: NONE	TITLE OF DRAWING: DEBRIS REMOVAL - 1
DRAWN BY: A. FOX — DATE: 8-2-85	
CHECKED BY: ANLS — DATE: 8-20-85	
APPROVED: EEF — DATE: 8-20-85	
CUSTOMER APPROVAL	CONTRACT NUMBER: XC-0030 — DRAWING NUMBER: FIGURE 3.6-41

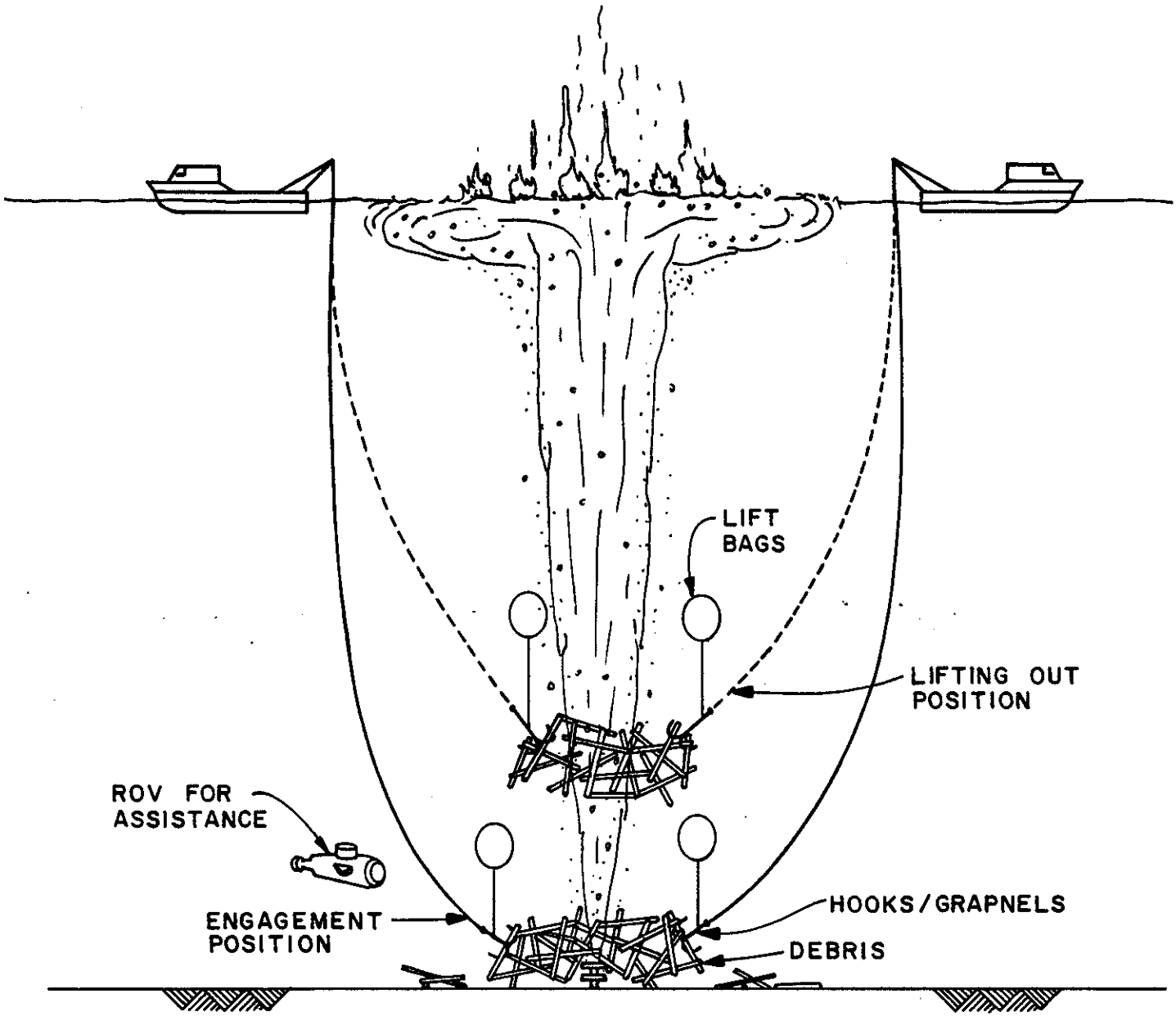

U.S. DEPARTMENT OF THE INTERIOR
MINERALS MANAGEMENT SERVICE

Brown & Root Development, Inc.
HOUSTON, TEXAS

SCALE: NONE	TITLE OF DRAWING: DEBRIS REMOVAL-2
DRAWN BY: A. FOX — DATE: 8-2-85	
CHECKED BY: ANLS — DATE: 8-20-85	
APPROVED: FEO — DATE: 8-20-85	
CUSTOMER APPROVAL	CONTRACT NUMBER: XC-0030 — DRAWING NUMBER: FIGURE 3.6-42

the anchor. The releasable link should be close to the fairleader. Both of these items (i.e. the releasable link and the underwater fairleader) exist (see Appendix 4 for examples).

3. Open the diverter valves on the collector and reset the actuator for closing these valves later.
4. Lower the collector to near the seabed but at least 20 feet above the wellhead/BOP (or the debris, if it is taller than the BOP). See Sect. 3.6.8 for the method of locating the wellhead.
5. Pull on each anchor line to set the anchors.
6. By interrogating the transponders get the signature of the collector on the disply screen. The sonar and video systems are also activated to pick up the plume or wellhead as described in Section 3.6.8. Move the ROV or deploy a frame-mounted sonar behind the collector to monitor the plume as well as the collector (see Section 3.6.8).
7. After getting the "fix" on he wellhead/plume, start maneuvering the collector towards it by winching the cable (Fig. 3.6-43). Move the tanker towards the wellhead.
8. When the collector is over the plume, lower it down as far as it can go. If necessary, move the tanker over to straighten the riser.
9. With the help of the transponder, sonar and video display (and the velocity sensors if used) ascertain the precise positioning of the collector. If necessary, lift the collector up slightly and winch it slowly in the appropriate direction for precise centering.
10. Set the collector down in its final position and apply brakes on the winches. The collector should be sitting on the seabed or the debris if possible, for stability.

3.6.5.6 Emergency Abandonment

The mooring system design and the installation procedures are to be developed for quick abandonment and reinstallation as well. The specified 8 hour time limit for abandonment, and unspecified but similiar rapid reinstallation requirements are taken as the boundary conditions for selecting the procedure.

It should be pointed out that in the offshore business personal experience of the crew are as important as the technical merits of the methods available to perform a certain operation. The procedure suggested here is based on the premise that quick abandonment is more critical than quick reinstallation. The procedure is to be simple, fast and reliable.

Alternative No. 1

1. Install acoustic release mechanism (ARM) at each anchor (for the tanker as well as the collector).
2. When an abandonment becomes necessary, proceed as follows:
   a. Release brakes on the collector winches and slacken all lines;
   b. Lift the collector above the wellhead/BOP;
   c. Move the tanker off location to be out of the gas flow. Reignite the free gas on the water surface and activate fire suppression/firefighting equipment. If the emergency situation is of temporary nature, do not release anchors. Instead, move the tanker away as far as the anchor lines will allow. If the emergency calls for total abandonment, then go to the next step.
   d. Release the collector anchors with the help of the ARM, and haul-in the cable one by one;
   e. Next, release the tanker moorings and haul-in the cables. The anchors with their pendant lines and buoys are left in place;
   f. Propel the tanker away from the blowout a few hundred feet and wait out the storm;
   g. If the tanker must be taken to a sheltered area, pull the riser and collector up (disconnecting riser pieces as needed) and steam off.

Alternative No. 2:

With reference to the criteria for abandonment in severe weather as mentioned in Section 3.6.2.5, if an emergency disconnection must be made, and if the tanker must leave the site where less than 8 hours

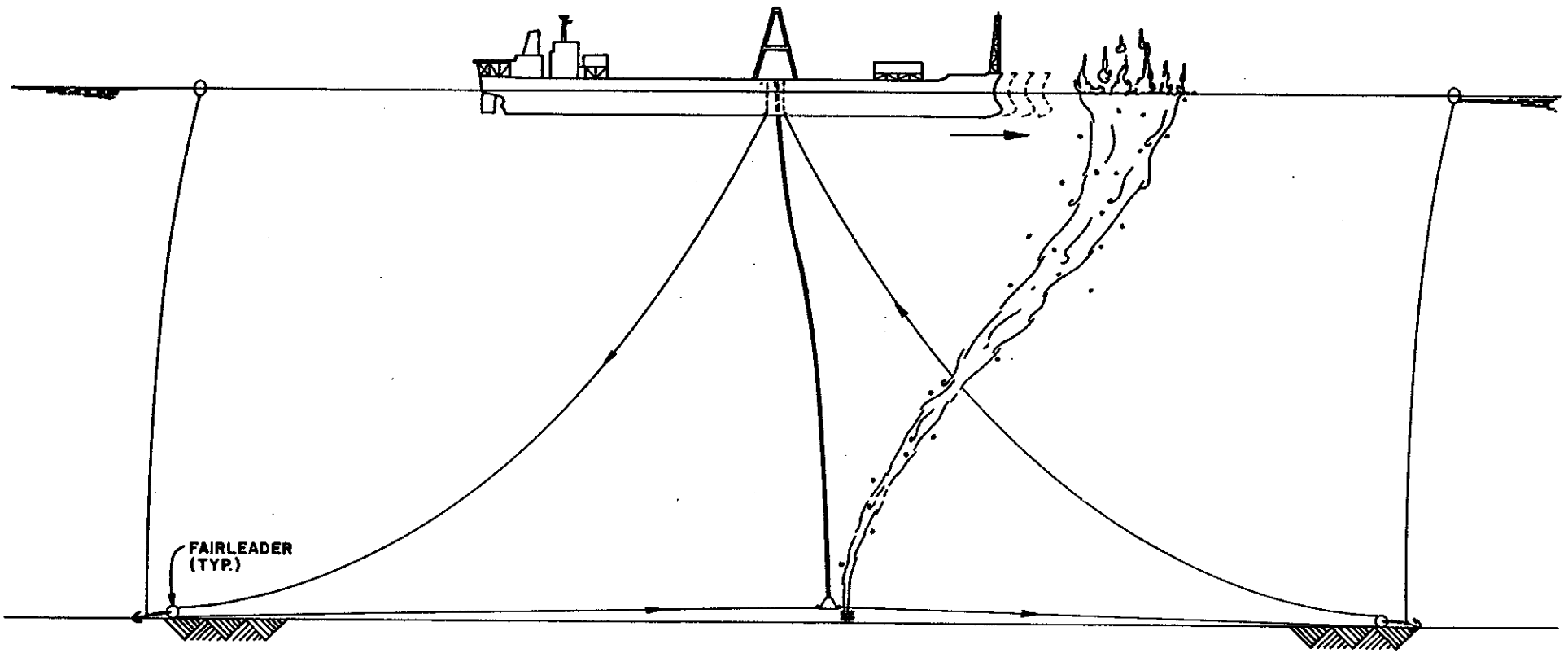

REVISIONS	BY	DATE

NOTES

U.S. DEPARTMENT OF THE INTERIOR
MINERALS MANAGEMENT SERVICE

Brown & Root Development, Inc.
HOUSTON, TEXAS

SCALE: NONE	
DRAWN BY: RV	DATE: 8-15-85
CHECKED BY: ANLS	DATE: 8-20-85
APPROVED: EGP	DATE: 8-20-85
CUSTOMER APPROVAL	

TITLE OF DRAWING: COLLECTOR INSTALLATION

CONTRACT NUMBER: XC-0030

DRAWING NUMBER: FIGURE 3.6-43

CA 2001

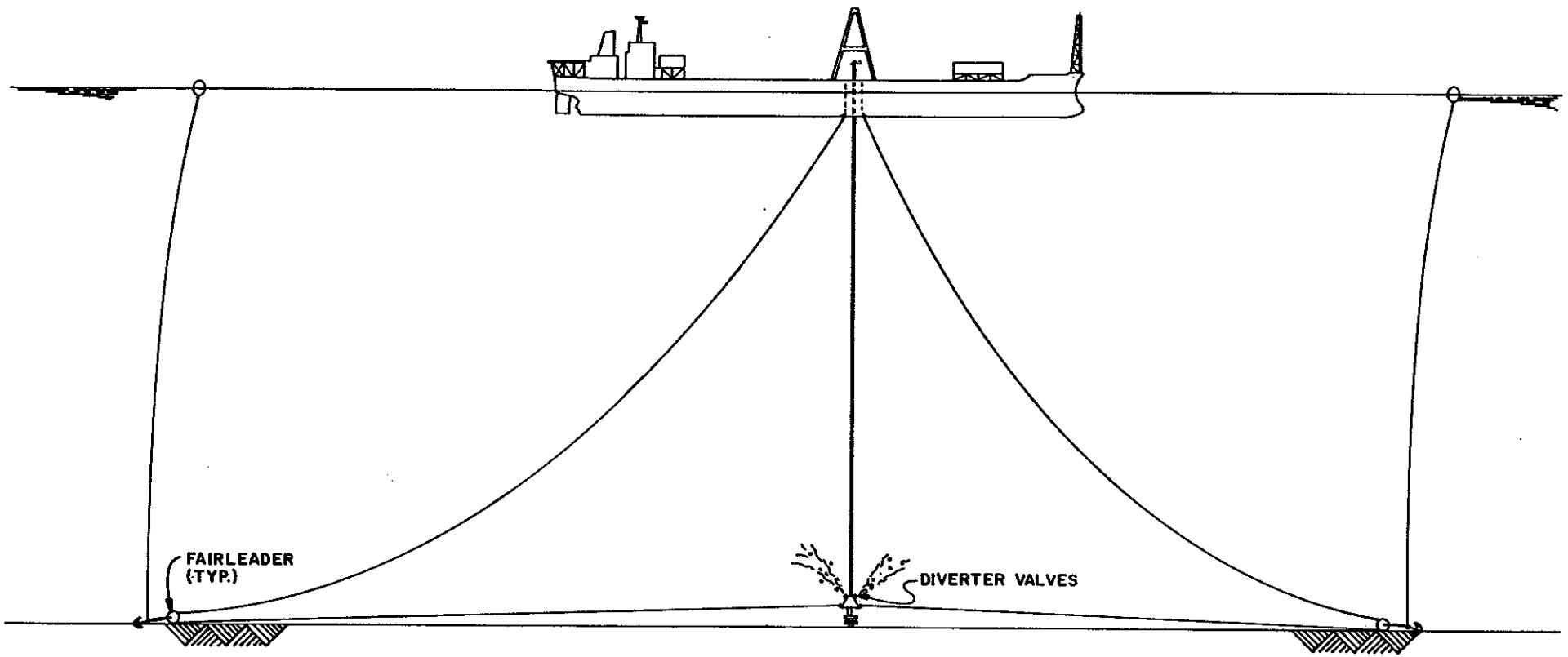

REVISIONS	BY	DATE

NOTES

U.S. DEPARTMENT OF THE INTERIOR
MINERALS MANAGEMENT SERVICE

Brown & Root Development, Inc.
HOUSTON, TEXAS

SCALE: NONE	
DRAWN BY: RV	DATE: 8-15-85
CHECKED BY: ANLS	DATE: 8-20-85
APPROVED: EEP	DATE: 8-20-85
CUSTOMER APPROVAL	
TITLE OF DRAWING:	COLLECTOR INSTALLATION
CONTRACT NUMBER	XC-0030
DRAWING NUMBER	FIGURE 3.6-44

CR 2001

notice is given, then the abandonment procedure would be to run the mooring cables off their respective winch drums, attach buoys, raise the riser/collector assembly and leave the area. The collector anchors would still have to be released from the line as in Alternative No. 1. If a subsequent return to the site is required, the tugs can retrieve the buoys and bring the anchor lines back to the tanker for reeling.

Alternative No. 3:

Section 3.2.2.5 describes some other procedures for abandonment. However, the procedure involving a buoy and a releasable link in the mooring line itself requires the anchors to be preset, a very costly operation. Moreover, in a preset anchor system the mooring components have to be custom-designed for every water depth that may be encountered.

None of the above alternatives allow the collector and riser to be left on location because their reattachment would be impossible.

The emergency abandonment of the ship is discussed in Section 3.2.2.2. The advantages and disadvantages of the proposed methods are summed up as follows:

Alternative 1 is the fastest method of abandonment. The tanker could be off the blowout in less than two hours. The major drawback in this approach is the probability of the collector mooring cables twisting and curling after being released from the anchors. Also the redeployment would not be a quick operation, but it could be much faster than the initial deployment. The problem of cable entanglement can be solved by pulling the collector up before releasing the anchors if the collector riser sections can be disconnected quickly.

The advantage of Alternative 2 is that it is the most economical and it does not require the expensive ARM system. The disadvantages include:

- o slow operation, particularly in an emergency situation;
- o no time saving (over Alternative 1) in redeployment;
- o if mooring cables are run off and abandoned without attaching a buoy, then their retrieval will be much more difficult and time consuming. Also, the retrieval of the buoys will be difficult if they drift into the fire zone. This approach can not be used for the collector anchors.

The major advantage of Alternative 3 is the relative ease of reattachment of mooring lines. Since the anchors are left on the seabed, they do not have to be retrieved or redeployed. The disadvantages are:

- o The inital presetting of anchors will be a costly and time consuming undertaking. Also the mooring system would have to be specially designed. Therefore, these subsystem components cannot be pre-planned for a blowout response;
- o The same approach can not be used for the collector anchors since their presetting is not possible. The collector must be released from its anchors during abandonment, and then reattached for redeployment;
- o This alternative is the most expensive of all.

3.6.5.7 Survivability of Abandoned Systems

Since the only abandoned systems under any of the alternatives given above are the pendant or mooring lines with buoys, the survivability is not a criterion. These buoys should be able to ride out the storm. Even if they break loose, at the most a new anchor and buoy would have to be provided.

3.6.5.8 Redeployment

The procedure for redeployment would depend upon the manner in which the abandonment was carried out.

1. If ARM were used to release the anchors, then:
   - o after arriving at the location and re-establishing the

position fixes from previously obtained data, retrieve all the anchors and reattach to the mooring lines and re-energized ARM;

- o deploy the anchors and the collector as before;
- o alternatively, deploy new anchors with pendant buoys (to save the time of anchor retrieval) if spares are on board. The abandoned anchors could then be retrieved later after the collection process has resumed. This approach would save approximately 50 percent of the anchor redeployment time amounting to nearly one hour per anchor (or more).

2. If all the anchors have already been picked up, then the redeployment steps will be the same as above except that the retrieval of anchors would not apply.

3. If all mooring lines were run off the drums, then:
   - o after arriving on location retrieve the mooring lines and collector anchors with their buoys;
   - o remove the buoys and start the cables on their winch drums;
   - o re-establish the position fixes for the tanker, and haul in the mooring lines to re-set the anchors;
   - o redeploy the anchors for the collector;
   - o locate the wellhead and install the collector as before.

4. If a pre-set anchor system was used and the abandonment was by detaching at the spring buoy, then:
   - o after returning on location retrieve the spring buoys and reattch the mooring cables. Also retrieve the collector anchors;
   - o re-establish the tension levels in the mooring lines;
   - o verify the vessel position, and adjust if necessary;
   - o redeploy the anchors for the collector;
   - o locate the wellhead and install the collector as before.

3.6.5.9 Lightering/Offloading

The basic scenario is outlined in Section 3.2.5.1. It is surmised that the anchoring of the shuttle tanker will not be necessary.

During the lightering and transfer operations the shuttle tanker would be kept in "holding" position at a safe distance (see Section 3.2.5.1) under its own power. The tugs will handle the transfer hoses. After the hoses have been connected, the tugs will be available to help the shuttle tanker hold its position if needed.

When the loading is complete, the hoses will be disconnected and transferred to the collection tanker. The shuttle tanker will steam off for unloading.

3.6.5.10 Fire Entering

In spite of the presumed feasibility of positioning the tanker over the fire zone as suggested by Capt. Robinson [5, 54], the operational analyses and procedures suggested herein are based on avoidance of such an approach. It is, however, realized that the conditions at the blowout may make it unavoidable, and fire entering may become necessary. Some of the underlying philosophies and the basic approaches to cope with these situations are:

1. Always approach the fire zone with the bow of the tanker;
2. As far as possible keep the tanker heading between 20° to 45° of the wind direction so that the fire and the gases are blown away from the work area and the quarters area on the tanker (see Fig. 3.6-37);
3. Should it become necessary to have the wind to the stern of the tanker, then position the tanker on the upwind side of the fire zone (Fig. 3.6-38);
4. Do not attempt to displace the fire by moving the tanker over the fire zone unless it is unavoidable. The tanker must be maintained in proper heading for stability and minimum exposure to fire and gases;
5. Keep the tanker hull cool and upper areas shielded as described in Section 3.2.2.4. Protect the above-water portion of the hull directly exposed to the fire by water curtains;
6. Do not extinguish the fire. Instead, suppress it with water sprays as described in Section 3.2.2.8;

7. Protect the deck areas exposed to fire and heat with the deluge system.

3.6.5.11 Mooring and Station-keeping

See Section 3.6.1 for details.

3.6.5.12 Shipboard Operations

The general ship syustems are described under Section 3.2. The riser handling is covered in Section 3.4, and the process and separation related operations are outlined in Section 3.5.

3.6.5.13 Safety Measures

"Safety in Operations" is a universal motto, and its importance on a blowout collection ship can not be over-emphasized. Safety measures in offshore operations are covered in Section 3.2.

Additional safety measures are listed below:

1. All work and living areas on all the vessels operating near the blowout must be equipped with gas and temperature sensors with alarms;
2. Adequate medical facilities should be provided on the vessels to treat toxic gas effects and burns;
3. In an emergency, requiring abandonment of the ship, use of a rescue vessel or motorized life boat should be preferred over life rafts, since the latter can uncontrollably drift into the "boil" or the fire zone;
4. All personnel onboard working in the exposed environments must use gas/oxygen masks;
5. All safety equipment must be checked on a daily basis to ensure that they are in working order;
6. The tanker must be provided with a "citadel" equipped to preserve the lives of the personnel until the vessel is removed from the hazards;
7. Adequate emergency support for offshore personnel should be provided;

8. Considering the fact that the use of ROV's and, perhaps, diving facilities would be essential, only highly trained ROV operators and divers should be employed.

The outfitting of the tanker for the necessary safety measures, and equipping it with all the safety devices is well within the state of the art and technology. Their specific details are beyond the scope of this study.

3.6.6 System Operation and Maintenance

One of the most uncommon aspects of the ship-mounted subsurface collection system is its preventative maintenance requirements. The fact that the system is intended for unforewarned emergency responses, it must be kept in top working condition. Fortunately, most of the special equipment components for blowout collection is not particularily sophisticated or delicate. But they still need to be protected from rust, corrosion, weathering, deterioration and damage. All machinery items, instruments and control systems must be kept in perfect working condition. If the tanker is not used for any other purpose, it is mandatory that a preventative maintenance crew is assigned on full time basis to keep it in readiness. Certain items such as sonars, video and other acoustic devices (if dedicated to the tanker) will need special care. This includes the remote anchor release mechanisms and DP/APRS systems. The gas alarms, depending upon their design, may need to be exercised daily or other regular intervals.

In summary, a maintenance schedule must be prepared and followed with strict precision. All large and small items should be listed on the Preventive Maintenance (PM) chart with their nature and frequency of maintenance.

If the tanker is utilized in some other purposes (such as an early production or well-testing system) most of the ship systems, process

equipment, and safety systems will be operationally maintained. In this situation, the equipment should be checked for wear and tear; and other items (not in use) should be maintained as discussed above.

Personnel

As stated in Section 3.2.1.5, a total of 42 crew personnel may be required during a blowout response. This complement includes:

Basic ship's crew - 30

Collector/riser crew - 12

Additional personnel may be required. It can be assumed that a part of the ships crew would be trained personnel for process separation, storage and lightering/transfer operations. Another group would be trained in fire fighting, life support and related activities.

The Marine function and duties to operate and maintain the vessel in peak condition would require about 7 personnel. This may have to be the permanent maintenance crew during non-operating periods. When the tanker is on call, this crew may receive part-time or as-needed assistance from the craft and labor/ordinary seaman pool, the latter being shared by all Marine, Process, Life Support, Rigging, and Collector Deployment Groups.

Shifts and Crew Rotations

In anticipation of the blowout collection call lasting for months, the provision must be made for individuals and groups of crew members trained for their specific assignments, to be available on rotation, or as emergency replacements.

Maintenance Functions

Maintenance can be divided into the functioning areas of shipboard marine-mooring systems, collector, and the process equipment. The shipboard area includes all utilities and life support systems and is maintained by the marine engineer, assistant marine engineer, oilers and ordinary seamen with assistance from the craft and labor pool.

The collector and the process engineering/maintenance covers all equipment for the collection, separation, storage and transfer of crude oil and handling of gas. This maintenance will be conducted by the electrical/instrumentation and mechanical journeymen and their respective craft helpers, plus assistance from the labor pool when required.

All maintenance should be performed on a preventative maintenance basis where possible rather than repair after failure. Adequate spare parts for marine and process equipment should be warehoused on board with the utilization of an established reorder level program.

3.6.7 Contingency Plans

The nature of the blowout collection operation coupled with unproven technology and hardware (in the specific sense), many unforeseen and anomalous situations can arise. These may be related to:

- o Operational techniques
- o Operational procedures
- o System failures and malfunctions
- o Hardware/component breakdowns
- o Logistics and supply
- o Preparedness
- o Lack of planning
- o Natural elements, etc.

Therefore, adequate contingency planning is essential. Of course, it is realized that no contingency plan can cover all situations, but it should be as comprehensive as possible in relation to the risks and consequences.

Utilizing the experiences from offshore operations and some hypothetical situations related to a blowout response, some basic items can be considered in a contingency planning for system failures. For example:

1. Provide redundant systems for safety and life saving devices.

2. Mobilize a surface collection device to collect the oil that escapes the subsurface collector, or that can be used as a backup system if the subsurface collector can not be installed on the wellhead.
3. If the separation/processing system fails to achieve the desired degree of separation, consider using onboard skimmers (of the type used on floating production systems), multiple stage separation, or heavy usage of chemical dispersants.
4. If the fire fighting, deluge and water curtain systems fail, discontinue operation, and get off the location until the failed sytems are repaired.
5. Carry enough spares onboard for such items as riser hose, buoys, mooring cables, anchors and winch parts.
6. If the riser gets damaged, get off the location and replace it.
7. If the anchor release mechanism fails during emergency abandonment, either cut the cable or run it off the drum;
8. If certain vital life support systems fail, get off the location and, if necessary abandon ship.

These are just a few examples illustrating the remedial actions that can be taken when faced with system failures.

3.6.8. Methods and Equipment For Locating The Well-Bore And Positioning The Collector

The science and technology of underwater survey, inspection, mapping, and search is well advanced. The guidelineless re-entry systems used in drilling operations is the best and most relevant example. Many other systems have also been developed and used successfully for precisely positioning large objects on the ocean floor in deep waters. Noteworthy, are the systems used for the installation of Shell Oil Co.'s Cognac platform, Exxon's Lena Guyed Tower, Conoco's Hutton TLP and many subsea production systems. The drill bit steering devices used in drilling of delineation or relief wells and the MWD (measurement while drilling) tools are other examples of technological advancements.

But there is a difference. Most of the systems to date have been developed and used under normal oceanographic conditions, which, by no means are friendly. The conditions created by the blowout add a new dimension to the already hostile environment. The most influencing aspects of a blowout, as they relate to the underwater positioning systems, are the gas bubbles and the noise. It is to be noted that most of the underwater survey and monitoring equipment work on the principle of acoustics. The noise and the gas bubbles associated with the blowout can be expected to adversely affect the functioning of acoustic instruments. Neither off-the-shelf nor purpose-built acoustic instruments, that include sonars, hydrophones, sub-bottom profilers, pingers/beacons, transponders, etc, are known to have ever been used near a blowout. The attempt to use hydrophones at the Ixtoc I blowout was unsuccessful due to installation problems. No record has been found of any measurements of the noise level at a blowout. However, the sonar and acoustics experts are of the opinion (verbally expressed) that the noise near the wellhead would be of a relatively lower frequency. If so, then medium to higher frequency (100 KHz and above) instruments should work satisfactorily in the vicinity of the wellhead as long as the acoustic waves do not have to pass through the gaseous plume. What is considered to be a "blessing in disguise" is the fact that the gaseous plumes underwater are one of the best targets for sonars. The modern video cameras can be used even in limited visibility, and will not be affected by the gas or the noise.

To recapitulate, the present limitations to a reliable locating system are:

1. Lack of available information on the acoustic spectrum around the blowout plume;
2. Absence of experience of actual or experimental operation of acoustic instruments near subsea blowouts or gaseous plumes;
3. Unfamiliarity with the reflective or attenuating character of the plume for the acoustic waves;

4. An apparent lack of interest or activity among the manufacturers, developers, and the operators of underwater positioning systems to deal with blowout situations.
5. Inability of acoustics to penetrate its directional energy through the aerated environment.

The positive aspects are many too:

1. The subsea instruments' technology is well advanced and continues to progress to dealing with most of the situations. Some newer concepts, such as heat sensing devices, successfully used in astronomy and naval systems, have not been tried for commercial offshore applications. In other words, the technology exists, although proven systems and hardware do not for the application.
2. Every "system" used so far has been unique in terms of overall installation and application. But, individual components making up the "system" have been generally off-the-shelf type. This background provides a basis for confidence that another unique system can be put together for locating the blowing well;
3. The general location of the wellhead is known (within just a few feet) from the "boil" and the fire on the surface. If the magnitude and the direction of the current is known, a reasonable estimate can be made of the horizontal separation between the wellhead and the surface "boil". This is the most positive and visual means of establishing the general location of the wellhead inspite of the meandering of the plume;
4. The precise coordinates of the glory hole, or the wellhead, are (or should be) known. This information is very valuable as a global reference point;
5. The art and science of subsea navigation, acoustic position referencing, submarine tracking, and grid networking are well established;
6. As pointed out earlier, a gas bubble plume is one of the best targets underwater for a sonar;

7. Although the noise spectrum of a blowout is unknown, some ultra-high frequency sonars (such as Mesotech's Model 971 at 675 KHz) can be dependably used to locate the plume without being affected by the ambient noise.
8. The video camera mounted on a tracked Remote Operated Vehicle (ROV) remains a viable and extremely valuable tool, subject only to sufficient visibility. The airlift and water eductor systems (underwater) have been observed to swallow-in the localized cloudiness or turbidity at the suction end. The powerful gas-lift action of the plume is, therefore, not expected to create any turbidity near the wellhead except, possibly, the well-defined cloudiness around the wellhead resulting from the flow of the loose sand and silt particles from the seabed. If the point of emission is high (say 30 to 35 ft above the seafloor) or if the seabed consists of cohesive soils, then such a cloudiness would be unlikely;
9. The vertical velocity component of the plume can be utilized to guide the collector over the plume by installing velocity sensors inside the collector;
10. The change in nature, size and position of the surface "boil" and fire can be used as an indication of the approach of the collector over the wellhead during the deployment of the collector;
11. It is a common knowledge that the Ixtoc I wellhead had been located accurately. The immobility of the structure supporting the Sombrero (due to its fixicity) and the tilt of the BOP caused the collector to be off center.

The Proposed Method

Based on the foregoing statements and premises it is believed that the collector can be positioned accurately over the plume. The proposed systems and procedures are described below.

The proposed system consists of a combination of an Acoustic Position Reference System (APRS) working in the Long Baseline (LBS) mode, and

an ROV with sonar used for positioning the collector. It is also suggested that the positioning system be tied into an automatic station keeping system on the vessel such as Honeywell's ASK* system.

The ROV would provide a means of verifying the location of the wellhead through the use of sonar or video depending on the bottom conditions encountered. The ROV could also be used to place reference grid transponders for the LBS and to aid in interrogating the grid if there is a problem with the acoustic transmission resulting from the plume.

Automatic Station Keeping would provide surface vessel position control via the subsea reference grid or a surface reference system in the radar or microwave bands. The surface reference approach would eliminate vessel positioning errors due to acoustic transmission problems caused by the plume. The LBS acoustic grid would then provide information on the position of the collector relative to the wellhead/plume to aid in guiding the collector.

A brief description of the positioning system and step-by-step technique to achieve placement over the plume is given later.

*"ASK" is a registered trademark of Honeywell.

The known coordinates of the wellhead will be used as the reference points in the global reference system. This approach would avoid having to place a transponder on the wellhead itself and the problems associated with the bubble plume. The vessel position reference with respect to the wellhead can be established outside of the blowout region (say a 1,000 feet away).

It should be noted that trying to operate acoustic systems in a highly aerated water environment can cause severe problems. However, it is possible to work around these problems - especially closer to the seabed where the aeration would be confined to the plume.

The scenario outlined below is one possible approach. It is based on the assumption that all the systems can be operated above the acoustic frequency of the blowout plume. Although this assumption is not directly supported by experience, it is surmised that the major frequency will be low and the gas will cause significant attenuations. This will allow operation of the APRS outside just a few hundred feet radius.

In developing the proposed approach certain assumptions (in addition to the limitations and positive aspects listed earlier) have been made:

1. The plume is well defined and has a circular spread (or diameter) between 16 to 40 percent of the height above the point of discharge;
2. The meandering effect of the plume close to the wellhead is insignificant, or practically uniform, in all directions;
3. Acoustics will not penetrate directional energy through the aerated environment. There will be attenuations of 100 db/ft or more at the normal positioning frequencies;
4. Operating outside of plume should cause no problems;
5. The plume could generate some very low frequency, high energy rumble. However, at the frequencies used for positioning systems, between 15 kHz to 30 kHz, the gas bubbles should totally absorb radiated energy within the plume. The acoustic ranging should work well in the vicinity of the blowout, provided it does not "look" through the plume;
6. When placing the collector over the blowout, the gas escaping around the cone could cause poor operation if trying to make acoustic measurements from the cone. At offsets it would work fine;
7. The vessel and its support spread is already on location but not spread-moored.

3.6.8.2 System Configuration

The approach outlined here would minimize acoustic risk while providing high degree of success.

1. Use a surface navigation system (such as ARTEMIS Mark III) fix the vessel position. This is a part of the APRS or the DP system, and is input to acoustic positioning system using Honeywell's RS906 or equivalent. A survey vessel or an MSV equipped with all the survey gear should be used for positioning purposes.
2. Set local LBS grid (See Fig. 3.6-45).
3. Get a fix on each transponder relative to the earth.
4. Calibrate the transponder grid.

It would not be necessary to get close to the plume to survey the grid. An ROV could go around at a constant depth to solve surface acoustic problems.

5. Using an ROV, go to the blowout site and establish precisely the blowout's coordinates. This could be done with several techniques.
   a. Video and LBS
   b. Side Scanning Sonar and LBS
   c. Search Sonar and LBS
6. Input the confirmed coordinates of the wellhead into the APRS computer, instructing it to fix the center of the grid at the coordinates of the wellhead. The display will be automatically modified showing the vessel and the transponder grid referenced to the wellhead in the center. If an ROV is deployed with an interrogator/hydrophone mounted on it, its relative position will also be displayed. An example is shown in Fig. 3.6-47 to 50 in which:
   LO is the wellhead,
   L_1, L_2, L_3 and L_4 are transponders,
   V is the vessel,
   S is the ROV, and
   26 and 27 indicate the alignment of the collector.

Note: All the displays can be in the graphic form, rather than a "spot", for easy interpretation.

7. Offset tanker and drop anchors with lines tied to the collector assembly as shown in Figure 3.6-46.
8. Survey anchors with an ROV or have repeaters on anchors so that they are self-calibrating.
9. Lower collector in to the predetermined height offset from the well.
10. The interrogator/hydrophone can be placed on the collector, on an ROV or on both. If it is on an ROV, the ROV can go up against the collector and get a fix.
11. Keep the anchor lines taut, and monitor the position as the collector approaches the blowout.
12. Use anchor winching algorithms to precisely predict required anchor line changes to position the collector.
13. Move the collector in small steps, say 10 feet at a time, and verify precise maneuvers with the acoustic tracking system.
14. One foot resolution in the predicted versus actual motion should be readily attained.
15. On the last move, when starting from a distance about one collector diameter from the wellhead blowout, it will be easy to place the bell within one foot of the desired location.
16. Make final move maintaining forward tension.
17. At the completion of the move both the collector and vessel should move forward one diameter.
18. Lower the collector over the blowout.

If preferred, a third anchor can be placed forward of the wellhead and the collector can be moved into position under positive constant tension.

The whole process can be performed without ever having to operate acoustics through or near the aerated plume.

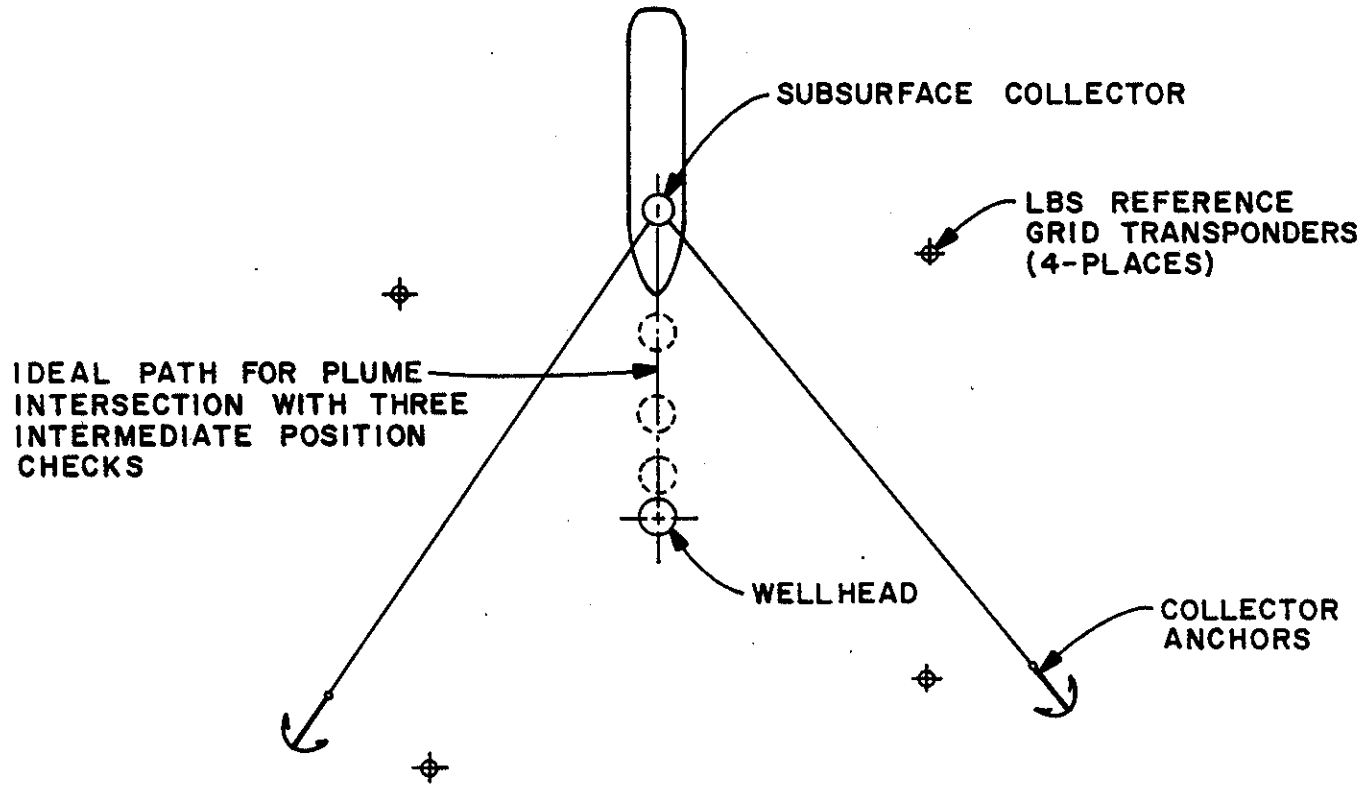

U.S. DEPARTMENT OF THE INTERIOR
MINERALS MANAGEMENT SERVICE

Brown & Root Development, Inc.
HOUSTON, TEXAS

SCALE: NONE	TITLE OF DRAWING: COLLECTOR POSITIONING WITH ANCHOR WINCHING ALGORITHMS
DRAWN BY: A. FOX DATE 8-2-85	
CHECKED BY: ANLS DATE 8-20-85	
APPROVED: EEB DATE 8-20-85	
CUSTOMER APPROVAL	CONTRACT NUMBER XC-0030 / DRAWING NUMBER FIGURE 3.6-46

ALTERNATE NO. 1

Using the same APRS described above, the relative position of the vessel with repsect to the wellhead is established. A high frequency scanning sonar (such as Mesotech Model 971) with compass is installed on an ROV. The ROV, operated from a separate vessel and tracked by the main vessel is flown around the wellhead. The sonar should pick-up the plume either as an object, or as a "black hole" if the sonar beam is attenuated by the plume, and produce a signature on the display screen. A cursor is now fixed over the plume signature. The compass will give the range and the bearing of the plume (Fig. 3.6-51).

When the collector, fitted with another sonar unit, is lowered towards the seabed as before, another signature of the plume is seen on the display screen. When the collector nears the bottom, it is maneuvered horizontally as well as vertically to confirm and focus its display. A fan-shaped 30° beam sonar head that gives better resolution and covers larger areas than other heads should be used. Now the cursor can be moved over to this plume signature. The ROV is moved closer to the collector until a signature of the collector is seen. Since the ROV is operated off another vessel, its range and bearing would have to be transmitted via radio to the main vessel, and the data would have to be manually entered into the computer/processor. The RF link for automatic data transfer may not be cost effective. As an alternative, the second sonar could also be operated from the main vessel and have both sonars interlinked through hardwire connection. In this case, the second sonar would be mounted on a tripod frame and lowered to the seabed from the main vessel (to provide an other fixed point reference). After the collector and the plume are brought within the viewing range of this sonar, a second cursor is fixed on the collector. The ranges and bearings of both cursors are now obtained from a fixed point. When the collector is moved towards the plume the two cursors will be seen to converge on each other, and when they overlap, it could be interpreted that the collector is over the wellhead.

There are other ways to get the added assurance:

1. A software package is available to go with the Mesotech sonars which generates a 3-dimensional picture of the object with range and bearing. This can identify the object the sonar is looking at;
2. Video cameras mounted on the collector, the ROV or the tripod frame can verify the position of the collector and the wellhead (if there is some visibility);
3. The collector can be fitted with velocity sensors which can be used to centralize the collector over the plume.

Advantages of the Sonar

1. The sonar does not require an active target such as a pinger;
2. Due to hard wire transmission of the image picked up by the sonar, the gas bubbles do not affect its functioning and performance;
3. If the acoustic beam from the sonar is reflected by the plume, the image of the reflecting object will be displayed. If the beam is attenuated completely or partially, the display will probably show a "black-hole" signifying the plume. The compass may not give the range in this case, but it would still give the bearing. Thus, in either case some sort of sonar image of the plume can be expected.
4. The sonar system is relatively inexpensive, easy to operate, and does not require long time for set-up and calibration.

The Long-Baseline APRS as described earlier has the following features:

1. Configuration
   - o Minimum of three transponders
   - o System determines position by measuring slant ranges to three or more transponders with known relative positions to each other and a subsea reference point
   - o Proven performance

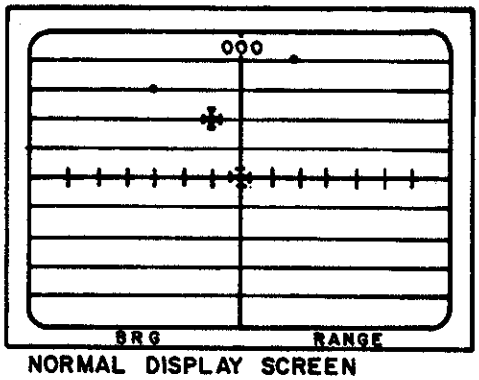

NORMAL DISPLAY SCREEN

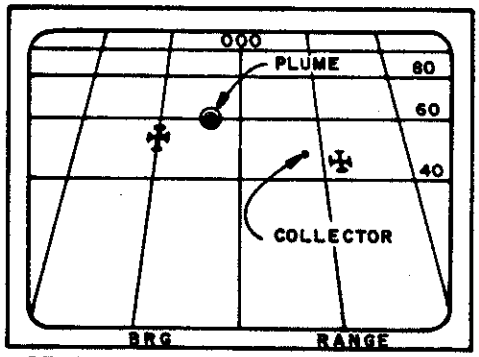

PERSPECTIVE MODE: UNDERWATER EQUIVALENT OF PHOTO. IDEAL FOR PILOTAGE WITH AN ARRESTING REALISM.

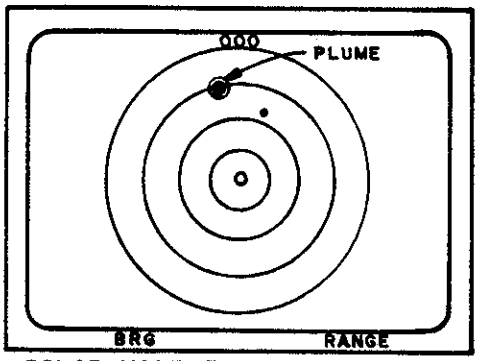

POLAR MODE: EFFECTIVELY A PLAN VIEW. EQUIVALENT TO A RADAR DISPLAY. GENERAL SURVEILLANCE SITE CLEARANCE AND GENERAL SEARCH MODE.

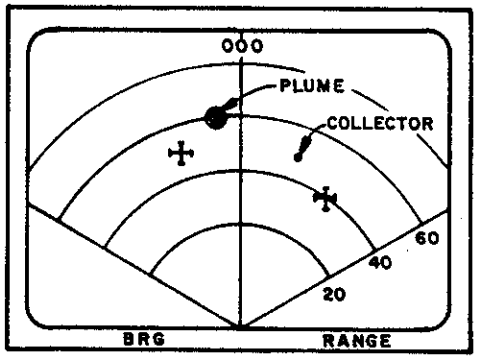

SECTOR MODE: GOOD FOR CONTROLLING ENGINEERING, AND DIRECTED SEARCHES.

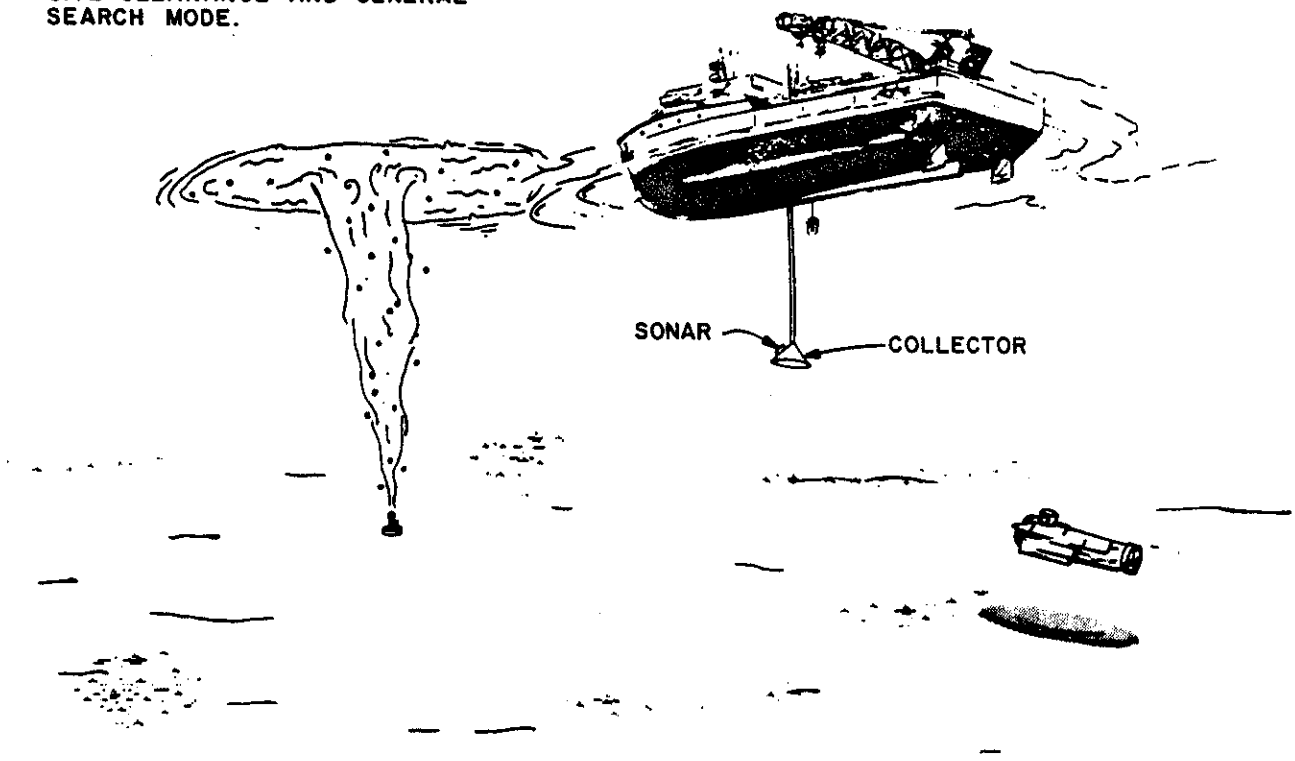

U.S. DEPARTMENT OF THE INTERIOR
MINERALS MANAGEMENT SERVICE

Brown & Root Development, Inc.
HOUSTON, TEXAS

SCALE: NONE	TITLE OF DRAWING: TYPICAL SONAR SEARCH AND DISPLAY MODES
DRAWN BY: RV DATE: 8-15-85	
CHECKED BY: ANLS DATE: 8-20-85	
APPROVED: EEB DATE: 8-20-85	
CUSTOMER APPROVAL	CONTRACT NUMBER: XC-0030
	DRAWING NUMBER: FIGURE 3.6-51

2. Advantages relative to short baseline
   - o Higher accuracy over long ranges
   - o Large area coverage
   - o Accuracy not significantly affected by depth
   - o Long transponder operating life
3. Disadvantages
   - o Large number of beacons required
   - o Time-consuming transponder calibration required

The Reliability Factor

The approach that one takes to system reliability is to define the failure that is considered critical to the operation, such as loss of vessel position control and the confidence level needed for failure-free operations in a given operational environment. Then, the system is designed to function within the prescribed limits. Every system is unique in terms of overall installation and application. So to provide reliability numbers for an element of the system would not provide a valid answer for a general concern. There is enough confidence that the proven automatic station keeping system will maintain vessel position for a given set of environmental conditions with any level of reliability desired. If it can be determined what the acoustic environment is around the plume, the confidence in the APRS can be improved.

Conclusion

It is believed that either of the two methods (the APRS or the sonar) can precisely locate the wellhead.

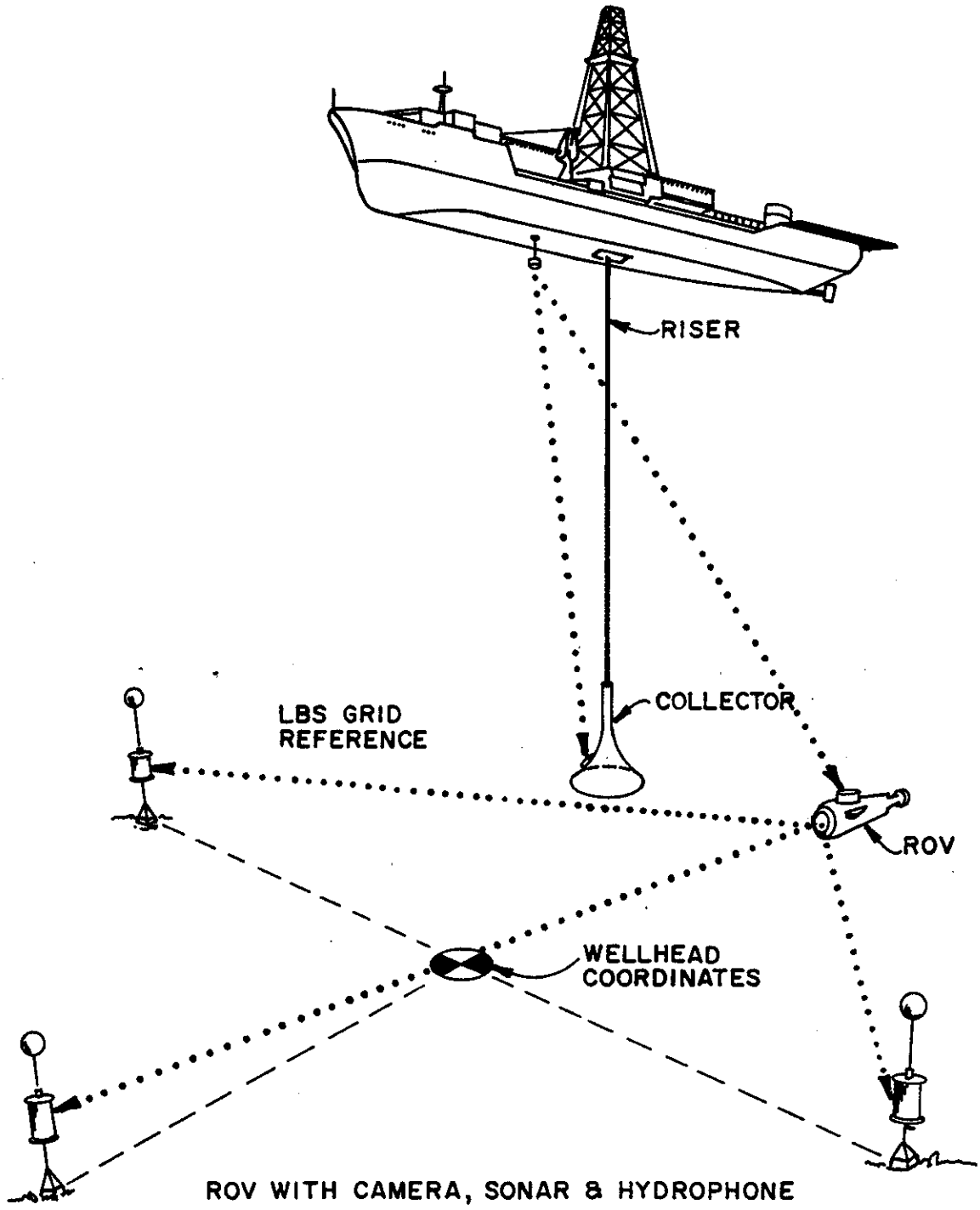

ROV WITH CAMERA, SONAR & HYDROPHONE
COLLECTOR WITH SONAR, HYDROPHONE & VELOCITY SENSORS

U.S. DEPARTMENT OF THE INTERIOR
MINERALS MANAGEMENT SERVICE

Brown & Root Development, Inc.
HOUSTON, TEXAS

SCALE: NONE	TITLE OF DRAWING: ESTABLISHING LOCAL LBS GRID
DRAWN BY: R. VYBIRAL DATE 8-1-85	
CHECKED BY: ANLS DATE 8-20-85	
APPROVED: EEP DATE 8-20-85	
CUSTOMER APPROVAL	CONTRACT NUMBER XC-0030 / DRAWING NUMBER FIGURE 3.6-45

1837

SECTION 3.7

SYSTEM EVALUATION

FINAL REPORT

0341X

3.7 System Evaluation

3.7.1 Concept Practicality and Workability

For the concept to be both a practical and a workable solution to the problem, the solution concept must be survivable in the presence of fire resulting from combustion of the spilled hydrocarbons floating on the seawater surface. Provision, without apparent restriction, for protection of the personnel and the concept collection tanker from the hazard of fire is discussed in Section 3.2.

The flexibility of the concept system to adapt existing proven technology to the application is a second primary criteria for evaluating the practicality of the solution. The use of flexible pipe as a collection riser is discussed in Section 3.4 as well as the product swivel to be attached at the top of the riser. The collection cone attached at the base is discussed in Section 3.3. Finally, the positioning system required for locating the collector over the blowout plume is discussed in Section 3.6. The report documents the fact that these components already exist. All that remains is to adapt these key components for the intended service.

3.7.2 Effectiveness

Once the collection tanker system has been built and is ready for service it is predicted that a maximum of two weeks are required before its arrival at the blowout site. It is assumed that the collection tanker will have been based within reasonable steaming distance of the blowout location, i.e. for instance, a West Coast based collection tanker would respond to a West Coast blowout situation. The two weeks should adequately allow for the preliminary situation survey at the site, the mobilization of a full complement of personnel, taking on a full load of supplies, and travel time to the site.

3.7.3 System Integration

Every aspect of the blowout collection system has been designed or selected taking into consideration its respective interface and integration with the standard onboard operating systems of the collection tanker. The impact on the collection tanker's service systems by the addition of the spill collection system is discussed in Section 3.2. The integration of the operation of the collection tanker with the operation of the collection system is discussed in Section 3.6.

In summary, the concept described in this report meets the requirements.

3.7.4 Operational Elements

The operation of each service system (i.e., electrical, air-conditioning, life support, lightering, abandonment, positioning, etc.) of the collection tanker concept is discussed in Section 3.2.

3.7.5 Limitations

The occurence of a blowout in shallow water (less than 200 ft. water depth) could have significant impact on system collection efficiency and overall performance. Shallow depths could necessitate positioning the collection tanker in the fire. Also should the plume begin wandering, the collection tanker could experience restriction in its ability to maintain position over the plume and/or maintain the personnel quarters at a remote distance from the fire.

3.7.6 New vs. Existing Systems

There are no existing ship-mounted subsurface collection systems.

3.7.7 Optional Features

The adaptability of this concept for other marine hydrocarbon production operations (i.e., floating production system, extended well testing, etc.) has not been addressed in this report. This subject is discussed further however in Section 5.2.

Tab

4.0

SECTION 4.0
SYSTEM COST ANALYSIS (TASK 2B)
FINAL REPORT
SHIP-MOUNTED SUBSURFACE
COLLECTOR SYSTEM
CONTRACT NO. 14-12-0001-30135

4.0 SYSTEM COST ANALYSIS (TASK 2B)

4.1 Existing Collection Systems

4.1.1 Surface Collection Cost Basis

Cost of the cleanup and impact of oil spills varies widely. Weather, slick trajectory, impacted environment and a number of other factors determine the total cost of a spill. For a particular area, the best estimate is made from a probabilistic model. The program SLIKTRAK was developed for this purpose for the North Sea.

Given that costs for responding to oil spills vary widely from incident to incident, a rough analysis based on assumptions corresponding to 'typical' conditions can be useful as a basis for comparison.

To get an idea of the scale of response, consider the following scenario:

- 30,000 bbl/day blowout
- less 40% evaporation loss
- x 5 emulsion formation (80% water)
  = 90,000 bbl emulsion/day

If this slick were uniformly spread to a thickness of 2 mm and remained continuous, then 7.7 (10^7) ft^2 (or 1770 acres) would be contaminated each day. In reality, a spill remains continuous for a limited time, depending on the sea conditions, before breaking up into patches and windrows that effect a much greater area.

One strategy for responding to a large offshore spill is to use mechanical recovery devices in the immediate vicinity of the blowout where the slick is still fairly continuous, chemically disperse oil that escapes the skimming area and then clean up and remove the remaining oil as it strands onshore. (The

assumptions have been made that regulatory approval for dispersant use will be granted and that the slick's trajectory is towards shore.) Skimming and dispersant spraying are limited to a single pass as multiple passes produce diminished results.

As discussed previously, most large offshore skimmer oil recovery is primarily limited by pumping capacity. When pumping a viscous emulsion, a good rate for present skimmers would be 350 GPM. This is not to imply that the skimmer would have a recovery rate of 350 GPM, as free water would be picked up with the oil. The amount of free water will increase as the sea state increases. For comparison purposes, an overall recovery efficiency can be calculated by multiplying the occurrence probabilities for seas and weighted recovery efficiencies at various sea states:

A	B	C	B C
		Recovery	Weighted
Sea State	Occurence[6]	Efficiency	Efficiency
0-2	40%	70%	28%
3	25%	35%	8.75%
4	20%	15%	3%
5	15%	0	0
			40% Overall Efficiency

Skimming operations are not usually conducted at night, and so recovery is limited to about a 12 hour day. Not all of this time will be spent skimming: offloading, maneuvering, and performing repairs will reduce the skimmer's availability by about 50%.

Taking these factors into account yields a recovery rate of 1200 barrels/day per skimmer. Since a large skimmer with a sweep width of 300 feet will encounter about 6500 barrels/day, given the previous assumptions, fourteen such skimmers would be needed for the 90,000 bbl/day spill. Note that it would be very difficult to mount this size response due to equipment availability. The amount of equipment is available on paper, but key items such as the skimmers are committed to a particular area as current industry practice.

The 73,000 barrels/day of emulsion left unskimmed would then be treated with dispersants. The slick will be discontinuous, making efficient dispersant application difficult. Dispersant must be applied directly to oil; any dispersant that lands on the water is lost. The swath width of dispersant sprayed from a large airplane can be as much as 150 meters [110]. Thus treatment of patches or windrows smaller than this size will result in lessened efficiency.

A DC-4 aircraft operating 170 miles from its base can apply 12,000 gallons of dispersant in a 10 hour day [111]. Allowing for a 10:1 oil/chemical ratio, 14,600 barrels of oil need to be treated per day. This implies that about 5 aircrafts would be needed to apply 1,460 barrels of dispersant per day.

Assuming a 50% placement efficiency of the dispersant, 36,500 barrels of emulsion would be untreated and would impact the shore.

4.1.2 Surface Collection Costs, [112]

Skimming

14 Large sweep skimmers[a]	$4,200,000	+ $16,800/day
14 Offshore supply vessels[b]	156,800	+ 39,200/day
17 Open ocean tugs (1000 HP)[c]		38,250/day
2 Spotter planes		6,000/day

70 Skimmer roustabouts		20,790/day
3 Ocean-service barges[d]	60,000 +	6,000/day
Recovered emulsion disposal[e]		211,680/day
Mobilization (trucking, crane service, etc.)	56,000	
	$4,472,800 +	$338,720/day

a) Fixed cost allows for skimmer replacement at the end of the operation. Large sweep skimmers are generally not restorable after extended use. Operating cost is a use fee typical of a large oil spill cooperative.

b) One offshore supply vessel is needed to tow each large sweep skimmer. The fixed cost is allowing for a four day vessel mobilization. Daily operating cost includes fuel usage for low speed maneuvering.

c) One tug is used to tow each skimmer; the three extra tugs are for barge transport.

d) Fixed cost allows for barge cleaning at the end of operations.

e) After 6 hours exposure to the atmosphere, crude oil has weathered beyond reclamation and thus must be disposed rather than refined. Disposal costs can vary widely depending on solids and water content of the particular emulsion. Disposal companies base charges on an analysis of the actual product.

The above analysis indicates that a major expense is for disposal of the recovered fluid. If emulsion breakers were used and the freed seawater disposed at sea, then disposal costs could be reduced about 50%. Applied at a 0.5% dosage, the emulsion breaker would cost $63,500/day and disposal of the oil phase will be decreased to $42,500/day. Note that regulatory permission would be required for disposal of the seawater even though about 99% of an emulsion breaker remains with the oil phase.

4.1.3 Surface Dispersant Application

5 Aircraft	$200,000 + $ 85,000/day
Dispersant	600,000/day
2 Spotter Planes	6,000/day
	$200,000 + $691,000/day

4.1.4 Shoreline Cleanup

Dependent upon the magnitude of the spill and the respective shoreline cleanup response effort it is recommended that an average shoreline cleanup cost of $1,850/bbl be utilized for estimating purposes.

Shoreline cleaning costs vary widely over the particular environments impacted. On a per barrel basis, shoreline cleanup is about an order of magnitude more expensive than skimming. Sensitive areas such as mud flats or mangrove stands are harmed significantly by the cleanup operation itself. These environments provide one of the most convincing arguments for offshore response to oil spill as damage cannot be mitigated once the area is impacted. Other, less sensitive areas such as sandy, high energy surf beaches, may be left to be cleaned by natural processes without lasting damage.

4.1.5 Conclusions

While the preceding cost analysis is very generalized and encompasses numerous assumptions, some conclusions may be drawn:

1. Costs for responding to a major oil spill resulting from an offshore blowout can easily exceed several million dollars per day. Damage claims ranging in the tens of millions of dollars may also be expected.
2. Even assuming an all out effort utilizing massive levels of equipment, a significant portion of a spill can be expected to escape treatment and eventually make landfall. Beach cleaning costs are relatively high, and many sensitive areas are not cleanable without causing additional damage.

4.2 Ship Mounted Subsurface Collector System

4.2.1 Costs for Representative Tankers

TABLE 4.2-1

REPRESENTATIVE LIST OF USED TANKERS FOR SALE OR SOLD
(COURTESY W. P. SAVER COMPANY)

Year Built	Deadweight	Asking Price U.S. $ x 10^6
1974	260,158	7.0
1974	144,000	6.5
1975	285,400	8.0
1975	235,653	7.0
1975	138,700	6.2
1975	137,160	12.0
1975	302,000	9.0
1976	236,465	6.2
1976	390,347	7.5
1976	130,000	7.0
1977	351,400	9.0

DEADWEIGHT = Cargo Capacity in Long Tons Before Conversion, 1 Long Ton Crude Oil = 7 Barrels (approx.)

4.2.2 Costs for Typical Tanker Conversion
(Shipyard Costs and Materials Only)

ITEM	COST U. S. $ x 10^6
Used Tanker, About 130,000 DWT Delivered to U. S. (from Table 4.2-1)	8.0
General Repairs, Survey Requirements Machinery Inspection Etc.	1.5
Thruster, 4 @ 4000 H.P., Installed	5.0
Thruster Compartments, Structural, Access, Ventilation Etc.	1.6
Turret	2.5
Mooring Winches (6)	6.0
Ship Modifications for Turret	3.2
Collector Anchoring Winches (4)	0.6
Helideck	0.5
Covered Walkways	0.2
Cargo & Ballast Piping Modifications	0.5
Accomodation Modifications	0.1
Riser Storage Troughs	0.2
Riser Guide	0.1
Riser Pulling Winch Incl. Wire (1)	0.2
Riser Hold Back Winch Incl. Wire (1)	1.0
Collector Locking & Counterfit System	0.2
Load Winch (1) w/wire	0.9
Riser Handling Winch Incl. Wire (2)	0.8
Gantry	1.0
Ventilation Modifications	0.1
Tank Venting System	0.2
Covered Lifeboats, Davits Etc.	0.5
Citadel	0.2
Water Spray System	0.2

Fire Monitors & Controls	0.3
Monitoring, Data Acquisition Etc.	0.2
Pump Control Modifications	0.1
Diesel Generator Module With Generators	7.0
Export Hose & Reel	1.5
Hydraulic Equipment Module	1.5
Control Room, Consoles Etc.	0.7
Gas Detection System	0.2
Crawler Cranes (4)	3.0
Miscellaneous	1.0
Total Ship Excluding Process Equipment, Riser & Collector and Engineering	50.8

4.2.3 Cost of Ship Mounted Process System

An estimate of the installed cost of the ship-mounted process equipment has been done according to the following formula.

1. Estimate cost of major equipment.
2. Use major equipment cost x 2.5 to get total installed cost.
3. Add 100% contingency.
4. Split installed cost as:
   - Major Equipment - 60%
   - Piping - 15%
   - Instrumentation - 15%
   - Electrical - 10%

Other General Notes

1. No safety equipment is included.
2. Lightering equipment is assumed to be handled elsewhere.
3. Existing tankage will be used for water treating.
4. No buildings or power generation is included.
5. It has been assumed that compressed air for instrumentation is available from the ships own supply.

EQUIPMENT	SIZE	ESTIMATED COST
Degassing Tank	21.5' Ø x 80'-0"	$100,000
Primary Separator	21,5' Ø x 80'-0"	$100,000
Flare Knock-Out	7' Ø x 20'-0"	$ 25,000
Flare		$ 60,000
	TOTAL =	$285,000

Total Installed Cost	= $ 712,500
Contingency (100%)	= $ 712,500
Total Cost of Process System	= $1,425,000

4.2.4 Costs for Chemicals for Emulsion and Water Treatment

Three basic types of treating chemicals may be required to successfully separate the oil and water and then to disperse any unseparated oil as the treated water is dumped into the sea.

CHEMICAL	TRETOLITE'S CODE NO	COST/GAL	EST. DAILY USAGE
Demulsifier	RP-4	$10	84 GPD
Reverse Emulsion Breaker	JW-8206	11	420 GPD
Dispersant	W-1439	12	340 GPD

These requirements are based on Tretolite's estimates for Ixtoc I.

4.2.5 Cost Estimate of Subsurface Collector

4.2.5.1 Subsurface Collector

For cost estimating, the subsurface collector is taken to include:

1. The structures consisting of outer and inner cones along with necessary stiffening.

2. The diverter valves (2) with remote actuators.

The collector is assumed to have a dry weight of approximately 40 short tons. The fabrication cost can vary between $3,000 to $5,000 per ton depending upon total weight, size, the fabricator and its location. Therefore, the average figure of $4,000 per ton has been used.

Total Cost of 40 ton collector	= $160,000
Diverter valves with actuators	= $ 40,000
Total Cost of Subsurface Collector	= $200,000

The table below shows estimated costs of the collector for different weights.

Weight	Total Cost
20 Tons	$140,000
25 Tons	$165,000
30 Tons	$175,000
35 Tons	$195,000
45 Tons	$220,000
50 Tons	$240,000
60 Tons	$265,000

4.2.5.2 Well Locating and Positioning System

System component description/identification and prices (see Note on pp. 4-13):

1A. Survey: Acoustic Position Reference System (APRS) consisting of;

One Honeywell Model RS/906 providing the following capabilities;

- Long Baseline Operation:
  - oo Solutions with three or four transponder arrays
  - oo Submersible-mode operations, for use with a reinterrogation transponder on the submersible

- o Software to perform velocity and grid calibrations to imporve overall system performance.
- o Operation and maintenance manuals, installation and interface drawings.

Total budgetary price, Item 1A $500,000

1B Remote Hydrohone/Projector $ 20,000

1C Subsea Hardware for Operation with RS/906

- o Quantity 4, Command Release Transponders
- o Quantity 4, Flotation Collars for Above Transponders

Total budgetary price, Item 1C $ 35,000

2. Dual Scanning Sonar System, consisting of Mesotech Model 971-1 Option 2 Sonar head, Processor, Display, Cables, connectors, Magnetic compass, accessories, RGB monitor, Image Processing software, and operator's manual.

Total budgetary price, Item 2 $ 80,000

3. Video System, consisting of underwater cameras, processor, cables and connectors:

Total budgetary price, Item 3 $ 75,000

4. Velocity sensors, consisting of probes, processors, various options (non-standard time constant, special meter range, special output signal, low-velocity capability, sensor proximity option, surface readout, angle/magnitude option, pressure transducer, water temperature sensor), extra cables and connectors, and instructions manuals, Marsh-McBirney Model 551 (underwater package).

4.2.6.4 Cost of Collection Riser

Cost of Flexible Riser	=	$ 800,000
Cost of Product Swivel	=	$2,000,000
Cost of Riser Tensioner	=	$ 750,000
Total Cost of Collection Riser	=	$3,550,000

4.2.7 Qualifications

1. All cost estimates are in 1985 U. S. Dollars. No provision has been made for cost escalation.
2. All cost estimates presented are of order of magnitude type. They are intended to be budgetary type estmates and do not represent formal quotes or commitments from any vendors.
3. Cost estimates presented reflect current industry conditions and may vary from actual cost incurred. In particular, this applies to the vessel cost which may vary considerably depending on the market situation, size, age, and the registry.
4. Some allowance has been made for cost variations in labor as well as hardware depending upon the geographical location and manufacturer.
5. No consideration has been given to the time value of money. The timing of expenditures can have an effect on the true total cost of the installation.

4.2.8 Total Capital Cost of Ship-Mounted Subsurface Collector System

4.2.8.1	Total Cost of Ship Excluding Process Equipment, Riser & Collector (Reference 4.2.2)	$50,800,000
4.2.8.2	Total Cost of Process System (Reference 4.2.3) Excluding Costs for Chemical Treatment (Reference 4.2.4)	1,425,000

4.2.8.3	Total Cost of Subsurface Collector (Reference 4.2.5.1)	200,000
4.2.8.4	Total Cost of Well Locating and Positioning System (Reference 4.2.5.2)	785,000
4.2.8.5	Total Cost of Remote Anchor Release System (Reference 4.2.5.3)	600,000
4.2.8.6	Total Cost of Collection Riser (Reference 4.2.6.4)	3,550,000
4.2.8.7	Engineering and Detailed Design Estimated @ 2.5% of system cost sub-total items 4.2.8.1 thru 4.2.8.6	1,434,000
4.2.8.8	Total Capital Cost of Ship-Mounted Subsurface Collector System	$58,794,000

4.2.9 Operating Cost

The cost of every offshore undertaking is situation-dependent. It can and does vary widely, as the influencing factors are many. In case of the ship-mounted subsurface collection system, the estimation of the operating cost is complicated further due to additional factors. The most significant of these factors are:

- o Blowout response experience
- o Wellhead condition
- o Debris around wellhead
- o Weather conditions
- o Location and accessibility to blowout
- o Water depth

- o Blowout characteristics
- o Mobilization and installation time
- o Down time
- o Preparedness and logistics
- o Market conditions for support vessels and services
- o Cost of fuel and chemicals

The estimate of the net cost reduced to a measurable basis, such as Dollars per day or per barrel of recovered oil, is made even more difficult by the following:

- o The size and duration of the blowout
- o System efficiency
- o Precision (or lack of it) in locating and positioning the collector
- o Allowable height of the collector above the wellhead
- o System reliability
- o System performance, especially from the point of view of separation
- o Blowout reservoir characteristics (size, pressure, GOR and type of crude) and its rate of depletion.
- o Frequency of abandonment and its cause
- o Usage fee, or the depreciation rate for the dedicated equipment, depending upon;
  - total capital cost
  - total useful life of system
  - anticipated number of blowout responses during the life of the system
  - alternate uses for cost write-off
  - insurance
  - maintenance cost recovery
  - revenues from the recovered oil

Although none of the factors listed above are known at this time, a representative operating cost estimate can be developed. Also, for the purpose of comparison with the existing spill cleanup technology, a Dollar per day or per barrel cost can be developed on the basis of certain assumed "worst case" parameters.

4.2.9.1 The Cost of Blowout Response

Mobilization and demobilization (total 5 days):

The tanker crew @ $8,400/day	=	$ 43,500
Supplies (galley, hotel, and other consumables)	=	7,000
Transit fuel etc.	=	17,000
Rigging, equipment and misc.	=	30,000
Port and harbor clearance	=	20,000
Support vessels and services:		
1 MSV (including diving spread, survey and fire fighting)	=	150,000*
2 Tugs (7,500 HP each)	=	70,000
1 Shuttle Tanker	=	50,000*
ROV support	=	5,000*
Spares, chemicals, etc	=	225,000
1 Helicopter	=	12,500*
Shore-based Support	=	20,000
Main tanker and Shuttle Tanker cleaning	=	200,000
Total	=	$850,000

*These costs are based on the assumption that the MSV, the tugs, the ROV support and the helicopter service will be mobilized to get on location to perform surveys, debris removal, and other necessary preparations while the tanker is being mobilized.

4.2.9.2 Deployment and Installation Cost
(assumed to take a total of 7 days)

Table 4.2-2
OPERATING COSTS

Duration	Total Operating Cost	Averaged Daily Cost
20 days	$ 4,200,000	$210,000
40	$ 6,900,000	$172,500
60	$ 9,600,000	$160,000
80	$12,300,000	$153,750
100	$15,000,000	$150,000
120	$17,700,000	$147,500
140	$20,400,00	$145,714

4.2.9.5 Other, Non-Operating Costs

Preventative Maintenance (assuming 7 permanent crew)	= $ 700,000/year
Administrative costs	= $ 250,000/year
Insurance (2.5% of capital cost)	= $1,400,000/year
Dock Fee	= $ 200,000/year
Allowance for repairs or hardware replacements	= $2,800,000/year

4.2.10 Net Cost of Ship-Mounted Subsurface Collector System

Total capital cost	= $58,794,000
Total operating cost	= $ 1,500,000+
Total non-operating costs	= $ 2,800,000
Grand Total	$63,094,000+
	$135,000/day

For the net cost on per day or per barrel (of recovered oil) basis at least two factors must be considered:

1. The duration of collection (assumed at a constant rate of blowout discharge).
2. The net collection efficiency of the system (defined as the amount of oil actually recovered vs. the amount of oil discharged from the blowout).

In absence of specific data, a range of cost numbers can be developed, as in Figure 4.2-3, based on 30,000 BPD flow rate. These costs are based on recovering the total cost of the system during one mobilization.

4.3 Cost Comparison

4.3.1 Surface Collection Costs Summary

In Section 4.1.2 of this report it is estimated that the cost of surface collection and recovered emulsion disposal are of the magnitude of $4,472,800 fixed costs and plus $338,720 per each day of operation. The application of emulsion breakers will reduce it by an estimated amount of $105,680 per day of operations. All of the skimmer equipment capitalization expense is included in the mobilization and fixed costs. All other equipment is considered to be multi-purpose and consequently only a small percentage of the capitalization expense is included in the mobilization cost according to the standard depreciation schedule.

The weighted average overall collection efficiency to be realized from the application of the surface collection technique is on the order of 20% or less when consideration is given to the probability of the occurrence of a given sea state and the respective collection efficiency. Evaporation and burning losses are not included in this number.

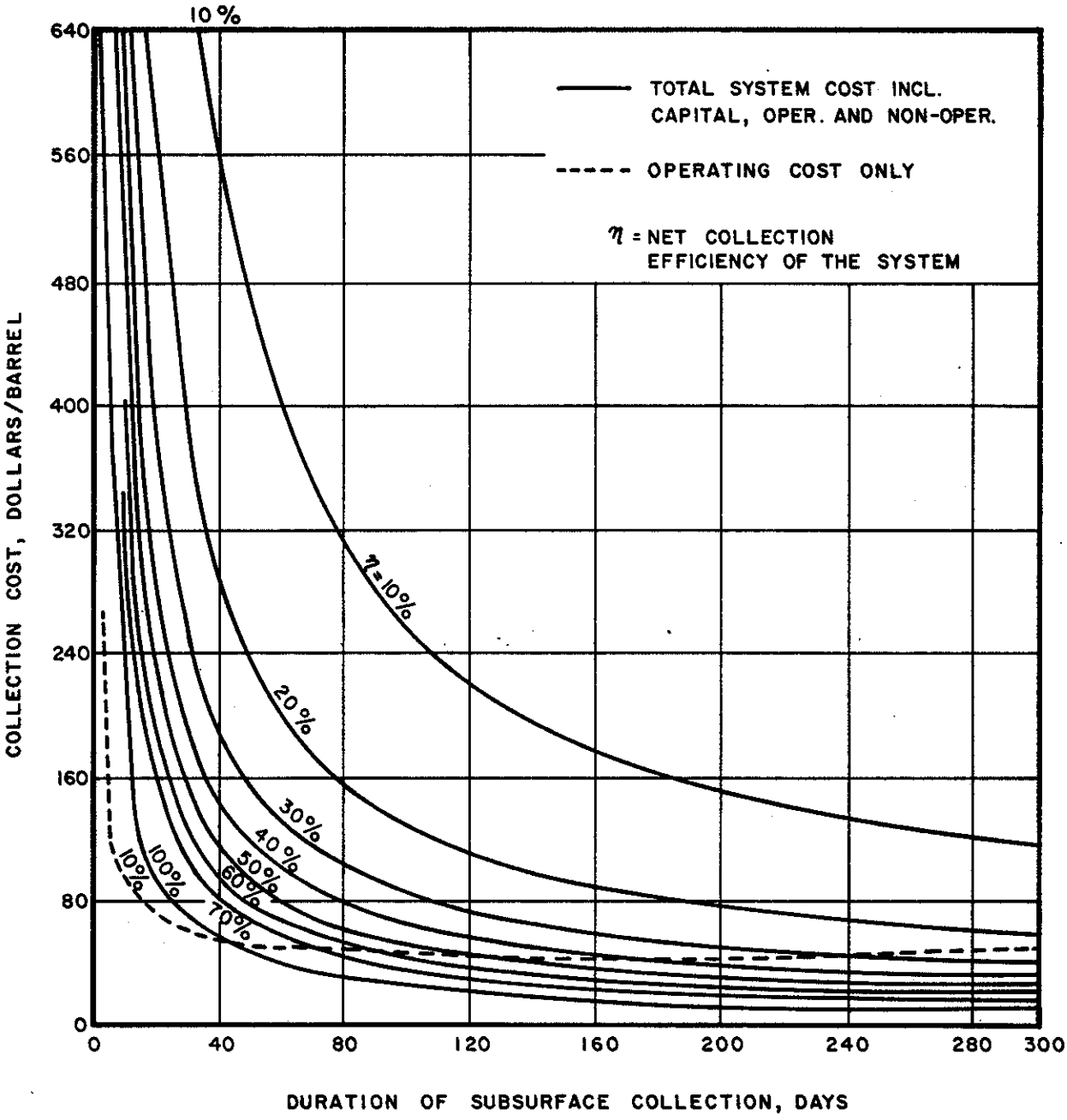

U.S. DEPARTMENT OF THE INTERIOR MINERALS MANAGEMENT SERVICE	SCALE: NONE	TITLE OF DRAWING: UNIT COST OF SUBSURFACE COLLECTION SYSTEM
Brown & Root Development, Inc. HOUSTON, TEXAS	DRAWN BY: A. FOX DATE 9-4-85	
	CHECKED BY: ANLS DATE 9-5-85	
	APPROVED: EEC DATE 9-5-85	
	CUSTOMER APPROVAL	CONTRACT NUMBER XC-0030 / DRAWING NUMBER FIGURE 4.2-3

The cost of surface dispersant application is estimated at $200,000 for the cost of mobilization plus an additional $691,900 per day for operations.

The cost of shoreline cleanup is estimated at $1,850 per barrel.

4.3.2 Subsurface Collection Costs Summary

In Section 4.2.8.8 the total cost of a ship-mounted subsurface collector system is given as $58,794,000. This is the cost in mid-1985 U. S. dollars for the equipment capitalization expense to assemble all components defined in the concept. The operating costs and the net total costs are given in Sections 4.2.9 and 4.2.10.

It can be seen that the cost of chemical treatment (per Section 4.2.4) is insignificant in comparison to the total cost.

4.3.3 Cost Comparison

It is obvious from the details presented in this section that an equitable cost comparison between the two systems can not be made without making some basic assumptions. These assumptions are: that the capital cost of the collection equipment is written off with the first use of the equipment and that to be equitable, the cost comparison between the two systems must be based upon equal values of collection efficiency. We will further assume that the comparison costs are those foreseen to occur as a result of operating each of the two systems in response to a blowout of 30,000 bbls. per day for a 100 day period.

From Section 4.1.1 we know that a blowout of 30,000 bbl/day will yield 90,000 bbl emulsion/day after 40% evaporation loss. Surface skimmers will be able to treat 17,000 bbl/emulsion/day or 3,400 bbl oil/day. This latter volume represents a collection efficiency of 11.3% or 51.3% when including the 40% evaporation loss.

Using dispersants 36,500 bbl emulsion/day of the remaining 73,000 bbl emulsion/day can be treated. This yields an additional 7,300 bbl oil/day or a 24.3% increase in collection efficiency. The combined total value of 75.6% represents the estimated maximum collection efficiency possible through the application of the surface collection method. Using these collection efficiency percentages and the capital and operating costs presented previously, the following cost comparison can be made.

TABLE 4.3-1

COST COMPARISON

Collection Efficiency	Surface Collection Cost Per Bbl of Oil Recovered	Subsurface Collection Cost Per Bbl of Oil Recovered
51.3%	$30.7	$36.7
75.6%	$47.5	$30.5
95%	-	$26.8

Tab

5.0

SECTION 5.0

SUMMARY OF RESULTS

FINAL REPORT

SHIP-MOUNTED SUBSURFACE

COLLECTOR SYSTEM

CONTRACT NO. 14-12-0001-30135

5.0 SUMMARY OF RESULTS

In this section conclusions and recommendations for future work are presented. Conclusions were derived from both the literature survey task and the system analysis and cost estimating tasks. The proposed future work efforts are derived from those areas that have not been fully answered in the present study.

5.1 Conclusions

Several conclusions have been derived from the survey of literature on the subject of subsea collection of oil. The most significant of those are presented below.

Several concepts have been proposed for subsea collection. However the two most likely candidates for collection systems are the "Sombrero" type of cone structure for off-bottom depth collection and a closed seabed system. The latter seabed system requires an extensive amount of pressure control apparatus along with close tolerance positioning and control, all of which is complex, expensive and beyond present technology. This is especially true in the 1000 foot water depths required.

The "Sombrero" cone system appears therefore to be the best candidate for the collector. The shape of this collector does not matter, however as long as the ratio of the collector height or altitude to base dimensions is approximately unity. Collection efficiency is also controlled by a characteristic height above the origin of a blowout. The characteristic height is a function of the Froude number of the flow conditions and is not related to flow rate. The height is also a function of subsea equipment such as a BOP stack associated with the well. The collector must maintain a position above the BOP stack. The hydrodynamics of the blowout discharge is assumed to be based on a buoyant plume model versus a water jet assumption. There are

disagreements by researchers on the plume diameters at the water surface and collection efficiencies of the collector. One reason for the disagreement in efficiencies is the lack of meaningful full scale data. The one full scale test of the Sombrero in 1979 at the IXTOC I blowout did not provide meaningful measurements of efficiencies. Three reasons are cited: (1) the ratio of height to base of the collector caused the entrainment of excessive quantities of gas thereby causing oil to spill out over the edges of the cone; (2) the base of the cone was not aligned with the center of the plume thus it was not situated to recover the maximum amount of oil; and (3) the Sombrero was fixed in its installation and could not be moved to follow the meandering plume.

A sample vertical riser appears to be the best conduit to pass the collected oil and gas to the surface for treatment. Two risers, coupled to a double cone collector to initially separate oil from gas appeared to be the most efficient system concept.

The use of pre-installed collection systems in anticipation of blowout appear to be very expensive and thus impracticable.

No commercial hardware items exist for subsea oil collection. Most systems are assembled from existing parts and hardware to fit a solution. All proposed hardware are state-of-the-art.

The technology for locating blowouts is well known. Floating components exist such as tankers, floating production systems, semisubmersibles. Patents exist on turret moors used in conjunction with tanker systems.

Based on literature survey results and the system design parameters of the contract a proposed solution has been developed through the system analysis effort. An 120,000 DWT tanker is the minimum size to accommodate the 14 days of storage of the collected liquid. The tanker would have a mid-ship

modification to install both a turret and a moonpool. The turret, 72 feet in diameter, would allow the vessel to weathervane while on station. The turret would also house six mooring winches for the six mooring lines used to initially locate the tanker near the blowout. The tanker concept studied is presented conceptually on Figure 5.1-1.

The moonpool would be used to house and then be used to deploy and recover both the collection risers and the collection cone. Four stern mounted, totally controllable, completely azmuthing retractable thrusters would be provided to assist in tanker alignment near the blowout and away from any surface burning operations, up to Beaufort 9 wind conditions.

The tanker would have modified wing walls, ballast tanks to accommodate a salt water storage system in conjunction with a continuous water overflow system to reduce risk of fire damage to the vessel. Walkways would be covered to provide additional personnel protection. Thus the tanker would be designed to safely operate near surface fire areas of a blowout.

The subsea collector would have four mooring lines attached. With the combination of 10 mooring lines in the system composed of six on the tanker and four on the collector, and standard slackening and tensioning operations on the line, the entire system could move in a 550 foot radius around the initial blowout point of origin. Thus meandering blowout plumes could be tracked with the flexible mooring system several workable schemes were proposed to quick disconnect the mooring lines within eight hours.

A dual riser and double cone collector system is proposed. The cone would be 30 feet in diameter 35 feet in height (to accommodate 30 foot BOP stacks) and would be negatively buoyant to maintain location in the blowout plume. In air, the proposed cone weighs 25-30 tons. The risers proposed are flexible pipe

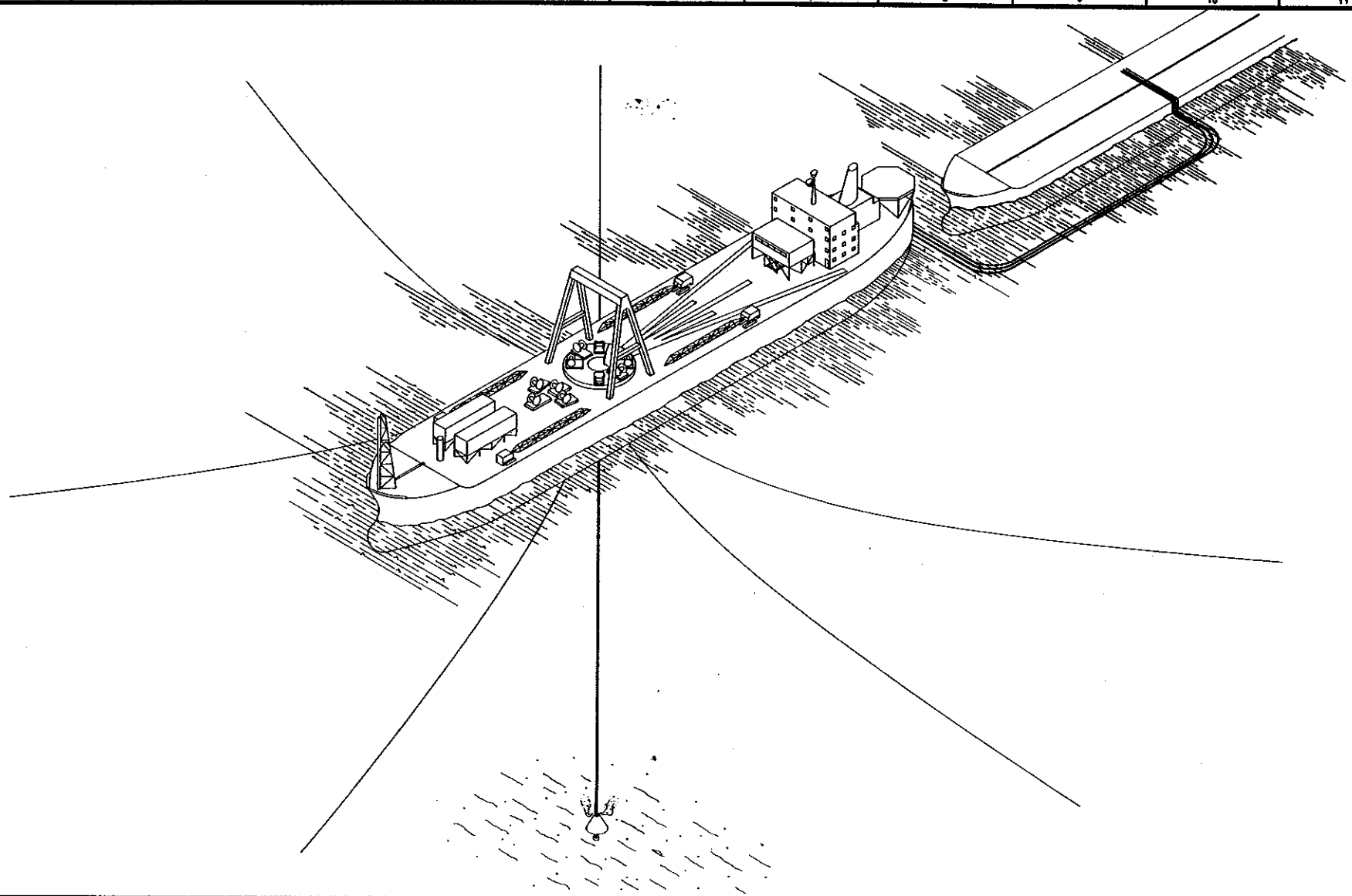

NOTES

REVISIONS	BY	DATE

REVISIONS	BY	DATE

Brown & Root Development, Inc.
BARGE
HOUSTON, TEXAS

DRAWN BY: J. RUDGE
DATE 8-7-85
CHK'D BY: G.H.
DATE 8-9-85
SCALE: NONE

APPROVED 8-10-85
APPROVED

SEAL

TITLE OF DRAWING: SHIP-MOUNTED SUBSURFACE COLLECTOR SYSTEM—CONCEPTUAL CONFIGURATION

NAME OF CLIENT: U.S. DEPARTMENT OF THE INTERIOR
MINERALS MANAGEMENT SERVICE

CONTRACT NO. XC-0030

DRAWING NO. FIGURE 5.1-1

SHEET OF

20 inches in diameter. The risers would be fabricated in spoolpieces of 100 foot, 200 foot and 300 foot lengths to be jointed together in various combinations to accommodate blowouts in 100 foot to 1000 foot water depths. A riser tensioner is included to maintain a constant vertical height of the cone above the blowout within ± 8 feet using a system of hydraulic cylinders and gas accumulators.

The proposed on-board process system uses cold water, gravity settling as the primary separation method with an additional separation system to handle heavy density oil products. No heating is proposed to reduce waxes in the system as the costs would be very high. Similarly, electrostatic separations were not selected because of the low oil to water ratio, less than 2%, of the blowout liquid stream. Recovered gas is disposed by flaring. The recovered gas was rejected as a fuel source for ship operations due to its low pressure of one atmosphere requiring compression and high hydrogen sulfate content requiring further chemical processing and increased costs.

Operating plans were proposed using standard offshore procedures to install, recover, and operate the collector system. A heading of 20-45° to the wind is to be maintained for the tanker to avoid infesting of toxic gas by the crew.

A system evaluation was conducted that demonstrated that the proposed design could survive operations in close proximity to surface fire conditions. Also the evaluation determined that the proposed design was comprised of existing hardware with no new equipment development. The only element that needs to be developed in the concept is a full scale integrated application of existing systems.

A cost analysis was conducted between current surface collection technology and the proposed subsea collection concept. The

details of the cost analysis were presented in Section 4.0. The cost of surface collection was most affected by a combination of volume of treated liquid and duration of operation. The subsurface collection concept costs are proportional to collector efficiency and duration. Total capital costs in 1985 dollars for the subsurface collection system is estimated to be $58,794.000.

A typical scenario was developed to compare the two oil spill collection concepts based on the original work statement requirements, namely a 30,000 bbl/day oil spill, 100 day duration. The surface collection system consisted of surface skimmers and air-deployed dispersants. An assumption was made that 40% of the oil was recovered by evaporation. Comparisons were made between the subsurface collection system and the surface skimmer operation alone and then with the skimmer and dispersant operations. Efficiencies of the subsurface collection system was assumed to be that of the skimmer operations above and then the combination of skimmer and dispersants, namely efficiencies of 51% and 76% respectively.

A third calculation was made on the proposed 95% efficient subsea collector system. Comparisons were made on price per barrel of treated oil. At the 51% efficiency of a skimmer operation the cost of the surface collection operations was $24.7/bbl, and subsurface collection ranged from $36.8 to $50.7/bbl. At the 76% efficiency of skimmer and dispersant operations the surface system cost was $47.5/bbl and subsurface collection ranges from $30.5 to $34.4/bbl. At 95% efficiency for the subsurface collection the cost ranged from $26.8 to $27.4/bbl. The breakeven efficiency value for the subsurface collection concept required to match cost per barrel of surface collection with both skimmers and dispersants ranged from 39.1% to 54.8%. Thus it was concluded that subsea collection systems

operating in excess of 55% efficiency were cost effective. Ranges of values for the subsea collection system reflected the assumption of an additional 40% recovery of oil reached the surface due to a combination of evaporation and burning.

5.2 Future Technology Development

The purposed tanker-mounted subsea collection system is a single solution to the problem. Future studies would be required to develop alternate concepts and improvements to the baseline solution. One alternative would be to assess the flexibility of the collection tanker for use as a Floating Production System (FPS) or for Extended Well Testing (EWT) of exploratory wells. Such adaptability of the concept could improve its marketability and utilization. Included in the flexibility analysis of the tanker to different missions is the use of module systems associated with the collection and on-board processing elements of the concept. Such items could be removed quickly and other mission modules installed on the tanker.

As indicated by the literature review and previous results of laboratory tests, a full scale model at sea is required to determine the ease of installing the collector system into the blowout plume, maintaining the important characteristic height above the well and BOP stack and providing for the relocation of the collector to follow a meandering plume.

Field test data are required of double cone, double riser collection system to determine overall system efficiencies as a function of location relative to the blowout plume and design of the collector. Volumes of entrained water gas accumulation in the cone, liquid/gas ratios, collector geometry are important parameters to be varied in overall collector efficiency studies.

Since a flexible riser is proposed for the double riser part of the collector system, it is proposed that model test be conducted of flexible riser hydrodynamics, structural dynamics and material behavior under varying environmental loading conditions and plume characteristics. In model tests the material strength characteristics values such as Young's modules, strain rate, fatigue strength are also modelled. Thus it is important to consider model scale factors for the composite cross-section of the flexible pipe.

10 References

REFERENCES

REFERENCES

1. U.S.G.S. Conservation Division Open File Report 81-704, Research and Development Program for OCS Oil and Gas Operations Tech. Report, 1981.
2. Technology Assessment and Research Program for Offshore Minerals Operations, 1984 Report, USOCS Report MMS 84-0001
3. Proceedings of the Subsea Containment of Oil Workshop, Institute of Environmental Studies, University of Toronto, Canada, Pub. No. EE-18, 1981.
4. Proceedings of the Second Subsea Containment of Oil Workshop, Oslo, Norway, 1982.
5. German and Milne, "Subsea Blowout Containment System, Concept Analysis"; EPS (Canada) Report EE-37.
6. Det norske Veritas, "Containment of Oil and Gas from a Subsea Blowout, Operational Feasibility;" DnV Report No. 83-5014.
7. Milgram, J. H., "Mean Flow in Round Bubble Plumes"; Journal of Fluid Mech., Vol. 133, pp. 345-376, 1983.
8. Milgram, J. H., "Subsea Collection of Oil from a Blowing Well"; US OCS Report MMS 84-0001.
9. Milgram, J. H., "Subsea Collection of Oil from a Blowing Well"; 1981, USGS Conservation Division Tech Report 1981, pp 71-78, USGS Open File Report 81-704.
10. Milgram, J. H. and Van Houten, R. J., "Plumes from Blowouts and Broken Gas Pipelines"; 1982, M.I.T. Dept. of Ocean Engr Report No. 82-7.
11. Milgram, J. H., "The Collection of Oil From Subsea Well Blowouts"; Proc. of Second Workshop on Subsea Containment of Oil, Oslo, 1982.
12. Burgess, J. J. and Milgram, J. H., "Experiments with Scale Models of Oil Collectors for Subsea Well Blowouts"; Applied Ocean Research, Vol. 5, No. 1, 1983.
13. Milgram, J. H., Von Alt. C; and Burgess, J. J., "Experiments with Scale Models of Oil Collectors for Subsea Well Blowouts - Part 2"; Applied Ocean Research, Vol. 5, No. 3, 1983.

14. Fazal, R., and Milgram, J. H., "The Structure of Gas Liquid Plumes above Blowouts"; Report No. 0380-12, Dept of Ocean Engr, M. I. T. Cambridge MA, 1980.
15. Milgram, J. H., and Burgess, J. J., "Measurements of the Surface Flow Above Round Bubble Plumes"; Applied Ocean Research, Vol. 6, No. 1, 1984.
16. Milgram, J. H. "Measurements of the Flow on a Relatively Large Bubble Plume"; Second Workshop on Subsea Containment of Oil, Oslo, 1982.
17. Milgram, J. H. "Studies of Gas Bubble Plumes Simulating an Oilwell Blowout"; Proc. of Subsea Containment of Oil Workshop, Toronto, 1981.
18. Burgess, J. J., "Subsurface Collectors for Underwater Oilwell Blowouts"; Proc. of Subsea Containment of Oil Workshop, Toronto, 1981.
19. Milgram, J. H., "Field Tests of a Subsea Oil Collection System for a Blowing Well"; U. S. Dept. of Interior Conservation Division Tech. Report, 1983.
20. Milgram, J. H., and Erb, P. R., "How Floaters Respond to Subsea Blowouts"; Petroleum Engineer International, Vol. 56, No. 7, June, 1984.
21. Proc. of the Second AMOP Technical Seminar, 1979, Edmonton, Canada
22. Proc. of the Third AMOP Tech. Seminar, 1980, Edmonton, Canada.
23. Proc. of the Fourth AMOP Tech. Seminar, 1981, Edmonton, Canada.
24. Proc. of the Fifth AMOP Tech. Seminar, 1982, Edmonton, Canada.
25. Topham, D. R., "Some Aspects of Subsea Containment"; 5th AMIP Tech. Seminar, 1982.
26. Topham, D. R., "Gas Hydrates and Their Importance in Oil Well Blowouts in Deep Waters", 3rd AMOP Tech. Seminar, 1980.
27. Topham, D. R., Bishnoi, P.R., and Maini, B.B.; "Laboratory Study of Behavior of Oil and Gas Particles in Salt Water Relating to Deep Oil-Well Blowouts"; 2nd AMOP Tech. Seminar, 1979.
28. Topham, D. R., "The Modelling of Deep Oil-Well Blowout Plumes Including the Effects of Hydrate Formation"; 4th AMOP Tech. Seminar, 1981.

29. Topham, D. R., Gregory, G. A., and Fogarasi, M., "Calculations of the Flow in the Marine Riser Section of a Subsea Oilwell Blowout Collection Device"; 5th AMOP Tech. Seminar, 1982.
30. Rowe, R. D., and Topham, D. R., "The Application of Reduced Scale Tests for a Subsea Containment System to a Hypothetical Blowout Case"; 2nd Subsea Containment of Oil Workshop, Oslo, 1982.
31. Rowe, R. D., "Analysis of Subsea Containment and Free Plume Test"; DSS Contract OSB82-00249, March 1983, Canada (Institute of Ocean Sciences).
32. Topham, D. R., "A Note on the Importance of the Mechanics of Large Scale Bubble Plumes in Modelling Deep Water Oilwell Blowouts"; Subsea Containment of Oil Workshop, Toronto, 1981, Proceedings.
33. Fanneløp, T. K., and Sjoen, K. "Hydrodynamics of Underwater Blowouts"; AIAA, 18th Aerospace Sciences Meeting, Jan. 14-16, 1980, Pasadena, California, AIAA-80-0219.
34. Sjøen, K., "Further Theoretical Modelling of Subsea Gas Blowouts"; Proc. 2nd Subsea Containment of Oil Workshop, Oslo, 1982.
35. Fanneløp, T. K. "Laboratory Experiments with Bubble Plumes"; Proc. 2nd Subsea Containment of Oil Workshop, Oslo, 1982.
36. Sjøen, K., "Norwegian Subsea Blowout Research"; Proc. Subsea Containment of Oil Workshop, Toronto, 1981.
37. Teigen, P. S., "Model Investigation of a Bell Shaped Structure for Control of Underwater Blowouts"; Proc. Subsea Containment of Oil Workshop, Toronto, 1981.
38. Westergaard, R. H., "Underwater Blowout Oil Collection"; 1977 Oil Spill Conference.
39. Westergaard, R. H., "Underwater Blowout"; "Environment International, Vol. 3, pp. 177-184, 1980.
40. Westergaard, R. H., "A Collection Bell which mates a Special Base-plate Receptacle"; Proc. 2nd Subsea Containment of Oil Workshop, Oslo, 1982.
41. Westergaard, R. H., "Countermeasure Developments for Offshore Drilling in the North Sea"; Proc. of Second AMOP Tech. Seminar, 1979.

42. "Offshore Blowout Control"; Report No. STF 88A 81004, Published by OTTER Group, N-7034, Trondheim, Norway.
43. Sandaker, Kjell, "A Concept for Containment of Petroleum from Subsea Wellheads"; Proc. 2nd Subsea Containment of Oil Workshop, Oslo, 1982.
44. Fredrikson, G., Seip, H. M., Westergaard, R. H., and Østby, Morten, "Damage Assessment of Oil Spills from Subsea Blowouts"; Proc. 2nd Subsea Containment of Oil Workshop, Oslo, 1982.
45. Haagensen, K., "Blowout at Seabed from a High and Low Gas/Oil Ratio Reservoir"; Tech. Note, DnV, No. FDIV. 44-83-02; Jan. 1983, Dept. 40, FDIV.
46. Potter, S. G., and Buist, I. A., "Subsea Containment: COOSRA Research Todate"; Proc. 5th AMOP Tech. Seminar, 1982.
47. Fredrikson, G. F. W., "Cost-Benefit Analysis of Oil Pollution Combat Alternatives"; Proc. 5th AMOP Tech. Seminar, 1982.
48. Gainer, J. G., "Subsea Containment: COOSRA Research Todate"; Proc. 2nd Subsea Containment of Oil Workshop, Oslo, 1982.
49. Buist, I. A., "Measured Behavior of an Oil/Gas Plume Under Ice"; Proc. of Subsea Containment of Oil Workshop, Toronto, 1981.
50. Mackay, D., "Aspects of the Behavior of Oil and Gas Plumes in Water"; Proc. of Subsea Containment of Oil Workshop, Toronto, 1981.
51. Meikle, K. M., "Summary of Discussion"; Proceedings of the Subsea Containment of Oil Workshop, Institute of Environmental Studies, University of Toronto, Canada, Pub. No. EE-18, 1981.
52. Meikle, K. M., "Subsea Containment Workshop Report"; Proc. 4th AMOP Tech. Seminar, 1981.
53. Meikle, K. M., "Government Sponsored Subsea Containment Research in Canada Since February, 1981"; Proc. 2nd Subsea Containment of Oil Workshop, Oslo, 1982.
54. Robinson, T. A, "Sub Sea Containment"; Proc. Subsea Containment of Oil Workshop, Toronto, 1981.
55. Chen, K. W., "A Study on the Feasibility of Underwater Containment of Subsea Oil Spills in Arctic Waters"; Proc. of the 2nd AMOP Tech. Seminar, 1979.
56. Debry, Alain, "The French Companies' Point of View"; Proc. 2nd Subsea Containment of Oil Workshop, Oslo, 1982.

57. Guthrie, L. D., and Rowley, P. R., "Containment of Naturally Ocurring Subsea Hydrocarbon Emissions"; Proc. 2nd Subsea Containment of Oil Workshop, Oslo, 1982.
58. Clark, A. R., and Perkins, T. K.; "Wellbore and Near-Surface Hydraulics of a Blown-out Oil Well"; Journal of Petroleum Technology, Nov. 1981.
59. Spill Technology Newsletters (various) Environmental Emergencies Technical Division Publications (EPS), Ottawa, Canada.
60. "BP's SWOPS Nearing Reality"; Petroleum Engineer International, October, 1983.
61. McLeod, W. R., and Smulders, L. H., "An Analysis of Tanker-Based Floating Production Systems for Small Offshore Fields"; Journal of Petroleum Technology, August, 1982.
62. "Steel Gravity Platform Positioning over Template on the North Sea Maureen Field"; Journal of Petroleum Technology, January, 1983.
63. Carter, H. T. and Foolen, J., "Evolutionary Developments Advancing the Floating, Produc;tion, Storage and Offloading Concept", Paper OTC 4273, 1982 Offshore Technology Conference, Houston, Texas.
64. Rees, T. E., and Reber, M. A., "Design Implementation and Field Operations of Offshore Tandem Loading System - Nido Field, Offshore Philippines"; Paper OTC 4012, 1981 Offshore Technology Conference, Houston, Texas.
65. Williams, L. M., Pierce, D. M., and Van Berkel, P., "FPSO II - A Second Generation Floating Production System for Offshore Philippines"; Paper OTC 4274, 1982 Offshore Technology Conference, Houston, Texas.
66. Homer, Alan, "Floating Units Cut Production Costs"; Offshore, May 1983.
67. Key, J. W. and Shumaker, F. E., "Suitability of Tankers for Floating Production Systems in Hostile Environments", 1984 Offshore Technology Conference, Houston, Texas
68. Hammet, D. S. and Johnson, S. C., "First Floating Production Facility - Argyll"; 1977 Offshore Technology Conference, Houston, Texas.

69. Drawe III, W. J., Raj, A., and Rawstron, P. R., "Technical and Economic Considerations in Developing Offshore Oil and Gas Projects Using Floating Production Systems"; Presented at the Society of Naval Architects and Marine Engineers, Texas Section Meeting on February 15, 1985.
70. Brown & Root, Inc. Various Studies on Floating Production Systems (unpublished).
71. USGS Conservation Division Open File Report 83-562, August 1983
72. Danenberger, E. P., "1980 Outer Continental Shelf Oil and Gas Blowouts (1971-78), U. S. Geological Survey Open-File Report 80-101.
73. "Report on Work Performed to Control the Ixtoc I Well, to Combat the Oil Spill and to Determine its Effects on the Marine Environment", July 1980. Pemex Report (in Spanish) Translated for Exxon Prod. Res. Co. by AD-EX.
74. Ross, S. L., Ross, C. W., Lepine, F., and Langroy, E. K., "Ixtoc I, Oil Blowout"; Spill Technology Newsletter, July-August 1979.
75. "The Approach to SWOPS", A Discussion by Jim Herd, Project Manager (SWOPS); The Oilman, December 1983.
76. "Full Flow on Day One," The Oilman, December 1983.
77. "Worely Unveils Its Floating Oilpatch", The Oilman, December 1983.
78. "Nippon Kokan Wins World's First Contract for Offshore Oil-Production Tanker", VERITAS, November/December 1984.
79. Kinnaman, S. C., "Production Risers and Manifolds for Floating Production Facilities", (Source unknown).
80. Burn, A. J. and Graaf, G., "Topside Facilities for Floating Production Systems Require New Engineering Thinking", Paper OTC 4543, 1983 Offshore Technology Conference, Houston, Texas.
81. "Barge System for Marginal Fields", Petroleum Enginer International, February 1985.
82. O'Neill, D. A. and Hoornenborg, B. C., "A Unique Approach to the Offshore Gas Disposal Problem: Castellon 'SALS' Production Facilities", Paper OTC 3447, 1979 Offshore Technology Conference, Houston, Texas.

83. White, G. J. Chivvis, J. C. Ramzan, F. A. and Kypke, D. A., "Hutton TLP Installation: Analysis and Operation of the Semisubmersible-Assisted Mooring System", Paper OTC 5047, 1985 Offshore Technology Conference, Houston, Texas.
84. Eijkhout, F. "Tarraco Field Development with the SLS Floating Production System", Proceedings of the 1978 European Offshore Petroleum Conference and Exhibition.
85. Logan, B. L, and Rothwell, E. G., "Buchan Development Project - Conversion of a Drilling Rig into a Floating Production Platform", Paper OTC 3958, 1981 Offshore Technology Conference, Houston, Texas.
86. Mieras, A. A., "Buchan Field Joint Venture Development and Initial Operation", Petrobras Seminar on Early Production Systems, Sept. 8-10, 1982.
87. Daeschler, J. L., "The Development of Floating Production Facilities - Second Year of Operation at Argyll Field", Offshore Engineer, 1977, OE.77-V.2.1 to 2.4.
88. "Argyll, Buchan and All That", NOROIL.
89. "Floating Production Systems: build New or Remodel?", Petroleume Engineer International, March 1985.
90. Sub-Arctic Deep Water Petroleum Technology Assessment", Technical Report No. 109, Prepared by Brown & Root Development, Inc. for the Minerals Management Services, Alaska OCS Region, under Contract No. 14-12-0001-30062.
91. Pfenning, D. B., "Blowout Fire Simulation Tests: Final Report", Prepared for National Bureau of Standards, Solicitation No. SB 83NBS0080, April 1984.
92. Pfenning, D. B., and Evans, D., "Suppression of Gas Well Blowout Fires Using Water Sprays; Large and Small Scale Studies", Presented at American Petroleum Institute, Committee on Fire and Safety Protection, Production Session, San Antonio, Texas, Sept. 11-13, 1984.
93. $90-million MSV Equipped for Any Offshore Emergency", Ocean Industry, May 1980.
94. "Firefighting, Part V", Proceedings of the Marine Safety Council, Ship and Equipment Design, January 1985.

95. Hoopker, C. H., "The Ixtoc I Oil Spill: The Federal Scientific Response", NOAA Report No. NOAA-82042804, December 1981.
96. Boehm, P. D., and Fiest, D. L., "Subsurface Distribution of Petroleum from an Offshore Well Blowout - The Ixtoc I Blowout, Bay of Campeche", Environmental Science Technology, V16, No. 2, Feb. 1982.
97. Brooks, J. M., Bernard, B. B., Sauer, T. C. Jr., and Abdel-Reheim, H., "Environmental Aspects of a Well Blowout in the Gulf of Mexico", Environ. Sci. Tech. V12, No. 6, June 1978.
98. Meikle, K. M., "Subsea Containment - A Possible Alternative to the Sombrero Approach", Spill Technology Newsletter, July-August 1982, EPS, Ottawa, Canada.
99. Lugo, O. L. U., and DeLeon, I. O., "Ixtoc No. 1, Blowout and Control Operation", Paper SPE 9697, 1981 Deep Drilling and Production symposium of the Society of Petroleum Engineers.
100. "Turret Units Ideal for Harsh Environment", Offshore, February 1985, pp. 17.
101. Bond, Dave, "How Conoco Moored a Semi to Drill in 2,200 ft Water", Ocean Industry, February, 1985, pp. 48-49.
102. Det norske Veritas, Technical Notes for Fixed Offshore Installations: "Flexible Pipes and Hoses for Submarine Pipeline Systems", TNA 503, January, 1981.
103. de Oliveira, J. G., Goto, Y., and Okamoto, T.: "Theoretical and Methodological Approaches to Flexible Pipe Design and Application", Offshore Technology Conference, Paper No. 5021, May, 1985.
104. Skimming Barrier System Operation & Maintenance Manual, U. S. Coast Guard, May, 1982.
105. Wilson, H. B., "Development and Testing of a Weir Boom for Oil Recovery at Sea," Proceedings of the 1981 Oil Spill Conference, pg. 646.
106. Lindblom, Gordon P., "Logistic Planning for Oil Spill Chemical Use", Proceedings of the 1979 Oil Spill Conference, pg. 455.
107. Telephone Conversations with Various Oil Spill Cooperatives and Dispersant Manufacturers, Sept. 1980.
108. "The Bravo Blow-Out: The Action Command's Report", Norwegian Ministry of the Environment, December, 1977.

109. Adapted from Marcus, Sidney O., "Environmental Conditons Within Specified Geographical Regions Offshore East and West Coasts of the United states and in the Gulf of Mexico," National Data Buoy Center, April, 1973.

110. Chemicals for Oil Spill Control, Exxon Corp., April, 1980, pg. VI-9.

111. Lindblom, pg. 457.

112. Costs are drawn from a variety of sources including actual operations charges and quotations from vendors.

Other Useful References
(Supplementary List)

A.1 Sjøen, K., "Modelling of Bubble Plumes from Subsea Blowouts", (Doctoral Dissertation, NTH, December 1982), SINTEF Report No. STF 15 A82039, Trondheim, Norway.

A.2 Fanneløp, T. K., Unkel, W., and Chen, K. Y., "Study of Fires and Environmental Problems Associated with Blowouts from Offshore Wells", Consultancy Report (unpublished), 1978.

A.3 Fanneløp, T. K., and Ryhming, I. L., "Loss of Buoyancy due to Gas Released from Underwater Sources". (source unknown)

A.4 Teigen, P. S., "Model Tests with a Bell Shaped Structure for Control of Underwater Blowouts", NHL Report 1 40047, 1980. (confidential)

A.5 Westergaard, R. H., "Preparedness Against Uncontrtolled Blowouts" Report No. 760105-5, Central Institute of Industrial Research, Oslo, May 1979.

A.6 Sjøen, K. "Simple Model-Experiments with Subsea Containment", Unpublished Note, The Ship Research Institute of Norway, Trondheim, February 1980.

A.7 Haaland, S. E., "Mathematical Modelling of Bubble Plumes", Report IFAG B-122, Division of Aero and Gas Dynamics, NTH, Trondheim, 1979.

A.8 Sjøen, K., "Data From Measurements in Bubble Plumes", SINTEF Project Memo, Proj. No. 150030, Memo No. 1, 1982.

A.9 "Fire Contingency Vessels, an Introductory Study", DnV Report No. 79-0015.

A.10 Sjøen, K., Karal, K., and Wold, M., "Oil Collection from Subsea Blowouts", NHL/SINTEF Report, Trondheim, Norway, September 1981.

A.11 Odgaard, E., "Methods for Estimating Discharge Rates of Liquids, Gases and Two-phase Liquid/Gas Mixtures"; VERITAS Report No. 81-0402.

A.12 Nyland, J., "Blow-Down", Report No. 3.3, User's Manual for Element Program "PIPE" VERITAS Report No. 79-0366.

A.13 Kvernvold, O., and Sontvedt, T., "Erosion/Corrosion in Multiphase Flow; Full Scale Flow Pattern, Wall Shear and Straight Erosion in the Production Equipment for an Offshore Gas/Condensate Field", VERITAS Report No. 82-0011.

A.14 Mundheim, D. and Fanneløp, T. K., "Studies of Oil Spills from Blowouts and Broken Underwater Pipelines", Offshore North Sea Technology Conference, Paper ONS-S-III/3, Stavanger, 1976.

A.15. "Behavior of Subsurface Discharges of Oil, Gas and Dispersants, Special Studies - 1982 Study Results"; (BIOS) Baffin Island Oil Spill Working Report 82-7.

A.16 Topham, D. R., "Hydrodynamics of an Oilwell Blowout", Beaufort Sea Technical Report #33, Department of the Environment, Victoria, Canada, 1975.

A.17 Abdelnour, R. et. al, "Novel Countermeasures for an Arctic Offshore Well Blowout", Publication No. EPS-3-EC-77-14, Enviornmental Emergencies Technical Division, Ottawa, Canada.

A.18 "Theoretical Study for the Scale Modelling of Subsea Containment Devices", EPS Publication No. EE-11, Ottawa, Canada.

A.19 Fung, D. and Ng, K., "Subsea Containment Study", Contract Report to Dome Petroleum, 1981.

A.20 Ng, k., "Subsea Containment Study - Preliminary System Design", Contract Report to Dome Petroleum, 1982.

A.21 Reimer, E. M., and Diemand, D., "Subsea Containment", Contract Report to Dome Petroleum, 1981.

A.22 Twardus, F. M., "Subsea Containment Study-Turbulent Burning", Contract Report to Dome Petroleum, 1981.

A.23 Topham, D. R., "Measurements of Deepset Bubble Plumes", (unpublished manuscript), Institute of Ocean Sciences, Sidney, B. C.

A.24 Milgram, J. H. and McLaren, W., "The Response of Floating Platforms to Subsea Well Blowouts", M. I. T. Dept. of Ocean Engr. Report No. 82-8, 1982.

A.25 Milgram, J. H., and Van Houten, R. J., "Plumes from Subsea Well Blowouts", Proc. of Third International Conference on the Behavior of Offshore Structures", M. I. T., Cambridge, MA, 1982.

A.26 Milgram, J. H., "Determination of Methods for Collecting Oil at a Subsurface Location above a Blowout", Annual Report Under USGS Contract No. 14-08-0001-18611, Sept. 1980.

A.27 Kobus, H. E., "Analysis of the Flow Induced by Air-Bubble Systems", Proceedings of the Coastal Engineering Conference, Vol. II, Chap 65, pp. 1016-1031, London, 1968.

A.28 Ditmars, J. D., and Cederwall, K., "Analysis of Air-Bubble Plumes"; Proceedings of the Coastal Engineering Conference, Vol. II, Chap 128, pp. 1209-1226, Copenhagen, 1974.

A.29 McDougall, T. J., "Bubble Plumes in Stratified Environments, Journal of Fluid Mechanics, 1978, 85, pp. 655-672.

A.30 Taylor, G. I., "Flow Induced by Jets", Journal Aerospace Sciences, 25, 1958, pp. 464-65.

A.31 Taylor, G. I., "The Action of a Surface Current Used as Break-water", Proceedings Royal Soc. A231, pp. 466-78, 1955.

A.32 Chen, C. J., and Rodi, W., "Vertical Turbulent Buoyant Jets, a Review of Experimental Data", HMT - The Science and Application of Heat and Mass Transfer, Report, Reviews and Computer Programs, Pergamon, 1980.

A.33 Fox, D. G., "Forced Plume in a Stratified Fluid", Journal Geophylical Research 75, pp. 6818-6835.

A.34 George, W. K., Alpert, R. L., and Tamanini, F., "Turbulence Measurements in an Axysymmetric Buoyant Plume", International Journal of Heat and Mass Transfer 20, pp. 1145-1154.

A.35 U. S. Geological Survey: Reliability Study - Subsurface Devices.

A.36 Weisman, I., and Kang, S. Y., "Flow Pattern Transitions in Vertical and Upward Inclined Pipes", International Journal of Multiphase Flow, Vol. 7, 1981.

A.37 Wallis, G. B., "One-Dimensional Two-Phase Flow", McGraw-Hill Book Co. 1969.

A.38 Standing, M. B., "A Pressure-Volume-Temperature Correlation for Mixtures of California Oils and Gases", Drilling & Prod. Practices A. P. I., pp. 247, 1947.

A.39 Turner, J. S. "Buoyancy Effects in Fluids", Cambridge University Press.

A.40 Hussain, N. A., and Siegel, R., "Liquid Jet Pumped by Rising Gas Bubbles", Journal of Fluids Engineering, March 1976, pp. 49-57.

A.41 Drew, D. A., "Mathematical Modelling of Two-Phase Flow", Annual Reviews of Fluid Mech., 1983, 15, pp. 261-91.

Tab

Appendices

Tab

Appendix I

APPENDIX 1.0
WORK BREAKDOWN STRUCTURE

WORK BREAKDOWN STRUCTURE
JOB No. XC-0030

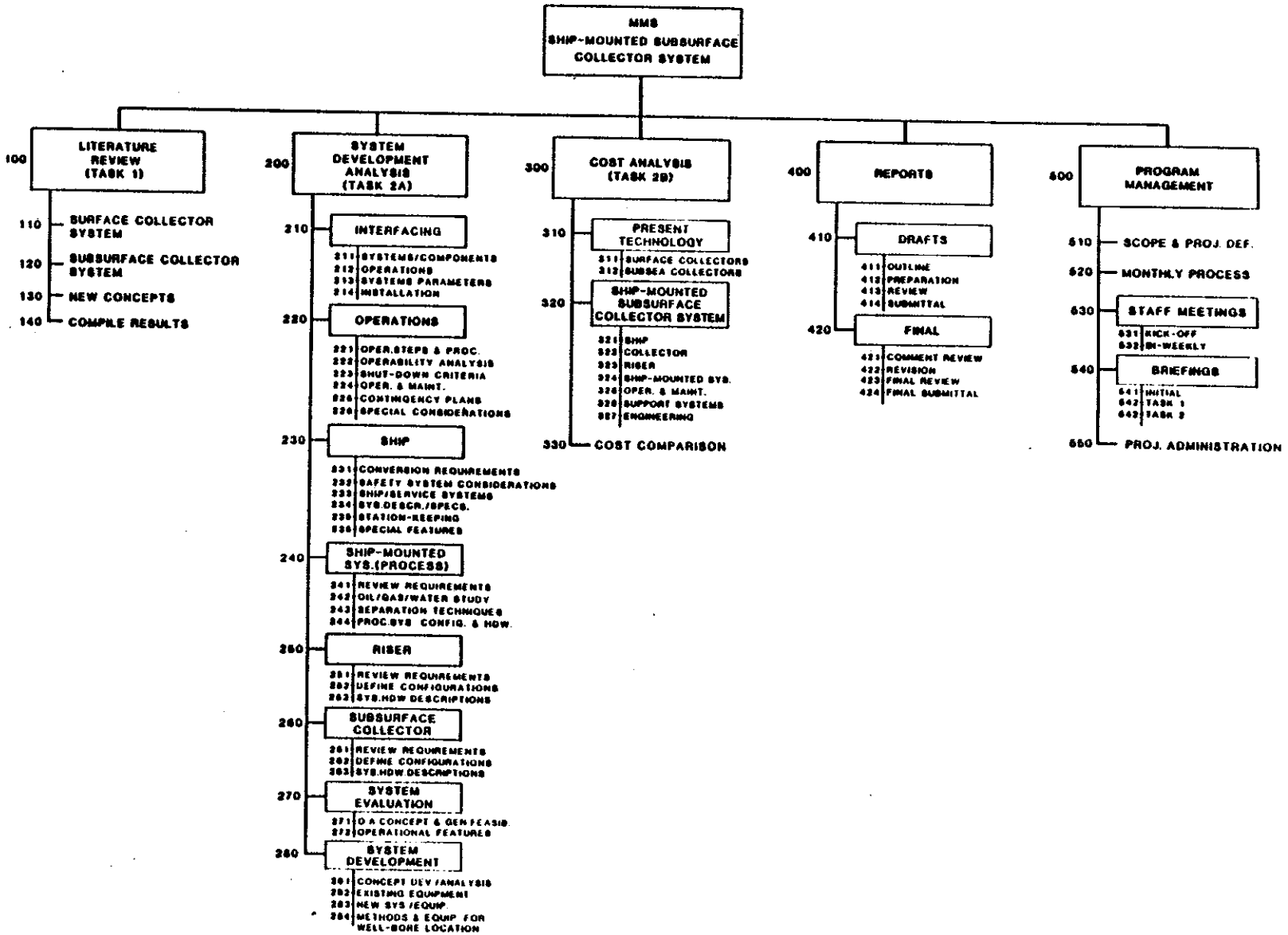

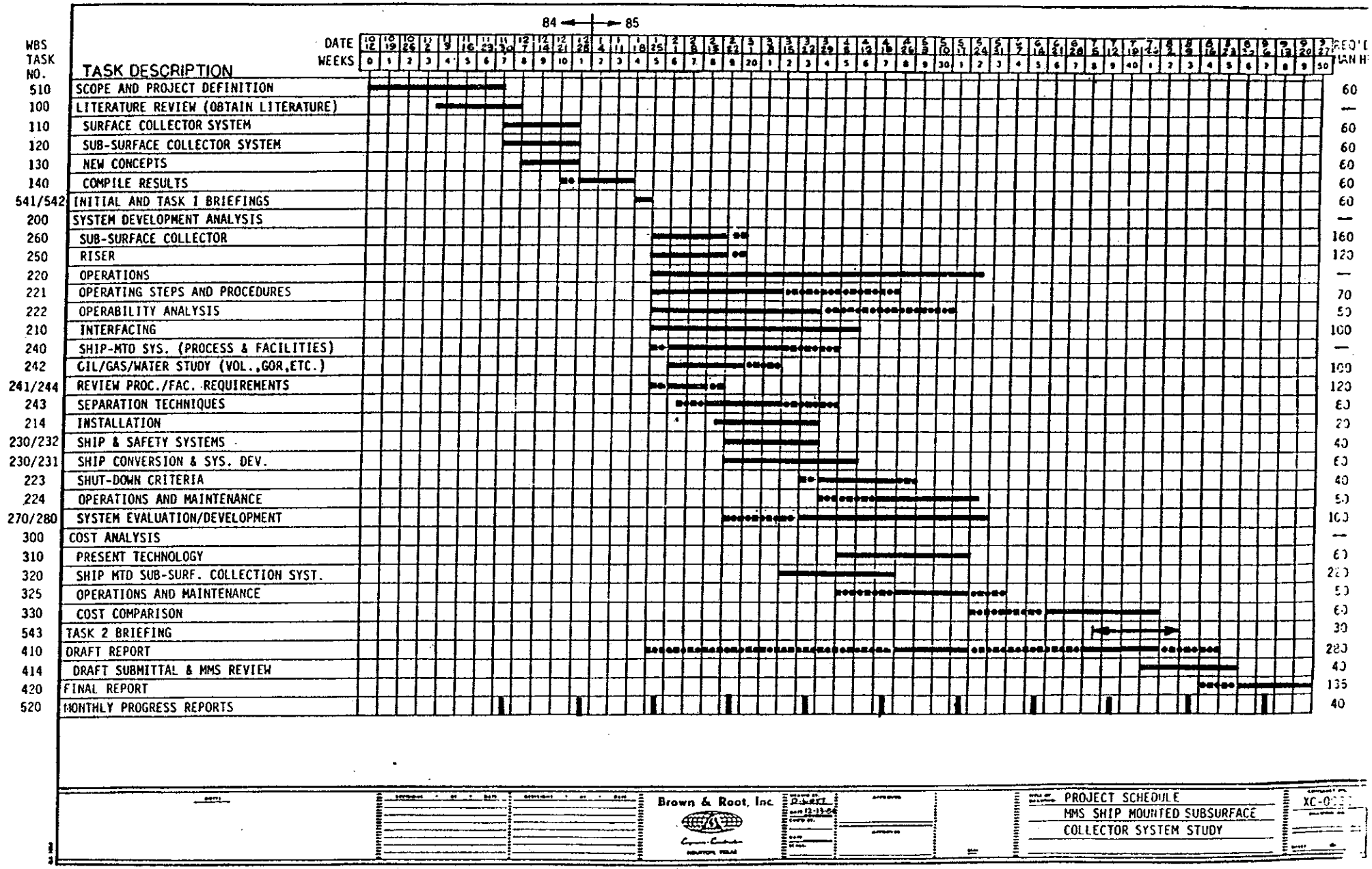
84
85
DATE
WEEKS
WBS TASK NO.
TASK DESCRIPTION
510 SCOPE AND PROJECT DEFINITION
100 LITERATURE REVIEW (OBTAIN LITERATURE)
110 SURFACE COLLECTOR SYSTEM
120 SUB-SURFACE COLLECTOR SYSTEM
130 NEW CONCEPTS
140 COMPILE RESULTS
541/542 INITIAL AND TASK I BRIEFINGS
200 SYSTEM DEVELOPMENT ANALYSIS
260 SUB-SURFACE COLLECTOR
250 RISER
220 OPERATIONS
221 OPERATING STEPS AND PROCEDURES
222 OPERABILITY ANALYSIS
210 INTERFACING
240 SHIP-MTD SYS. (PROCESS & FACILITIES)
242 OIL/GAS/WATER STUDY (VOL.,GOR,ETC.)
241/244 REVIEW PROC./FAC. REQUIREMENTS
243 SEPARATION TECHNIQUES
214 INSTALLATION
230/232 SHIP & SAFETY SYSTEMS
230/231 SHIP CONVERSION & SYS. DEV.
223 SHUT-DOWN CRITERIA
224 OPERATIONS AND MAINTENANCE
270/280 SYSTEM EVALUATION/DEVELOPMENT
300 COST ANALYSIS
310 PRESENT TECHNOLOGY
320 SHIP MTD SUB-SURF. COLLECTION SYST.
325 OPERATIONS AND MAINTENANCE
330 COST COMPARISON
543 TASK 2 BRIEFING
410 DRAFT REPORT
414 DRAFT SUBMITTAL & MMS REVIEW
420 FINAL REPORT
520 MONTHLY PROGRESS REPORTS
60
—
60
60
60
60
60
—
160
120
—
70
50
100
—
100
120
60
20
40
60
40
50
100
—
60
220
50
60
30
220
40
135
40
Brown & Root, Inc.
PROJECT SCHEDULE
MMS SHIP MOUNTED SUBSURFACE
COLLECTOR SYSTEM STUDY

MMS SHIP-MOUNTED SUBSURFACE COLLECTOR SYSTEM
DEVELOPMENT AND COST ANALYSIS
DETAILED WORK BREAKDOWN AND TASK DESCRIPTIONS

TASK NO.	TASK DESCRIPTION	TOTAL HOURS	START DATE	FINISH DATE
100	LITERATURE REVIEW			
110	Surface Collector System			
120	Subsurface Collector Systems			
130	New Concepts			
140	Compile Results			
200	SYSTEM DEVELOPMENT ANALYSIS			
210	INTERFACING			
211	Systems/Components			
211-1	Ship/Riser/Collector			
211-2	Ship/Process Systems			
211-3	Support Systems			
212	Operational			
212-1	Operations Management			
212-2	Stowage/Lightering/Transfer			
213	System Parameters			
213-1	Functional Requirements			
213-2	Operational Requirements			
213-3	Environmental Conditions			
213-4	Subsystem Interface Network			
214	Installation			
214-1	Deployment/Abandonment			
220	OPERATIONS			
221	Operating Steps and Procedures			
221-1	Deployment (including rigging and emplacement of the Collector)			
221-2	Abandonment			
221-3	Lightering/Offloading			
221-4	Positioning			
221-5	Redeployment			
221-6	Station-keeping (Ship, riser, and Collector)			
221-7	Ship-board Operations			
221-8	Fire-Shielding			
221-9	Fire Entering			

221-10 Surface Fire Suppression and Extinguishing
221-11 Ignition Prevention (from ship-board apparatus)
221-12 Water Curtains for Engine Exhausts
221-13 Life Support Emergency
221-14 Rapid Disconnect (from mooring and collector/riser equipment)
221-15 Operational Safety
221-16 Transportation
221-17 Diver/ROV Support
221-18 Debris Removal from Wellhead Region
221-19 Graphic Representation
221-20 Entering Jet Zone
221-21 Mooring of Export Vessel

222 Operability Analysis
222-1 Survivability Analysis
222-2 Logistics
222-3 Redeployment
222-4 Survivability of Abandoned Systems
222-5 Station-keeping (ship, riser & (collector)
222-6 Maintainability

223 Shut-down Criteria

224 Operations and Maintenance

225 Contingency Plans (for system failures, meteorological conditions, safety hazards, etc.)

226 Special Considerations
226-1 Counter-fit Collector Concept
226-2 Flexible Riser Deployment/Retrieval
226-3 Turret Moored/Weathervaning Tanker Concept

230 SHIP

231 Conversion Requirements
231-1 Basic Requirements (Ship)
231-2 Availability
231-3 Hull/Structural
231-4 Stowage Areas (Holds)
231-5 Moon Pool
231-6 Accommodations & Operations Areas
231-7 Stability
231-8 Equipment Arrangement
231-9 Diving/ROV Support Facilities

	231-10	Dispersant Storage and Application
	231-11	Handling Equipment COnfiguration
232		Safety System Considerations
	232-1	Ventilation (interim relief, tanks and other areas)
	232-2	Water Curtains for Engine Exhausts
	232-3	Emergency Vessel Abandonment and Alarm
	232-4	Life Support
	232-5	Hull/Superstructure Cooling
	232-6	Rapid Disconnect from mooring and collector/riser equipment
	232-7	Fire Shielding System
	232-8	Inerting System
	232-9	Location of Water suction sea-chests
	232-10	Surface Flare Suppression and Extinguishing System
	232-11	Preventing Ignition from shipboard Apparatus (Fire-proofing System)
233		Ship/Service Systems
	233-1	Propulsion System
	233-2	Monitoring, Control, Data Aquisition and Navigation Systems
	233-3	Ballasting
	233-4	Power System
	233-5	Provision for using blow-out gas as supplemental fuel
	233-6	General Ship-Service Systems
234		System Descriptions/Specifications
	234-1	Hardware
	234-2	Drawings
235		Station-Keeping
	235-1	Dynamic Positioning
	235-2	Motions (ship, Riser, etc.)
	235-3	Turret-Mooring/Weathervaning
	235-4	Stabilization (Ship, riser, collector)
236		Special Features
	236-1	Lightering Facilities & Resupply
	236-2	Means of Deployment and Retrieval of Transfer Hoses
	236-3	Equipment for Debris Removal from Well-head Area
	236-4	Counter-fit Collector Provision

240 SHIP-MOUNTED SYSTEM (PROCESS & FACILITIES)

241 Review Requirements

242 Oil/Gas/Water Study (Vol, GOR, etc.)

- 242-1 Oil-in-Discharged-Water Assessment
- 242-2 System Performance Review
- 242-3 Inert Gas Determination

243 Separation Techniques

- 243-1 Study of capturing gas for use as supplemental fuel

244 Process, System Configuratin and Hardware

- 244-1 System Sizing
- 244-2 Gas Flaring System
- 244-3 Oil Burning System (including tar, sludge, etc.)
- 244-4 Oil Collection System
- 244-5 Monitoring, Control and Instrum.
- 244-6 Sour Gas Provision (for safety)
- 244-7 Sour Gas Provision (for metallurgical effects)
- 244-8 Sour Gas Detection and Alarm
- 244-9 Tank Venting Requirements
- 244-10 Heating/Cooling Requirements (Process)
- 244-11 Dispersant Storage and Application Provision (Process)
- 244-12 Degasification System
- 244-13 De-emulsification System
- 244-14 Water Disposal System
- 244-15 Chemical Treatment of Discharged Water

250 RISER

251 Review Requirements

252 Define Configurations

- 252-1 Mixed Flow Analysis
- 252-2 Design Review and Optimization
- 252-3 Tensioning Requirements/Capabilities
- 252-4 Vibration Considerations
- 252-5 Buoyancy Considerations (integral and remote controlled)
- 252-6 Weight Factor
- 252-7 Flexible Risers
- 252-8 Sketches
- 252-9 Environmental Considerations

253 System Hardware Descriptions
- 253-1 Risers
- 253-2 Slip-joint Configuration and fabrication
- 253-3 Coupling equipment
- 253-4 Corrosion and Materials
- 253-5 Effects of hydrate, wax, foam and emulsion, etc.
- 253-6 Insulation Requirements

260 SUBSURFACE COLLECTOR

261 Review Requirements
- 261-1 Environmental Considerations
- 261-2 Capability for Entering Jet Zone

262 Define Configuration (single and multiple risers)
- 262-1 Counter-fit Collector Configuration
- 262-2 Analyze Design & Optimize
- 262-3 Anchoring/Positioning System
- 262-4 Rigging and Emplacement Considerations
- 262-5 Positioning (relative to sea-floor) Study
- 262-6 Weight and Buoyancy Considerations
- 262-7 Sketches

263 System Hardware Descriptions
- 263-1 Material Considerations
- 263-2 Corrosion Effects
- 263-3 Metallurgical Effects of Oil & Gas
- 263-4 Collector
- 263-5 Anchors

270 SYSTEM EVALUATION

271 Over-all Concept and General Feasibility
- 271-1 Practicality/Workability
- 271-2 Effectiveness (response time, efficiency)
- 271-3 System Integration
- 271-4 Operational Elements
- 271-5 Limitations
- 271-6 New vs Existing Systems
- 271-7 Parametric Evaluations

272 Optional Features
- 272-1 Modularized independent floating subsea collector systems (turret moored/weathervaning tanker)

272-2 Use as an interim/early production system
272-3 Use as an extended well test system

280 SYSTEM DEVELOPMENT

281 Concept Development/Analysis

282 Existing Equipment

283 New Systems/Equipment

284 Methods & Equipment for Accurately Locating Well Bore

---

300 COST ANALYSIS

310 PRESENT TECHNOLOGY

311 Surface Collector
311-1 Skimmers (eqpt., oper. & maint.)
311-2 Barriers (eqpt., oper. & maint.)

312 Subsea Collectors

320 SHIP-MOUNTED SUBSURFACE COLLECTOR SYSTEM

321 Ship
321-1 Basic snip
321-2 Ship Conversion (by subsystems/components)
321-3 Purpose-built ship

322 Collector

323 Riser

324 Ship-mounted system
324-1 Process System w/Chem. Treatment
324-2 Process System w/o Chem. Treatment

325 Operations and Maintenance
325-1 System Depreciation

326 Support Systems

327 Engineering

330 COST COMPARISION

400		REPORTS
410		DRAFT
	411	Outline
	412	Preparation
	413	Review
	414	Submittal
420		FINAL
	421	Comment Review
	422	Revisions
	423	Final Review
	424	Final Submittal
500		PROGRAM MANAGEMENT
510		SCOPE AND PROJ. DEFINITION
520		MONTHLY PROGRESS
530		STAFF MEETINGS
	531	Kick-off
	532	Bi-Weekly
540		BRIEFINGS
	541	Initial
	542	Task 1
	543	Task 2
550		PROJECT ADMINISTRATION

103

Appendix 2

APPENDIX 2.0

TABLES AND CALCULATIONS

APPENDIX 2

TABLES AND CALCULATIONS

THE PLUME THEORIES

A HISTORICAL BACKGROUND, AND

ANALYTICAL AND EXPERIMENTAL RESULTS

2.1. Flow and Collection Efficiency Calculations using Topham, Rowe et al [29,30] and Milgram [8] approaches.

2.2 Data from Milgram's Bugg Spring Model Tests [8].

2.3. History of Plume Theory and Analytical and Experimental Results of Fannelöp and Sjøen [33].

2.4. History of Plume Theory and Analytical and Experimental Results of J.H. Milgram [7]

2.5. Analytical and Experimental Results of R.D. Rowe [31].

2.6. Dr. J.H. Milgram's Calculations of Collection Efficiencies and Related Technical Correspondences for this Study.

2.1. Flow and Collection Efficiency Calculations using Topham, Rowe et al [29, 30] and Milgram [8] Approaches.

Dr. Milgram's Analyses/Tests

Mathematical Definitions

Froude Number $F = \frac{Q_T}{(gh^5)^{1/2}}$; Q_T = Total liquid flow thru' riser

Phase Ratio $R = \frac{Q_T}{Q_g}$; Q_g = Gas vol. flow rate

Modified F, or $F' = \frac{Q_T}{[g(h-D')^5]^{1/2}}$

Fundamental Length Scale of Buyant Gas Flow, $L_A = \frac{Q_A^{0.4}}{g^{0.2}}$; Q_A = gas vol. flow rate at the collector entrance

Length scale of Bubbles, $L_B = \sqrt{\frac{T}{\rho_w g}}$; T = gas-liquid surface tension = 0.072 Newtons per m

ρ_w = mass density of water = 1000 kg/m³

Modified Phase Ratio, $R' = R\left(1 + E'\frac{L_B}{L_A}\right)$; E' = dimensionless Constant

Modified Interpolating Function

$$P = 100 \times \left[1 - \exp\left(\frac{-A' \times R' \times F'}{B' + R'}\right)\right]^{C'}$$

= Percentage of blowout liquid collected

Constants:

$A' = 59.69$
$B' = 6.991$
$C' = 0.3726$
$D' = 0.1112$ m
$E' = 11.77$

obtained by correlating the single collector test data with the equation above.

TABLE A.2.1

ANL (2)

COMPARISON BETWEEN MILGRAM'S AND TOPHAM'S ANALYSES

MILGRAM	TOPHAM et al
Entrained Flow Q_E: No Formula	$Q_E = 0.4 Q_o^{1/3} h^{5/3}$ m^3/sec, or $Q_{pth} = \pi(\frac{6\alpha}{5})[\frac{2\alpha}{10} \cdot \frac{2g(1+\lambda^2)}{\pi} Q_g]^{1/3} (z+z_o)^{5/3}$
Total Flow Q_T: No Formula	$Q_T = Q_{pmh}(1 - e^{-\frac{Q^2}{Q_{mph}^2}})$
	$Q_{oil} = \frac{\pi \lambda^2 b^2}{1+\lambda^2} C_{pmh} V_{pmh}$
	$P_m = [1 - e^{-\frac{1+\lambda^2}{\lambda^2} \cdot \frac{Q^2}{Q_{mph}^2}}]$, or
	$P_m = \left\{1 - [1 - \frac{Q_T}{Q_{mph}}]^{\frac{1+\lambda^2}{\lambda^2}}\right\}$ for $Q_T \le Q_{mph}$
	$P_m = [1 - (1 - \frac{F''^{2/3} \cdot R^{1/3}}{K_8})^2]$
	For $F''^{2/3} \cdot R^{1/3} \le K_8$, and $\lambda = 1.0$ $Q_{pth} = Q_{pmh}$ $P_m = 100\%$ for $Q_T > Q_{mph}$, or $F''^{2/3} \cdot R^{1/3} \ge K_8$ and F'' has a finite value. All valid only if entire gas goes through the riser.
Collection Efficiency $P = [1 - e^{-\frac{A' F' R'}{B' + R'}}]^E$ for model, valid only if all the gas goes through the riser. $P \to 100\%$ asymptotically as $F' \to \infty$ (since R' can not be ∞).	
Phase Ratio $R' = \frac{Q_T}{Q_g}(1 + E' \frac{L_B}{L_A})$	$R_p = \frac{Q_{ph}}{Q_g}$ for Plume $R_r = \frac{Q_T}{Q_{gr}}$ for Riser $R_r = R = \frac{Q_T}{Q_g}$ if $Q_{gr} = Q_g$
Froude Number $F' = \frac{Q_T}{[g(h-D')^5]^{1/2}}$ in the plume	$F_r = \frac{Q_T}{(g d_r^5)^{1/2}}$ for Riser $F'' = \frac{Q_T}{[g(h+z_o)^5]^{1/2}}$ for Plume $F_o = \frac{Q_o}{(g d_o^5)^{1/2}}$ for wellhead
Length Scale: h (Characteristic Height)	$(h+z_o)$ See Fig 2.2.38
Standard Deviations: Lab Data: 8.7 % Bugg Spring: 7.2 % 14.0 % 13.6 %	(Using Milgram's Data) 10.2 % 9.0 % Standard Single Cone 16.3 % Riser Alone 19.4 % Double Cone
SEE REF. [8] FOR DEFINITION	SEE REF. [29 & 30] FOR DEFINITIONS.

Milgram's/Burgess' Observations

1. Effective Collection possible with sufficiently small "h" (or z) and high R.

2. Larger values of h would mean higher flow rates (Q_T) which would require large diameter riser.

3. The amount of gas required for most efficient collection is found to be much less than expected flow from the blow-out when a single collector and riser system is used. Therefore, a gas-separating type (double) collector is found to be much more efficient.

4. Lab tests showed that riser diameter only affected riser resistance and the increased riser resistance could be duplicated by using a valve on the larger dia. risers.

5. High collection efficiency was found to be dependent upon high Q_T which required riser resistance.

ANLS

Calculations using Topham's Formula and Milgram's Test Data (1/4th Scale Model) [8]

$$Q_E = 0.4\, Q_o^{1/3} \cdot h^{5/3} \quad m^3/sec \quad [29]$$
$$= 0.59438\, Q_o^{1/3}\, h^{5/3} \quad ft^3/sec$$
$$= \text{Vol. of Entrained water.}$$

Using Data from [8] for a Single Collector:

TABLE A.2.1.1

Height	Measured Flow Rate	Gas Flow at Wellhd.		Phase Ratio R		Collection Effy.	
h, m	Q_E	Calcul'd	Measured	Calcul'd	Measured	Theoret'l	Measured
1.19	0.10106	0.00676	0.00868	15.089	12.120	93.57	107.51
1.19	0.10224	0.00700	0.00868	14.857	12.322	48.686	58.091
0.04	0.09987	1.52×10^5	0.00886	0	11.875	46.887	46.887
1.72	0.10290	0.00113	0.0086	92.035	22.466	75.110	93.545
0.04	0.13399	3.6706×10^5	0.03109	0	4.523	58.768	66.662
1.19	0.13619	0.01654	0.03047	8.343	4.684	60.261	75.243
1.19	0.07758	0.00306	0.03047	25.82	2.674	34.48	54.634
1.19	0.03874	0.00038	0.03047	105.26	1.366	17.218	30.746
0.64	0.13384	0.34888	0.03076	0.39	4.550	59.484	61.963
0.64	0.03772	0.00781	0.03076	4.994	1.314	16.764	29.469
0.64	0.07495	0.06127	0.03076	1.257	2.571	33.311	36.561
0.04	0.14513	4.66×10^5	0.10363	0	1.472	72.930	77.610
1.19	0.11362	0.00960	0.10895	11.979	1.093	53.343	82.333
1.19	0.05032	0.00083	0.10895	61.446	0.482	23.848	74.000
1.72	0.15465	0.00384	0.10797	40.365	1.483	175.739	441.857
1-72	0.05187	0.00014	0.10797	371.429	0.500	54.600	399.000

For these calculations it has been assumed that the entire air was going thru' the riser, and Q_E = Total measured flow minus total dye flow.

Comment

There is no correlation between Milgram's test data and Topham's formula Of course, the latter is admittedly imprecise. However, the revised mathematical formula by Rowe and Topham [30] would give even lower values since in the improved version

$$Q_{pth} = \left(\frac{6\alpha}{5}\right)\pi\left[\frac{9\alpha}{10}\cdot\frac{2(1+\lambda^2)}{\pi}g\,Q_0\right]^{1/3}(z+z_0)^{5}$$

the value of $\left(\frac{6\alpha}{5}\right)\pi\left[\frac{9\alpha}{10}\cdot\frac{2(1+\lambda^2)}{\pi}g\right]^{1/3} < 0.4$

It may be noted, however, that the amount of gas flowing through the riser may be less than 100%, and also all the dye may not be going through.

One important extraction may be made from Milgram's test data that the total flow Q_T (or the total entrained water Q_E) is greater than that predicted by Topham's formula. And that is very likely also. Topham's formula becomes invalid in case when $Q_T > Q_{pth}$.

ANLS
(6)

CALCULATION OF ENTRAINED WATER. $Q_E = 0.4 Q_o^{1/3} Z^{5/3}$ m³/sec

TABLE A.2.1.2

VOLUME OF ENTRAINED WATER PER TOPHAM ET AL [29]; $Q_E = 0.59438 Q_o^{1/3} Z^{5/3}$ cu ft/sec.

Height of collector	100 ft		200 ft		300 ft		400 ft	
	cft/sec	BPD	cft/sec	BPD	cft/sec	BPD	cft/sec	BPD
0 ft	0	0	0	0	0	0	0	0
5 ft	37.07	570,448	30.75	473,232	27.30	420,121	25.01	384,920
10 "	117.69	1,811,072	97.63	1,502,418	86.68	1,333,802	79.41	1,222,044
15 "	231.33	3,559,750	191.90	2,953,087	170.37	2,621,663	156.09	2,401,997
20 "	373.64	5,749,773	309.96	4,769,880	275.18	4,234,558	252.12	3,879,749
25 "	541.96	8,340,026	449.60	6,918,692	399.14	6,142,212	365.70	5,627,562
30 "	734.41	11,301,501	609.25	9,375,466	540.88	8,323,261	495.56	7,625,864
35 "	949.55	14,612,150	787.72	12,121,904	699.32	10,761,468	640.72	9,859,776
40 "	1186.24	18,254,391	984.07	15,143,424	873.63	13,443,884	800.43	12,317,435
45 "	1443.63	22,213,733	1197.52	18,428,003	1063.12	16,359,836	974.04	14,989,063
50 "	1720.63	26,477,931	1427.40	21,965,483	1267.20	19,500,306	1161.02	17,866,397

	500 ft		600 ft		700 ft		800 ft	
5	23.34	359,191	22.04	339,194	20.99	322,982	20.11	309,515
10	74.10	1,140,360	69.98	1,076,872	66.63	1,025,403	63.86	982,648
15	145.66	2,241,442	137.55	2,116,653	130.97	2,015,487	125.51	1,931,450
20	235.27	3,620,418	222.17	3,418,857	211.55	3,255,451	202.73	3,119,714
25	341.26	5,251,404	322.26	4,959,040	306.85	4,722,020	294.06	4,525,134
30	462.43	7,116,135	436.69	6,719,954	415.82	6,398,771	398.48	6,131,972
35	597.90	9,200,728	564.61	8,688,490	537.62	8,273,220	515.21	7,928,265
40	746.93	11,494,112	705.34	10,854,193	671.63	10,335,413	643.63	9,904,473
45	908.94	13,987,162	858.33	13,208,447	817.31	12,577,144	783.23	12,052,735
50	1083.42	16,672,169	1023.10	15,743,969	974.20	14,991,480	933.58	14,366,404

TABLE A.2.1.2 (CONT.)

	900 ft		1,000 ft		1,100 ft		1,200 ft	
	cft/sec	BPD	cft/sec	BPD	cft/sec	BPD	cft/sec	BPD
5	19.37	298,028	18.72	288,098	18.16	279,387	17.65	271,616
10	61.49	946,179	59.44	914,655	57.64	886,998	56.04	862,327
15	120.85	1,859,768	116.83	1,797,806	113.30	1,743,444	110.14	1,694,953
20	195.21	3,003,932	188.70	2,903,850	183.00	2,816,042	177.91	2,737,719
25	283.15	4,357,192	273.71	4,212,024	265.44	4,084,659	258.05	3,971,052
30	383.69	5,904,396	370.91	5,707,680	359.69	5,535,088	349.69	5,381,140
35	496.09	7,634,023	479.56	7,379,681	465.06	7,156,530	452.12	6,957,485
40	619.74	9,536,888	599.09	9,219,149	580.98	8,940,376	564.82	8,691,715
45	754.16	11,605,421	729.04	11,218,764	706.99	10,879,526	687.33	10,576,932
50	898.93	13,833,223	868.98	13,372,343	842.71	12,967,984	819.27	12,607,303

COMMENTS

These calculations show that:

1. As the water depth increases, the volume of entrained water (Q_E) reduces. Also, the rate of increase in Q_E remains constant for all water depths between a given Z_1 and Z_2.
2. For higher values of Z the percentage of the oil and gases (liquid) in the total liquid is negligibly small in comparison to the vol of entrained water. It is more so at shallower water depths. But, for lower values of Z the oil and gas fractions become significant.
3. The results are plotted in Figs. 3.1.1 and 3.1.2 (Sect. 3.1).

COLLECTION RATE USING MILGRAM'S FORMULA: [8]

Collection Effy $P = \left[1 - \exp^{\left(\frac{-A'F'R'}{B'+R'}\right)}\right]^{C'}$

$$F' = \frac{Q_T}{[g(R-D')^5]^{1/2}};$$

$A' = 59.69$, $B' = 6.991$, $C' = 0.3726$, $D' = 0.1112$ m

$E' = 11.77$ $T = 0.072$ N/m, $\rho_w = 1000$ kg/m^3

$L_A' = \frac{Q_A^{0.4}}{g^{0.2}}$; $L_B = \sqrt{\frac{T}{\rho_w g}}$; $R' = \frac{Q_T}{Q_g}\left(1 + E'\frac{L_B}{L_A}\right)$

$Q_g = 27 \times 10^6$ SCF/Day; $Q_{oil} = 30{,}000$ BPD $= 0.0552$ m^3/sec
$= 8.84772$ n m^3/sec

Since there are no mathematical relations in Dr. Milgram's analyses [8] for flow analysis Dr Topham's expression for Q_E will have to be used. The purpose is to see the effect of such variables as h (or z), F, R and water depth, etc. on the total flow rates and collection efficiencies; it is surmized that the error in using two differing mathematical approaches together would not negate a qualitative assessment of these variables. It is realized that quantitatively the results would be meaningless.

The volume of gas at the wellhead can be calculated as

$$Q_{well.} = \frac{Q_{atm} \times P_{atm} \times 9.80}{\text{Water Depth} + P_{atm} \times 9.80}$$; (all in m-kg units)

TABLE A.2.1.3

The calculations are approximate. They can be used to study the trend rather than actual values.

W.D. = 100 ft Q_g = 2.20393 m^3/sec

h	Q_E	Q_T	Q_A	L_A	L_B/L_A	R	R'	F	F'	WOR	P
5 ft	1.05051	1.10571	2.28990	.88225	.00303	.50170	.5196	.12314	.14882	19.031	74.82
10 ft	3.33515	3.39035	2.38286	.89641	.00298	1.53832	1.5923	.06675	.07325	60.42	80.34
15 ft	6.55543	6.61068	2.48368	.91139	.00293	2.99350	3.1029	.04723	.05023	118.76	82.78
20 ft	10.58844	10.64364	2.59341	.92729	.00288	4.82939	4.9931	.03704	.03879	191.82	83.63
25 ft	15.35850	15.41370	2.71328	.94420	.00283	6.99374	7.2267	.03071	.03186	278.23	83.67
30 ft	20.81218	20.86738	2.84477	.96224	.00277	9.46827	9.7770	.02635	.02717	377.03	83.26
35 ft	26.90887	26.96407	2.98966	.98156	.00272	12.23455	12.6262	.02316	.02378	487.48	82.61
40 ft	33.61621	33.67141	3.15010	1.0023	.00266	15.27790	15.7562	.02072	.02120	608.99	81.83
45 ft	40.90750	40.96270	3.32873	1.02465	.00261	18.58622	19.1572	.01877	.01916	741.08	80.96
50 ft	48.76020	48.81540	3.52884	1.04886	.00255	22.14927	22.8141	.01719	.01751	883.34	80.07

Observation:

1. It is interesting to note that P first increases and then decreases with increase in h. In case of 1000' W.D. the P continuously decreases with increase in h.
2. P first increases with increase in D for h < 15ft. Then P decreases with increase in D for any value of h. It shows that "h" must be kept as low as possible for all water depths.
3. In shallower waters h > 15' appears to give better η. In deeper waters, on the other hand, h must be kept low (5 to 15 ft).
4. Q_E, hence Q_T increases as h increases. But, as D increases Q_E decreases for the same h.
5. The results are plotted in Fig 3.1.3 (Sect. 3.1).

Water Depth = 200 ft Q_g = 1.25874 m^3/sec

h	Q_E	Q_T	Q_A	L_A	R'	F'	WOR	P
5'	.87159	.92679	1.28632	.70050	.76932	.12474	15.79	78.49
10'	2.76712	2.82232	1.31514	.70673	2.34188	.06097	50.13	82.60
15'	5.43893	5.49413	1.34528	.71317	4.55712	.04174	98.53	83.98
20'	8.78506	8.84026	1.37683	.71981	7.32972	.03222	159.15	84.00
25'	12.74270	12.79790	1.40990	.72668	10.60692	.02645	230.89	83.38
30'	17.26752	17.32272	1.44460	.73378	14.35134	.02256	312.82	82.4
35'	22.32585	22.38105	1.48105	.74113	18.53446	.01974	404.45	81.37
40'	27.89082	27.94602	1.51938	.74874	23.13342	.01759	505.27	80.22
45'	33.94028	33.99548	1.55975	.75664	28.12927	.01590	614.86	79.07
50'	40.45552	40.51074	1.60233	.76483	33.50594	.01453	732.89	77.93

TABLE A.2.1.3 (CONT..)

Water Depth = 300 ft Q_g = .88093 m^3/sec

h	Q_E	Q_T	Q_A	L_A	R'	F'	WOR	P
5'	.77383	.82903	.89436	.60572	.98991	.11158	14	80.69
10'	2.45677	2.51197	.90819	.60945	2.99853	.05427	44.5	83.78
15'	4.82891	4.88411	.92246	.61326	5.82838	.03711	87.5	84.42
20'	7.79975	7.85495	.93719	.61716	9.37069	.02862	141.3	83.89
25'	11.31351	11.36871	.95240	.62115	13.55828	.02350	204.95	82.86
30'	15.33085	15.33085	.96811	.62522	18.27776	.01996	277.73	81.50
35'	19.82185	19.87705	.98434	.62940	23.69032	.01753	359.10	80.26
40'	24.76266	24.81786	1.00113	.63367	29.56951	.01562	448.6	78.91
45'	30.13364	30.18884	1.01850	.63804	35.95717	.01412	545.9	77.59
50'	35.91816	35.97336	1.03648	.64253	42.83293	.01290	650.7	76.32

Water Depth = 400 ft Q_g = .67757 m^3/sec

h	Q_E	Q_T	Q_A	L_A	R'	F'	WOR	P
5'	.70901	.76421	.68548	.54458	1.19295	.10286	12.84	82.22
10'	2.25096	2.30616	.69358	.54715	3.59906	.04982	40.78	84.48
15'	4.42438	4.47958	.70187	.54975	6.98916	.03403	80.2	84.57
20'	7.14634	7.20154	.71036	.55240	11.23313	.02624	129.5	83.64
25'	10.36574	10.42094	.71907	.55510	16.25057	.02154	187.8	82.31
30'	14.04653	14.10173	.72798	.55785	21.98465	.01836	254.5	80.82
35'	18.16130	18.21650	.73713	.56064	28.39205	.01606	329	79.30
40'	22.68821	22.74341	.74650	.56348	35.43816	.01432	411	77.83
45'	27.60923	27.66443	.75611	.56637	43.09434	.01294	500.2	76.4c
50'	32.90916	32.96436	.76598	.56932	51.33635	.01182	596.2	75.03

TABLE A.2.1.3 (CONT..)

Water Depth = 500 ft Q_g = .55048 m^3/sec

h	Q_E	Q_T	Q_A	L_A	R'	F'	WOR	P
5'	.66158	.71578	.55570	.50073	1.38189	.09634	11.99	83.33
10'	2.10038	2.15558	.56101	.50264	4.16064	.04657	38.05	84.9
15'	4.12841	4.18361	.56642	.50457	8.07327	.03179	74.79	84.6c
20'	6.66829	6.72349	.57194	.50653	12.97163	.02450	120.8	83.35
25'	9.67233	9.72753	.57757	.50852	18.76304	.02010	175.2	81.78
30'	13.10690	13.16210	.58331	.51054	25.38201	.01714	237.4	80.12
35'	16.94642	17.00162	.58916	.51258	32.77863	.01499	307.0	78.47
40'	21.17051	21.22571	.59513	.51465	40.91304	.01336	383.5	76.89
45'	25.76235	25.81755	.60123	.51675	49.75226	.01208	466.7	75.3
50'	30.70774	30.76294	.60745	.51888	59.26842	.01103	556.3	73.9c

Water Depth = 600 ft Q_g = .46354 m^3/sec

h	Q_E	Q_T	Q_A	L_A	R'	F'	WOR	P
5'	.62474	.67994	.46723	.46717	1.56551	.09151	11.3	84.28
10'	1.98341	2.03861	.47098	.46867	4.69281	.04404	35.9	85.27
15'	3.89851	3.95371	.47479	.47018	9.09947	.03004	70.6	84.54
20'	6.29694	6.35214	.47866	.47171	14.61648	.02315	114.1	83.04
25'	9.13369	9.18889	.48260	.47326	21.13962	.01899	165.5	81.28
30'	12.37700	12.43220	.48660	.47483	28.59519	.01619	224.2	79.49
35'	16.00270	16.05790	.49067	.47641	36.9270	.01416	289.9	77.74
40'	19.99155	20.04675	.49480	.47801	46.09027	.01262	362.2	76.08
45'	24.32768	24.38288	.49901	.47963	56.04794	.01140	440.7	74.51
50'	28.99767	29.05287	.50329	.48128	66.76865	.01042	525.3	73.05

TABLE A.2.1.3 (CONT..)

Water Depth = 700 ft Q_g = .40032 m^3/sec

h	Q_E	Q_T	Q_A	L_A	R'	F'	WOR	P
5'	.59493	.65013	.40307	.44037	1.73392	.08750	10.8	84.97
10'	1.88880	1.94400	.40585	.44158	5.20171	.04200	34.2	85.50
15'	3.71253	3.76773	.40868	.44281	10.07974	.02863	67.26	84.46
20'	5.99655	6.05175	.41155	.44405	16.18714	.02205	108.6	82.73
25'	8.69798	8.75318	.41445	.44530	23.40855	.01809	157.6	80.82
30'	11.78656	11.84176	.41740	.44657	31.66239	.01542	213.5	78.91
35'	15.23931	15.29451	.42039	.44784	40.88866	.01349	276.1	77.08
40'	19.03787	19.09307	.42342	.44913	51.03171	.01202	344.9	75.36
45'	23.16715	23.22235	.42650	.45044	62.05665	.01086	419.7	73.74
50'	27.61437	27.66957	.42962	.45175	73.92683	.00992	500.3	72.24

Water Depth = 800 ft Q_g = .35227 m^3/sec

h	Q_E	Q_T	Q_A	L_A	R'	F'	WOR	P
5'	.57011	.62531	.35440	.41828	1.90845	.08416	10.3	85.63
10'	1.80999	1.86159	.35655	.41929	5.68063	.04022	32.8	85.61
15'	3.55763	3.61283	.35873	.42031	11.02266	.02745	64.4	84.34
20'	5.74635	5.80155	.36094	.42135	17.69738	.02114	104.1	82.42
25'	8.33506	8.39026	.36317	.42239	25.58975	.01734	151	80.38
30'	11.29478	11.34998	.36543	.42344	34.61077	.01478	204.6	78.38
35'	14.60345	14.65865	.36772	.42450	44.69256	.01293	264.6	76.48
40'	18.24353	18.29873	.37004	.42556	55.78108	.01152	330.5	74.71
45'	22.20052	22.25572	.37238	.42664	67.83166	.01041	402.2	73.06
50'	26.46218	26.51738	.37476	.42773	80.80636	.00951	479.4	71.53

TABLE A.2.1.3 (CONT.-)

Water Depth = 900 ft Q_g = .31452 m^3/sec

h	Q_E	Q_T	Q_A	L_A	R'	F'	WOR	P
5'	.54897	.60417	.31622	.39963	2.07198	.08132	9.95	86.15
10'	1.74288	1.79808	.31793	.40050	6.16549	.03885	31.6	85.79
15'	3.42572	3.48092	.31966	.40137	11.93395	.02645	62.1	84.21
20'	5.53329	5.58849	.32141	.40224	19.15649	.02037	100.2	82.14
25'	8.02601	8.08121	.32318	.40313	27.69675	.01670	145.4	79.97
30'	10.87599	10.93119	.32497	.40402	37.45851	.01423	197.0	77.88
35'	14.06198	14.11718	.32678	.40492	48.36837	.01245	254.7	75.93
40'	17.56709	17.62229	.32861	.40582	60.36789	.01109	318.2	74.11
45'	21.37736	21.43256	.33046	.40674	73.40873	.01002	387.3	72.43
50'	25.48100	25.53620	.33233	.40766	87.44997	.00916	461.6	70.90

Water Depth = 1,000 ft Q_g = 0.28410 m^3/sec = 10.03 cft/sec

h	Q_E $\frac{m^3}{Sec}$	Q_T $\frac{m^3}{Sec}$	Q_A $\frac{m^3}{Sec}$	L_A	R'	F'	WOR	P
5ft	0.530	0.5852	0.28546	0.38361	2.22858	0.07876	9.6	86.57
10 "	1.6829	1.7381	0.28686	0.38436	6.61838	0.03755	30.5	85.84
15 "	3.30777	3.36297	0.28826	0.38511	12.80280	0.02555	59.92	84.04
20 "	5.34261	5.39781	0.28969	0.38587	20.54717	0.01967	96.80	81.82
25 "	7.74947	7.80467	0.29112	0.3866	29.70261	0.01613	140.4	79.56
30 "	10.50146	10.55866	0.29257	0.3874	40.17922	0.01375	190.24	77.41
35 "	13.57764	13.63284	0.29404	0.3882	51.87186	0.01202	245.97	75.4
40 "	16.96186	17.01706	0.29552	0.38896	64.73444	0.01071	307.28	73.55
45 "	20.64109	20.69629	0.29702	0.38974	78.72199	0.00968	373.9	71.85
50 "	24.60317	24.65837	0.29853	0.39053	93.78224	0.00884	445.7	70.27

TABLE A.2.1.3 (CONT.-)

Water Depth = 1,100 ft Q_g = 0.25901 m^3/sec

h	Q_E	Q_T	Q_A	L_A	R'	F'	WOR	P
5'	0.51456	0.56976	0.26016	0.36963	2.38679	0.07669	9.3	87.00
10'	1.63364	1.68884	0.26132	0.37028	7.07375	0.03649	29.6	85.93
15'	3.21100	3.26620	0.26248	0.37094	13.67866	0.02482	58.17	83.93
20'	5.18647	5.24167	0.26366	0.37161	21.94875	0.01910	93.96	81.57
25'	7.52296	7.57816	0.26485	0.37228	31.72802	0.01586	136.3	79.47
30'	10.19430	10.24950	0.26605	0.37295	42.90627	0.01335	184.7	77.00
35'	13.18060	13.23580	0.26727	0.37363	55.39959	0.01167	238.8	74.95
40'	16.46601	16.52121	0.26849	0.37432	69.14119	0.01040	298.3	73.08
45'	20.03746	20.09266	0.26972	0.3750	84.07580	0.00940	363.0	71.36
50'	23.88390	23.93910	0.27097	0.37569	100.15654	0.00859	432.7	69.78

Water Depth = 1100 ft Q_g = .25901 m^3/sec

h	Q_E	Q_T	Q_A	L_A	R'	F'	WOR	P
5'	.51456	.56976	.26016	.36963	2.38679	.07669	9.3	87.00
10'	1.63364	1.68884	.26132	.37028	7.07375	.03649	29.6	85.93
15'	3.21100	3.26620	.26248	.37094	13.67866	.02482	58.17	83.93
20'	5.18647	5.24167	.26366	.37161	21.94875	.01910	93.96	81.57
25'	7.52296	7.57816	.26485	.37228	31.72802	.01586	136.3	79.47
30'	10.19430	10.24950	.26605	.37295	42.90627	.01335	184.7	77.00
35'	13.18060	13.23580	.26727	.37363	55.39959	.01167	238.8	74.95
40'	16.46601	16.52121	.26849	.37432	69.14119	.01040	298.3	73.08
45'	20.03746	20.09266	.26972	.37500	84.07580	.00940	363.0	71.30
50'	23.88390	23.93910	.27097	.37569	100.15654	.00859	432.7	69.78

TABLE A.2.1.3 (CONT.-)

Water Depth = 1200 ft Q_g = .23801 m^3/sec

h	Q_E	Q_T	Q_A	L_A	R'	F'	WOR	P
5'	.50026	.55546	.23898	.35728	2.53904	.07476	9.06	87.34
10'	1.58823	1.64343	.23995	.35786	7.51124	.03550	28.8	85.9
15'	3.12175	3.17695	.24094	.35845	14.51820	.02414	56.6	83.7
20'	5.04231	5.09751	.24193	.35904	23.29181	.01858	91.3	81.31
25'	7.31385	7.36905	.24293	.35963	33.66658	.01523	132.5	78.88
30'	9.91094	9.96614	.24394	.36023	45.52570	.01298	179.5	76.61
35'	12.81423	12.86943	.24496	.36083	58.78017	.01135	232.1	74.52
40'	16.00833	16.06353	.24599	.36144	73.35913	.01011	290.0	72.61
45'	19.48050	19.53570	.24702	.36204	89.20396	.00914	352.9	70.88
50'	23.22002	23.27522	.24806	.36265	106.26648	.00835	420.7	69.29

Comments

The foregoing calculations show that based on the analytical approach taken a collection efficiency of 95% can not be achieved for the blowout data specified. Again it should be noted that the calculations are not exact. However, certain theoretical inferences can be drawn. The efficiency can be increased by:

1. Reducing the gas by letting it spill out. This is not allowable due to hazard.
2. Increasing F' by reducing h below 5 ft. This may or may not be possible depending upon debri and height of wellhead eqpt.
3. Increasing both F' and R' which will be a combination of (1) and (2) with the same probl.
4. If Q_T is increased to increase F' then R' will also increase by the same proportion. However, a fraction of it would contribute to the increase in P. For example, a 10% increase in Q_T would increase P by about 3%. In order to reach ~ 95% at, say h = 15 ft the increase in Q_T must be atleast 40%. That can not be achieved easily. A double collector might help some. A lower Q_g would result in higher R' but not F'. Therefore, the increase in P due to higher R' would be marginal, unless R' is very large. But at the same time Q_T also drops with Q_g which would decrease (slightly) the increase in R' and F'.

For P = 95 % or higher

$$P = 100\left[1 - e^{\frac{-A'R'F'}{B'+R'}}\right]^{c'}$$

$$\left(1 - e^{\frac{-A'R'F'}{B'+R'}}\right) = (0.95)^{1/c'} = (0.95)^{2.68384}$$

$$= 0.87139$$

$$e^{\frac{-A'R'F'}{B'+R'}} = 1 - 0.87139 = 0.12861$$

$$\frac{-A'R'F'}{B'+R'} = \frac{\ln 0.12861}{\ln e} = -2.05099$$

$$\frac{A'R'F'}{B'+R'} = 2.05099$$

$$\frac{R'F'}{B'+R'} = \frac{2.05099}{59.69} = 0.03436$$

$$R'F' = 0.03436\,B' + 0.03436\,R'$$

$$R'(F' - 0.03436) = .03436 \times 6.991$$

$$= 0.24022$$

$$\boxed{R' = \frac{0.24022}{F' - 0.03436}} \quad -(1)$$

Therefore, For P = .95, F' must be > .03436

Similarly, for

P =	.96	" .03796
	.97	" .04263
	.98	" .04928
	.99	" .06075
	.995	.07229
	.996	.07602
	.997	.08020
	.998	.08760
	.999	.09920
	.9999	.13776

Now, $F' = \dfrac{Q_T \times (3.281)^{5/2}}{[g(h-D'')^5]^{1/2}}$, and $R' = \dfrac{Q_T}{Q_g}\left(1 + E'\dfrac{L_B}{L_A}\right)$

$D'' = 3.281 D'$

Although Q_T is also believed to be a function of h, it can be eliminated from a relationship between F' and R'.

$$R' = \frac{Q_T}{Q_g}\left(1 + E'\frac{L_B}{L_A}\right)$$

If Q_A is small but >0, L_A will be smaller and R' will be larger.

But $L_A = \dfrac{Q_A^{0.4}}{g^{0.2}}$, and $Q_A = \dfrac{D + 33.17275}{D + 33.17275 - h} Q_g$ if all gas enters the riser

For a given water depth, Q_g and D are fixed. Therefore, Q_A remains a function of h only. It may be noticed that for $D \gg h$ (deep waters) $Q_A \sim Q_g$. But in shallower waters $Q_A - Q_g$ becomes significant.

Also, $$Q_T = F'[g(h-D'')^5]^{1/2} \times \frac{1}{19.49915}$$

Therefore, $$R' = \frac{F'[g(h-D'')^5]^{1/2}}{19.49915\, Q_g}\left[1 + E'\frac{L_B}{L_A}\right]$$

$$\frac{L_B}{L_A} = \frac{L_B \times g^{.2}}{\left(\frac{K}{K-h}\cdot Q_g\right)^{.4}} \quad \text{where } K = D + 33.17275$$

$$= \frac{L_B\, g^{.2}}{Q_g^{.4}} \times \left(\frac{K-h}{K}\right)^{.4} = \frac{L_B\, g^{.2}}{Q_g^{.4}}\left[1 - \frac{h}{K}\right]^{.4}$$

$$R' = \frac{F'[g(h-D'')^5]^{1/2}}{19.49915\, Q_g}\left[1 + E'\left\{\frac{L_B\, g^{.2}}{Q_g^{.4}}\left(1 - \frac{h}{K}\right)^{.4}\right\}\right]$$

In this expression, g, D'', E' and L_B are constants regardless of Q_g, K and h. Therefor

$$R' = \frac{F'[9.81(h-.36485)^5]^{1/2}}{19.49915\,Q_g}\left[1+11.77\left\{\frac{.00267\times(9.81)^2}{Q_g^4}\times(1-\frac{h}{K})^4\right\}\right]$$

$$= \frac{F'[9.81(h-.36485)^5]^{1/2}}{19.49915\,Q_g}\left[1+\frac{0.04962}{Q_g^4}(1-\frac{h}{K})^4\right] \quad \text{--- (2)}$$

For a given water depth Q_g and K are fixed. Thus, for a 95% or higher η, F ~~must be~~ greater than 0.03436 would have same number of values of R' for every value of $h > 0.36485$

Let eq^n (1) be generalized as

$$R' = \frac{-B'/A' \ln(1-P^{1/c'})}{F' + 1/A' \ln(1-P^{1/c'})}$$

Thus, for any value of $P < 1$,

F' must be $> \left|\frac{1}{A'}\ln(1-P^{1/c'})\right|$

$> \left|0.01675 \ln(1-P^{2.68384})\right|$

$$R' = \frac{-0.11712 \ln(1-P^{2.68384})}{F' + 0.01675 \ln(1-P^{2.68384})} \quad \text{--- (3)}$$

In expressions (2) and (3) the R' must be the same for a given set of conditions.

Therefore,

$$\frac{-0.11712 \ln(1-P^{2.68384})}{F' + 0.01675 \ln(1-P^{2.68384})} = \frac{F'[9.81(h-.36485)^5]^{1/2}}{19.49915 Q_g} \times \left[1 + \frac{0.04962}{Q_g^{.4}}\left(1-\frac{h}{K}\right)^{.4}\right]$$

In a quadratic form this can be expressed as

$$F'^2 ab + F' aby - x = 0$$

$$F' = \frac{-aby \pm \sqrt{(aby)^2 + 4abx}}{2ab} \quad ---④$$

The root radical would always be bigger. Therefore, -ve sign can be discarded.

where $a = \frac{1}{Q_g}[9.81(h-.36485)^5]^{1/2} \times \frac{1}{19.49}$

$b = \left[1 + \frac{0.04962}{Q_g^{.4}}\left(1-\frac{h}{K}\right)^{.4}\right]$

$x = -0.11712 \ln(1-P^{2.68384})$

$y = 0.01675 \ln(1-P^{2.68384})$

$K = D + 33.17275$

From Eqn ④ a set of values for F' can be calculated corresponding to various h's for a given water depth.

Thus, for 100 ft W.D., $Q_g = 2.20393$ m³/sec

$$K = 133.17275$$

$$\ell = \left[1 + .03617\left(1 - \frac{h}{133.17275}\right)^{.4}\right]$$

Now, for $P = 0.95$

$$x = 0.24021$$

$$y = -0.03435$$

TABLE A.2.1.4

h	a	ℓ	F'	R'
5 ft	3.37117	1.03562	.28004	.97772
10 ft	21.00232	1.03506	.12369	2.68880
15 ft	59.71920	1.03448	.08185	5.05752
20 ft	124.51067	1.03074	.06372	8.17995
25 ft	219.53767	1.03328	.05397	12.24574
30 ft	348.44870	1.03266	.04820	17.34890
35 ft	514.53357	1.03202	.04451	23.65234
40 ft	720.81248	1.03135	.04204	31.25340
45 ft	970.09334	1.03067	.04031	40.33146
50 ft	1265.01121	1.02996	.03907	50.93614

Thus, for 100 ft W.D., F' is always $> .03435$

These values for F' and R' are for a fixed value of P, Q_g, and D. Also, it is assumed that all the gas is entering the riser. If a portion of the gas is allowed to spill over, thereby reducing Q_A, then R' will be larger. The effect of Q_A on R' will be seen later.

For 500 ft W.D., Q_g = .55048 m^3/sec.

P = .95

x = .24021

y = −.03435

TABLE A.2.1.4 (CONT.)

h	a	q	F'	R'
5 ft	13.49698	1.06277	.14772	2.11891
10 ft	84.08596	1.06253	.07180	6.41490
15 ft	239.09485	1.06229	.05240	13.31113
20 ft	498.49733	1.06205	.04454	23.58268
25 ft	878.95230	1.06180	.04068	37.97250
30 ft	1395.06712	1.06156	.03856	57.11251
35 ft	2060.01300	1.06131	.03730	81.53994
40 ft	2885.88184	1.06107	.03650	111.93778
45 ft	3883.91553	1.06082	.03597	148.65140
50 ft	5064.66384	1.06057	.03561	191.26051

For 1,000 ft W.D., Q_g = 0.28408 m^3/sec.

P, x and y remain unchanged

h	a	q	F'	R'
5 ft	26.15397	1.08193	.11090	3.13814
10 ft	162.93874	1.08177	.05789	10.20617
15 ft	463.30940	1.08161	.04500	22.56370
20 ft	965.37019	1.08145	.04009	41.87836
25 ft	1703.20214	1.08129	.03780	69.70863
30 ft	2703.31087	1.08113	.03660	106.95377
35 ft	3991.81905	1.08096	.03590	155.38232
40 ft	5592.15797	1.08080	.03547	215.25505
45 ft	7526.11173	1.08064	.03519	287.35519
50 ft	9814.12332	1.08048	.03500	371.87924

TABLE A.2.1.4 (CONT.)

For $P = 0.96$

$x = 0.26534$

$y = -.03795$

a^s and b^s remain unchanged.

h	100 ft		500 ft		1000 ft	
	F'	R'	F'	R'	F'	R'
5ft	.29531	1.03101	.15630	2.24199	.11765	3.32920
10ft	.13107	2.84942	.07668	6.85078	.06217	10.95473
15ft	.08720	5.38748	.05645	14.34149	.04880	24.45157
20ft	.06825	8.75668	.04832	25.58317	.04376	45.65607

TABLE A.2.1.5

As P increases, F and R' must increase.

The table below shows the % changes in P, F' and R':

P	100 ft		500 ft		1000 ft		
	F'	R'	F	R'	F	R'	
.90 (base)	.22886	.79899	.11934	1.71175	.08879	2.51236	
+2%	+6.685%	6.687%	+7.055%	7.059%	+7.348%	+7.351%	
+4%	+14.703	14.708	+15.577	16.334	+16.270	16.277	h=5
+6%	+24.884	24.887	+26.487	26.502	+27.764	27.772	
+8%	+39.255	39.256	+42.065	42.076	+44.306	44.311	
+10%	+66.250	66.252	+71.862	71.877	+76.364	76.371	
.90	.09941	2.16098	.05617	5.01847	.04443	7.82934	
+2%	+7.223%	+7.227%	+8.105%	+8.112%	+8.749%	+8.757%	
+4%	15.975	15.981	18.067	18.075	19.595	19.605	h=
+6%	27.221	27.226	31.081	31.097	33.908	33.925	
+8%	43.349	43.353	50.159	50.169	55.152	55.157	
+10%	74.437	74.444	88.194	88.207	98.287	98.290	

TABLE A.2.1.5 (CONT..)

P	100 ft F'	100 ft R'	500 ft F'	500 ft R'	1,000 ft F'	1,000 ft R'
.90	.06459	3.99086	.03973	10.09239	.03330	16.69381
+2%	+7.828%	+7.812%	+9.157%	+9.169%	+10.003%	+10.033%
+4%	17.398	17.383	20.564	20.580	22.567	22.591
+6%	29.839	29.826	35.698	35.728	39.383	39.444
+8%	47.958	47.939	58.308	58.330	64.772	64.825
+10%	83.731	83.708	104.637	104.676	117.515	117.618

F: 15

Observations

1. For a given increase in P the F' & R' must increase by nearly equal amounts.
2. The % increase in F' and R' increases fractionally as water depth increases for the same P.
3. The % increase in F' and R' increases substantially as P increases for the same water depth.
4. Also, both F' and R' increase significantly with increase in h for any water depth for the same increase in P.
5. Exactly or nearly equal percent increases in F' and R' are not achievable in practice (as can be seen from the following calculations).

F' and R'

$F' \propto Q_T$, and

$\propto \frac{1}{h^{5/2}}$

For a given change in Q_T there is an equal change in F'. But, for every change in h, there is a much larger change in F' if Q_T remains constant. However, since $Q_T = f(h)$, the change in F' due to a change in h would be compounded.

If we assume the validity of the equation

$$Q_E = .4 Q_g^{1/3} h^{5/3}$$

then $$Q_T = .4 Q_g^{1/3} h^{5/3} + Q_{oil}$$

and $$F' = \frac{.4 Q_g^{1/3} h^{5/3} + Q_{oil}}{[g(h-D')^5]^{1/2}}$$

But Q_g is a function of water depth.

$$Q_g = \frac{Q_{atm} \times 33.17275}{D + 33.17275}$$

$$= \frac{8.84772 \times 33.17275}{D + 33.17275}$$

$$= \frac{293.5032}{D + 33.17275}$$

$$F' = \frac{\left[.4\left(\frac{293.5032}{D+33.17275}\right)^{1/3}\left(\frac{h}{3.281}\right)^{5/3} + Q_{oil}\right] \times (3.281$$

$$[g(h - 3.281 D')^5]^{1/2}$$

$$= \frac{\left[2.65826\, h^{5/3} + Q_{oil}(D+33.17275)^{1/3} \times (3.281)^{5/3}\right] \times (3.281$$

$$[g(h - .36485)^5]^{1/2} \times (D+33.17275)^{1/3} \times (3.281)^{5/}$$

$$F' = \frac{\left[2.65826\, h^{5/3} + Q_{oil}(D+33.17275)^{1/3} \times (3.281)^{5/3}\right]^{2.69}}{\left[g(h-.36485)^5\right]^{1/2} \times (D+33.17275)^{1/3}}$$

The values of F' for a given D and h will be the same as calculated earlier. As can be seen, F' decreases with an increase in h.

TABLE A.2.1.6

h	F'	
5 ft (base)	.14882	For D = 100 ft
+100 %	− 50.78 %	
+200 %	− 66.25 %	
+300 %	− 73.94 %	
+400 %	− 78.59 %	
+500 %	− 81.74 %	
5 ft	.09634	D = 500 ft
+100 %	− 51.66 %	
+200 %	− 67.00 %	
+300 %	− 74.57 %	
+400 %	− 79.14 %	
+500 %	− 82.21 %	
5 ft	.07876	D = 1,000 ft
+100 %	− 52.32 %	
+200 %	− 67.56 %	
+300 %	− 75.03 %	
+400 %	− 79.52 %	
+500 %	− 82.54 %	

The above figures show why F' must increase at a greater rate for higher P when h increases.

In case of R',

$$R' \propto Q_T\left(1+\frac{K}{Q_A}\right)$$ for a given Q_g and D.

Like Q_g, Q_A also depends upon D and h. But unlike Q_g, Q_A is also affected by the conditions that cause some of the gas to spill over. This amount can not be expressed in a mathematical form. At the same time Q_A may also affect Q_T. However, as noted from previous calculations, the effect of the $\left(1+\frac{K}{Q_A}\right)$ term is between 3 to 8 % corresponding to 100 to 1000 ft water depth, and practically independent of h. On the other hand, the effect of variation in Q_T on R' is one to one, which, in turn, is affected by h. Thus,

h	Q_T	R'	
5 ft (base)	1.10571	.5196	
+100 %	+206.62 %	+206.45 %	D = 100 ft
+200 %	+497.87 %	+497.17 %	
+300 %	+862.61 %	+860.95 %	
+400 %	+1294.00 %	+1290.82 %	

This shows that Q_T and R' change almost equally. This is true for any water depth, although the

percentage variation would drop somewhat with increase in water depth.

It is also interesting to note that F' decreases as h increases; but R' increases exponentially with h, which more than compensates for drop in F'. Theoretically, either F' or R' can be held constant while the other is varied to arrive at a desired value of P. But it is not possible in practice. With any change in h, both F' and R' would change by different amounts. As seen from foregoing calculations, both F' and R' are required to increase by nearly equal proportion for any increase in P regardless of the water depth and h. Of course, the proportions, themselves, increase with D and/or h.

Even if h were to be kept constant, Q_T would be affected by many variables such as:

- Gas flow rate
- Amount of oil in the plume
- Amount of gas entering the riser
- Riser size and configuration

However, in that case, the changes in F' and R' will be almost directly in proportion to changes in Q_T (as can be seen from the figures below) But, varying Q_T at will may not always be possible. By providing some back pressure control Q_T can be regulated somewhat (through

Velocity regulation).

For a fixed h (say 20 ft), F' and R' would have the following variations with water depth.

TABLE A.2.1.7

$\frac{A'F'R'}{B'+R'}$	P	D	%	Q_T	%	F'	%	R'	%
.96469	83.63	100 ft	Base	10.64364	Base	.03879	Base	4.9931	Base
.98435	84.00	200	+ 100%	8.84026	− 16.94	.03222	− 16.94	7.32972	+ 46.80
.97840	83.89	300	+ 200%	7.85495	− 26.20	.02862	− 26.20	9.37069	+ 87.67
.96543	83.64	400	+ 300%	7.20154	− 32.34	.02624	− 32.34	11.23313	+ 124.97
.95026	83.35	500	+ 400%	6.72349	− 36.83	.02450	− 36.83	12.97163	+ 159.79
.93474	83.04	600	+ 500%	6.35214	− 40.32	.02315	− 40.32	14.61648	+ 192.73
.91918	82.73	700	+ 600%	6.05175	− 43.14	.02205	− 43.14	16.18714	+ 224.19
.90453	82.42	800	+ 700%	5.80155	− 45.49	.02114	− 45.49	17.69738	+ 254.44
.89080	82.14	900	+ 800%	5.58849	− 47.49	.02037	− 47.49	19.15649	+ 283.66
.87604	81.82	1000	+ 900%	5.39781	− 49.29	.01967	− 49.29	20.54717	+ 311.51
.86467	81.57	1100	+ 1000%	5.24167	− 50.75	.01910	− 50.75	21.94875	+ 339.58
.85301	81.31	1200	+ 1100%	5.09751	− 52.11	.01858	− 52.11	23.29181	+ 366.48

If Q_T can be varied at will, then for a fixed D and h (say 1,000 ft and 20 ft) the F' and R' would be:

Q_T	F'	R'	P
5.39781 Base	.01967	20.54717	81.82
+ 100 %	.03934	41.09700	94.76
+ 200 %	.05901	61.64550	98.40
+ 300 %	.07868	82.19400	99.51
+ 400 %	.09835	102.74250	99.85
+ 500 %	.11802	123.29101	99.95

This shows that by increasing Q_T any desired P can be achieved. But, Q_T is not easily controllable.

REVISED ANALYSIS

Topham's Revised Theories (Topham & Rowe)

① $$Q_{pth} = \pi\left(\frac{6\alpha}{5}\right)\left[\frac{9\alpha}{10}\cdot\frac{2(1+\lambda^2)\,g\,Q_g}{\pi}\right]^{1/3}(h+z_o)^{5/3}$$

② $$Q_T = Q_{pmh}\left[1-e^{-a^2/l^2}\right]$$

③ $$P_m = 100\left[1-e^{\frac{-1+\lambda^2}{\lambda^2}\cdot\frac{a^2}{l^2}}\right]$$ ← General

④ $$P_m = 100\left[1-\left(1-\frac{F''^{2/3}\cdot R^{1/3}}{K_8}\right)^2\right]$$ For $Q_{pth}=Q_{pmh}$ and $\lambda=1$

⑤ $$F'' = \frac{Q_T}{\left[g(h+z_o)^5\right]^{1/2}} \qquad R=\frac{Q_T}{Q_g}$$

⑥ $$\frac{z_o}{d_o} = 35\,F_o^{-1/5}$$ For $F_o > 1.0$

⑦ $$= 40\,F_o^{-1/2}$$ For $F_o < 1.0$

⑧ $$F_o = \frac{Q_g}{(g\,d_o^5)^{1/2}}$$

⑨ $$l = \frac{6}{5}\alpha(h+z_o)$$

⑩ $$\frac{a^2}{l^2} = \frac{-\lambda^2\ln(1-P_m)}{1+\lambda^2}$$

d_o	F_o
5 cm	571.13725 Q_g
10 cm	100.96376 Q_g
15 cm	36.63847 Q_g
20 cm	17.84804 Q_g

Since all these values (for given data) would be > 1.0, therefore only the Eqn ⑥ is to be used.

The values of F_o would depend upon Q_g which would depend upon water depth.

Out of Q_T and P_m one must be assumed to calculate the other, unless the radius "a" is given or assumed.

Now, $Q_T = Q_{pmh}\left[1 - e^{-\frac{a^2}{\ell^2}}\right]$ shows that:

If $e^{-a^2/\ell^2} = 1$, then $\frac{a^2}{\ell^2} = 0$, and $Q_T = 0$
If $e^{-a^2/\ell^2} < 1$, then $a \gtrless \ell$, and $Q_T < Q_{pmh}$
If $e^{-a^2/\ell^2} > 1$, then $-\frac{a^2}{\ell^2} > 0$ and $Q_T < 0$ which are impossible
If $e^{-a^2/\ell^2} = 0$ then $\frac{a^2}{\ell^2} = \infty$; therefore Q_T can never be equal to Q_{pmh}.

Thus, the only satisfactory condition is for $e^{-a^2/\ell^2} < 1$, $a < \ell$ and $Q_T < Q_{mph}$.

The condition $a < \ell$ implies that all the plume flow can not go through the riser. Such a condition is not only undesirable it is somewhat unrealistic also.

If $a = \ell$, then $e^{-a^2/\ell^2} = \frac{1}{e} < 1$ which means the same, i.e. $Q_T < Q_{pmh}$. The condition $e^{-a^2/\ell^2} \leq 0$, giving $Q_T \geq Q_{pmh}$ is not possible.

It can be seen that if $a < \ell$, then $e^{-a^2/\ell^2} > \frac{1}{e}$ $(= 0.36788)$; and if $a > \ell$, then $e^{-a^2/\ell^2} < \frac{1}{e}$. In the latter case $Q_T - Q_{pmh}$ increases. This implies that in order to make $Q_T - Q_{mph} \to 0$, $a >> \ell$, and $e^{-a^2/\ell^2} << \frac{1}{e}$. An $a > 3\ell$ would amount to $Q_T \simeq Q_{mph}$. Whether this is practical or not would depend upon ℓ. It should be remembered, though, that ℓ can be small if h and

Z_o are small. For a given blowout situation Z_o would be fixed and uncontrollable. That leaves only h, and once again it shows that h must be kept as small as possible.

In practice 2a must be ≤ riser dia (inside). Thus, a limit on h can be set based on given GOR and standard wellbore diameters.

The width of the plume above the wellhead is:

$$\underline{\ell} = \frac{6}{5}\alpha(h + Z_o)$$

$$= \frac{6}{5}\alpha(h + 35\, d_o F_o^{-1/5})$$

$$= \frac{6}{5}\alpha\left[h + 35\, d_o\left(\frac{Q_g}{g^{1/2} d_o^{5/2}}\right)^{-1/5}\right]$$

$$= \frac{6}{5}\alpha\left[h + 35\, d_o\left(\frac{Q_g^{-1/5}}{g^{-1/10} \cdot d_o^{-1/2}}\right)\right]$$

$$= \frac{6}{5}\alpha\left[h + 35\, \frac{d_o^{3/2}\, g^{1/10}}{Q_g^{1/5}}\right]$$

The value of ℓ is dependent upon h, d_o, Q_g and water depth; and it can be seen that ℓ will be smaller in shallower water depths. However, for ℓ to be less than a practical riser diameter, $h \leq 0$, and water depth is less than even 100 ft. If d_o is small (say 10 in) then deeper than 100 ft water depths may be alright. What it means, if the analysis is valid, that entire plume can not be contained. It is questionable

TABLE A.2.1.8

ANLS (33)

$$h_b = \frac{6}{5}\alpha\left(h + 35\frac{d_o^{3/2} g^{1/10}}{\Theta_j^{1/5}}\right)$$

$\alpha = .07$ to $.10$

Values for h_b can be 87.5% to 125% of those listed below.

$\alpha = 0.08$ $\quad d_o = 0.1\,m$

h_b

h	100′	200′	300′	400′	500′	600′	700′	800′	900′	1000′
5ft	10.25"	10.78"	11.15"	11.44"	11.68"	11.89"	12.07"	12.24	12.38"	12.52"
10ft	16.01"	16.54"	16.91"	17.20"	17.44"	17.65"	17.83"	18.00	18.14"	18.28"
15ft	21.77"	22.30"	22.67"	22.96"	23.20"	23.41"	23.59"	23.76	23.90"	24.04"
20ft	27.53"	28.06"	28.43"	28.72"	28.96"	29.17"	29.35"	29.52"	29.66"	29.80"
25ft	33.29"	33.82"	34.19"	34.48"	34.72"	34.93"	35.11"	35.28"	35.42"	35.56"
30ft	39.05"	39.58"	39.95"	40.24"	40.48"	40.69"	40.87"	41.04"	41.18"	41.32"
35ft	44.81"	45.34"	45.71"	46.00"	46.24"	46.45"	46.63"	46.80"	46.94"	47.08"
40ft	50.57"	51.10"	51.47"	51.76"	52.00"	52.21"	52.39"	52.56"	52.70"	52.84"
45ft	56.33"	56.86"	57.23"	57.52"	57.76"	57.97"	58.15"	58.32"	58.46"	58.60"
50ft	62.09"	62.62"	62.99"	63.28"	63.52"	63.73"	63.91"	64.08"	64.22"	64.36"

	$\alpha = 0.08$, $d_o = 0.15\,m$					$\alpha = 0.08$, $d_o = 0.20\,m$				
	100ft	300ft	500ft	700ft	1000ft	100ft	300ft	500ft	700ft	1000ft
5ft	14.01"	15.66"	16.64"	17.36"	18.18"	18.45"	21.01	22.51"	23.61"	24.88"
10 "	19.77"	21.42"	22.40"	23.12"	23.94"	24.21"	26.77"	28.27"	29.37"	30.64"
15 "	25.53"	27.18"	28.16"	28.88"	29.70"	29.97"	32.53"	34.03"	35.13"	36.40"
20 "	31.29"	32.94"	33.92"	34.64"	35.46"	35.73"	38.29"	39.79"	40.89"	42.16"
25 "	37.05"	38.70"	39.68"	40.40"	41.22"	41.49"	44.05"	45.55"	46.65"	47.92"
30 "	42.81"	44.46"	45.44"	46.16"	46.98"	47.25"	49.81"	51.31"	52.41"	53.68"
35 "	48.57"	50.22"	51.20"	51.92"	52.74"	53.01"	55.57"	57.07"	58.17"	59.44"
40 "	54.33"	55.98"	56.96"	57.68"	58.50"	58.77"	61.33"	62.83"	63.93"	65.20"
45 "	60.09"	61.74"	62.72"	63.44"	64.26"	64.53	67.09"	68.59"	69.69"	70.96"
50 "	65.85"	67.50"	68.48"	69.20"	70.02"	70.29"	72.85	74.35"	75.45"	76.72"

TABLE A.2.1.9

ANLS (34)

$$Z_o = 35 d_o F_o^{-1/5} = 35 d_o \left(\frac{Q_g}{g^{1/2} d_o^{5/2}}\right)^{-1/5}$$

$$= 35 d_o^{3/2} g^{1/10} Q_g^{-1/5}$$

	$d_o = .10$ m		$d_o = .15$ m		$d_o = .20$ m	
Water Depth	F_o	Z_o	F_o	Z_o	F_o	Z_o
100 ft	222.517	1.1874	80.749	2.1814	39.336	3.3585
200 ft	127.087	1.3282	46.118	2.4400	22.466	3.7566
300 ft	88.942	1.4264	32.276	2.6205	15.723	4.0345
400 ft	68.410	1.5033	24.825	2.7617	12.093	4.2520
500 ft	55.579	1.5671	20.169	2.8789	9.825	4.4327
600 ft	46.801	1.6219	16.983	2.9796	8.273	4.5874
700 ft	40.418	1.6701	14.667	3.0683	7.145	4.7239
800 ft	35.567	1.7134	12.907	3.1477	6.287	4.8462
900 ft	31.755	1.7527	11.524	3.2199	5.614	4.9574
1000 ft	28.682	1.7887	10.408	3.2861	5.070	5.0593

TABLE A.2.1.10

$1\ m^3/sec = 543{,}520$ BPD

$\lambda = 0.6$ | $\alpha = 0.08$ $d_o = 0.10\ m$
Water Depth = 100 ft; $Q_g = 2.20393\ m^3/sec$; $F_o = 222.517$ $Z_o = 1.1874\ m$

h ft	Q_{pth} m^3/sec	$P_m = .90$		$P_m = .92$		$P_m = .95$		$P_m = .97$		$P_m = .99$	
		a^2/e^2	Q_T	a^2/e^2	Q_T	a^2/e^2	Q_T	a^2/e^2	Q_T	a^2/e^2	Q_T
5	1.75627	.60951	.80153	.66858	.85629	.79299	.96518	.92821	1.06208	1.21902	1.23726
10	3.69335	"	1.68558	"	1.80074	"	2.02215	"	2.23351	"	2.60189
15	6.16438	"	2.81331	"	3.00552	"	3.37506	"	3.72784	"	4.34268
20	9.11625	"	4.16049	"	4.44474	"	4.99123	"	5.51294	"	6.42221
25	12.51232	"	5.71039	"	6.10053	"	6.85061	"	7.56668	"	8.81467
30	16.32512	"	7.45048	"	7.95950	"	8.93815	"	9.87242	"	11.50070
35	20.53293	"	9.37085	"	10.01107	"	11.24197	"	12.41704	"	14.46502
40	25.11797	"	11.46338	"	12.24656	"	13.75232	"	15.18979	"	17.69508
45	30.06529	"	13.72124	"	14.65869	"	16.46102	"	18.18162	"	21.18037
50	35.36206	"	16.13859	"	17.24119	"	19.36105	"	21.38478	"	24.91183

$\alpha = 0.08$ $d_o = 0.10\ m$
$\lambda = 0.6$ | Water Depth = 200 ft; $Q_g = 1.25874\ m^3/sec$; $F_o = 127.087$ $Z_o = 1.3282\ m$

h ft	Q_{pth} m^3/sec	$P_m = .90$		$P_m = .92$		$P_m = .95$		$P_m = .97$		$P_m = .99$	
		a^2/e^2	Q_T	a^2/e^2	Q_T	a^2/e^2	Q_T	a^2/e^2	Q_T	a^2/e^2	Q_T
5	1.58544	.60951	.72357	.66858	.77300	.79299	.86804	.92821	.95878	1.21902	1.11691
10	3.23598	"	1.47684	"	1.57774	"	1.77173	"	1.95692	"	2.27968
15	5.32458	"	2.43004	"	2.59606	"	2.91526	"	3.21998	"	3.75106
20	7.80888	"	3.56383	"	3.80731	"	4.27543	"	4.72233	"	5.50119
25	10.65936	"	4.86474	"	5.19710	"	5.83610	"	6.44612	"	7.50930
30	13.85375	"	6.32260	"	6.75456	"	7.58506	"	8.37789	"	9.75968
35	17.37440	"	7.92936	"	8.47109	"	9.51264	"	10.50696	"	12.23990
40	21.20679	"	9.67839	"	10.33962	"	11.61092	"	12.82455	"	14.93974
45	25.33872	"	11.56413	"	12.35419	"	13.87318	"	15.32329	"	17.85060
50	29.75967	"	13.58177	"	14.50968	"	16.29369	"	17.99680	"	20.96506

TABLE A.2.1.10 (CONT...)

$\alpha = 0.08$ $d = 0.10$ m

$\lambda = 0.60$ | Water Depth = 400 ft; $Q_g = .67757\ m^3/sec$; $F_o = 68.410$ $Z_o = 1.5033$ m

h ft	Q_{pth} m^3/sec	$P_m = .90$		$P_m = .92$		$P_m = .95$		$P_m = .97$		$P_m = .99$	
		a^2/e^2	Q_T	a^2/e^2	Q_T	a^2/e^2	Q_T	a^2/e^2	Q_T	a^2/e^2	Q_T
5	1.42435	.60951	.65005	.66858	.69446	.79299	.77984	.92821	.86136	1.21902	1.00343
10	2.81024	"	1.28254	"	1.37017	"	1.53863	"	1.69946	"	1.97975
15	4.54772	"	2.07550	"	2.21730	"	2.48992	"	2.75018	"	3.20378
20	6.60392	"	3.01391	"	3.21982	"	3.61571	"	3.99364	"	4.65233
25	8.95567	"	4.08720	"	4.36644	"	4.90331	"	5.41584	"	6.30908
30	11.58537	"	5.28735	"	5.64858	"	6.34310	"	7.00611	"	8.16165
35	14.47899	"	6.60795	"	7.05940	"	7.92738	"	8.75600	"	10.20015
40	17.62499	"	8.04372	"	8.59327	"	9.64984	"	10.65850	"	12.41644
45	21.01359	"	9.59022	"	10.24543	"	11.50514	"	12.70772	"	14.80364
50	24.63641	"	11.24360	"	12.0177	"	13.48866	"	14.89857	"	17.35583

$\alpha = .08$ $d = 0.10$ m

$\lambda = 0.6$ | Water Depth = 600 ft; $Q_g = .46354\ m^3/sec$; $F_o = 46.801$ $Z_o = 1.6219$ m

h ft	Q_{pth} m^3/sec	$P_m = .90$		$P_m = .92$		$P_m = .95$		$P_m = .97$		$P_m = .99$	
		a^2/e^2	Q_T	a^2/e^2	Q_T	a^2/e^2	Q_T	a^2/e^2	Q_T	a^2/e^2	Q_T
5	1.33806	.60951	.61067	.66858	.65239	.79299	.73260	.92821	.80918	1.21902	.94264
10	2.58469	"	1.17960	"	1.26020	"	1.41514	"	1.56306	"	1.82086
15	4.13840	"	1.88869	"	2.01773	"	2.26581	"	2.50265	"	2.91542
20	5.97112	"	2.72511	"	2.91129	"	3.26925	"	3.61097	"	4.20653
25	8.06291	"	3.67976	"	3.93117	"	4.41452	"	4.87595	"	5.68015
30	10.39855	"	4.74571	"	5.06993	"	5.69330	"	6.28840	"	7.32556
35	12.96588	"	5.91739	"	6.32167	"	7.09894	"	7.84096	"	9.13419
40	15.75487	"	7.19023	"	7.68147	"	8.62594	"	9.52757	"	11.09897
45	18.75701	"	8.56036	"	9.14520	"	10.26964	"	11.34308	"	13.21392
50	21.96499	"	10.02442	"	10.70929	"	12.02603	"	13.28306	"	15.47388

TABLE A.2.1.10 (CONT..)

$\alpha = 0.08$ $d = 0.10\ m$

$\lambda = 0.60$ Water Depth = 800 ft; $Q_g = .35227\ m^3/sec$; $F_o = 35.567$ $Z_o = 1.7134\ m$

h ft	Q_{pth} m^3/sec	$P_m = .90$		$P_m = .92$		$P_m = .95$		$P_m = .97$		$P_m = .99$	
		a^2/e^2	Q_T	a^2/e^2	Q_T	a^2/e^2	Q_T	a^2/e^2	Q_T	a^2/e^2	Q_T
5	1.28083	.60951	.58455	.66858	.62448	.79299	.70127	.92821	.77457	1.21902	.90232
10	2.43622	"	1.11185	"	1.18781	"	1.33385	"	1.47328	"	1.71627
15	3.87000	"	1.76620	"	1.88686	"	2.11886	"	2.34033	"	2.72633
20	5.55712	"	2.53617	"	2.70944	"	3.04258	"	3.36060	"	3.91488
25	7.47973	"	3.41361	"	3.64683	"	4.09522	"	4.52328	"	5.26931
30	9.62413	"	4.39228	"	4.69236	"	5.26930	"	5.82008	"	6.78000
35	11.97937	"	5.46717	"	5.84068	"	6.55882	"	7.24438	"	8.43922
40	14.53638	"	6.63414	"	7.08739	"	7.95880	"	8.79070	"	10.24058
45	17.28749	"	7.88969	"	8.42872	"	9.46506	"	10.45440	"	12.17867
50	20.22605	"	9.23080	"	9.86145	"	11.07395	"	12.23146	"	14.24883

$\alpha = 0.08$ $d = 0.10$

$\lambda = 0.60$ Water Depth = 1000 ft; $Q_g = .28408\ m^3/sec$; $F_o = 28.682$ $Z_o = 1.7887 m$

h ft	Q_{pth} m^3/sec	$P_m = .90$		$P_m = .92$		$P_m = .95$		$P_m = .97$		$P_m = .99$	
		a^2/e^2	Q_T	a^2/e^2	Q_T	a^2/e^2	Q_T	a^2/e^2	Q_T	a^2/e^2	Q_T
5	1.23877	.60951	.56535	.66858	.60398	.79299	.67824	.92821	.74913	1.21902	.87269
10	2.32771	"	1.06233	"	1.13490	"	1.27444	"	1.40766	"	1.63983
15	3.67440	"	1.67693	"	1.79150	"	2.01177	"	2.22205	"	2.58854
20	5.25595	"	2.39872	"	2.56260	"	2.87768	"	3.17847	"	3.70271
25	7.05598	"	3.22022	"	3.44023	"	3.86321	"	4.26702	"	4.97079
30	9.06190	"	4.13569	"	4.41824	"	4.96148	"	5.48008	"	6.38392
35	11.26362	"	5.14051	"	5.49171	"	6.16694	"	6.81154	"	7.93498
40	13.65276	"	6.23087	"	6.65657	"	7.47502	"	8.25635	"	9.61809
45	16.22224	"	7.40353	"	7.90935	"	8.88185	"	9.81021	"	11.42823
50	18.96593	"	8.65570	"	9.24706	"	10.38402	"	11.46942	"	13.36110

TABLE A.2.1.10 (CONT.-)

$\alpha = .08$ $d = 0.15$

$\lambda = 0.60$ | Water Depth = 200 ft; $Q_g = 1.25874\ m^3/sec$; $F_o = 46.118$ $Z_o = 2.440\ m$

h ft	Q_{pth} m^3/sec	$P_m = .90$		$P_m = .92$		$P_m = .95$		$P_m = .97$		$P_m = .99$	
		a^2/e^2	Q_T	a^2/e^2	Q_T	a^2/e^2	Q_T	a^2/e^2	Q_T	a^2/e^2	Q_T
5	2.74417	.60951	1.25239	.66858	1.33795	.79299	1.50246	.92821	1.65950	1.21902	1.93321
10	4.71924	"	2.15378	"	2.30092	"	2.58383	"	2.85390	"	3.32461
15	7.09984	"	3.24024	"	3.46161	"	3.88723	"	4.29354	"	5.00169
20	9.85373	"	4.49706	"	4.80430	"	5.39501	"	5.95892	"	6.94174
25	12.95701	"	5.91334	"	6.31734	"	7.09408	"	7.83560	"	9.12794
30	16.39097	"	7.48054	"	7.99161	"	8.97421	"	9.91224	"	11.54710
35	20.14035	"	9.19169	"	9.81967	"	11.02703	"	12.17963	"	14.18845
40	24.19237	"	11.04095	"	11.79528	"	13.24555	"	14.63005	"	17.04302
45	28.53611	"	13.02336	"	13.91312	"	15.62378	"	17.25687	"	20.10309
50	33.16207	"	15.13456	"	16.16856	"	18.15654	"	20.05437	"	23.36199

$\alpha = 0.08$ $d = 0.20$

$\lambda = 0.60$ | Water Depth = 200 ft; $Q_g = 1.25874\ m^3/sec$; $F_o = 27.466$ $Z_o = 3.7566\ m$

h ft	Q_{pth} m^3/sec	$P_m = .90$		$P_m = .92$		$P_m = .95$		$P_m = .97$		$P_m = .99$	
		a^2/e^2	Q_T	a^2/e^2	Q_T	a^2/e^2	Q_T	a^2/e^2	Q_T	a^2/e^2	Q_T
5	4.42585	.60951	2.01988	.66858	2.15788	.79299	2.42320	.92821	2.67648	1.21902	3.11792
10	6.75342	"	3.08214	"	3.29271	"	3.69756	"	4.08405	"	4.75764
15	9.45807	"	4.31649	"	4.61139	"	5.17838	"	5.71965	"	6.66301
20	12.51501	"	5.71162	"	6.10184	"	6.85208	"	7.56830	"	8.81656
25	15.90494	"	7.25872	"	7.75464	"	8.70810	"	9.61832	"	11.20470
30	19.61221	"	8.95065	"	9.56216	"	10.73787	"	11.86025	"	13.81639
35	23.62373	"	10.78144	"	11.51803	"	12.93421	"	14.28617	"	16.64243
40	27.92837	"	12.74600	"	13.61681	"	15.29104	"	16.88935	"	19.67495
45	32.51645	"	14.83991	"	15.85378	"	17.80306	"	19.66394	"	22.90716
50	37.37947	"	17.05930	"	18.22480	"	20.46561	"	22.60479	"	26.33305

TABLE A.2.1.10 (CONT..)

$\alpha = 0.08$ $d_o = 0.20$

$\lambda = 1.0$ | Water Depth = 200 ft; $Q_g = 1.25874\ m^3/sec$; $F_o = 22.466$ $Z_o = 3.7566\ m$

h ft	Q_{pth} m^3/sec	$P_m = .90$		$P_m = .92$		$P_m = .95$		$P_m = .97$		$P_m = .99$	
		a^2/e^2	Q_T	a^2/e^2	Q_T	a^2/e^2	Q_T	a^2/e^2	Q_T	a^2/e^2	Q_T
5	5.03306	1.15129	3.44147	1.26286	3.60950	1.49787	3.90763	1.75328	4.16131	2.30259	4.52976
10	7.67996	"	5.25134	"	5.50774	"	5.96267	"	6.34975	"	6.91196
15	10.75567	"	7.35443	"	7.71351	"	8.35063	"	8.89274	"	9.68011
20	14.23202	"	9.73146	"	10.20660	"	11.04964	"	11.76696	"	12.80882
25	18.08704	"	12.36742	"	12.97125	"	14.04265	"	14.95427	"	16.27834
30	22.30292	"	15.25012	"	15.99470	"	17.31584	"	18.43994	"	20.07263
35	26.86481	"	18.36941	"	19.26630	"	20.85766	"	22.21169	"	24.17833
40	31.76003	"	21.71663	"	22.77694	"	24.65827	"	26.25903	"	28.58403
45	36.97758	"	25.28424	"	26.51874	"	28.70914	"	30.57288	"	33.27982
50	42.50778	"	29.06564	"	30.48477	"	33.00275	"	35.14522	"	38.25700

$\alpha = 0.08$ $d_o = 0.15$

$\lambda = 1.0$ | Water Depth = 200 ft; $Q_g = 1.25874\ m^3/sec$; $F_o = 46.118$ $Z_o = 2.440\ m$

h ft	Q_{pth} m^3/sec	$P_m = .90$		$P_m = .92$		$P_m = .95$		$P_m = .97$		$P_m = .99$	
		a^2/e^2	Q_T	a^2/e^2	Q_T	a^2/e^2	Q_T	a^2/e^2	Q_T	a^2/e^2	Q_T
5	3.12066	1.15129	2.13382	1.26286	2.23800	1.49787	2.42286	1.75328	2.58014	2.30259	2.80859
10	5.36670	"	3.66960	"	3.84877	"	4.16667	"	4.43716	"	4.83003
15	8.07391	"	5.52071	"	5.79026	"	6.26853	"	6.67547	"	7.26652
20	11.20562	"	7.66209	"	8.03619	"	8.69996	"	9.26475	"	10.08506
25	14.73466	"	10.07515	"	10.56707	"	11.43989	"	12.18254	"	13.26120
30	18.63975	"	12.74534	"	13.36763	"	14.47177	"	15.41125	"	16.77577
35	22.90352	"	15.66079	"	16.42543	"	17.78214	"	18.93652	"	20.61317
40	27.51146	"	18.81158	"	19.73005	"	21.35971	"	22.74634	"	24.76032
45	32.45115	"	22.18919	"	23.27258	"	25.19485	"	26.83045	"	29.20603
50	37.71178	"	25.78626	"	27.04527	"	29.27917	"	31.17990	"	33.94060

TABLE A.2.1.10 (CONT.-)

$\alpha = 0.10$ $d_0 = 0.20$ m

$\lambda = 1.0$ Water Depth = 200 ft; $Q_g = 1.75874\ m^3/sec$; $F_o = 22.466$ $Z_o = 3.7566$ m

h ft	Q_{pth} m^3/sec	$P_m = .90$		$P_m = .92$		$P_m = .95$		$P_m = .97$		$P_m = .99$	
		a^2/e^2	Q_T	a^2/e^2	Q_T	a^2/e^2	Q_T	a^2/e^2	Q_T	a^2/e^2	Q_T
5	6.77713	1.15129	4.63401	1.26286	4.86027	1.49787	5.26172	1.75328	5.60329	2.30259	6.09941
10	10.34123	"	7.07105	"	7.41629	"	8.02886	"	8.55008	"	9.30711
15	14.48275	"	9.90290	"	10.38641	"	11.24431	"	11.97426	"	13.03447
20	19.16372	"	13.10362	"	13.74340	"	14.87859	"	15.84447	"	17.24735
25	24.35459	"	16.65299	"	17.46607	"	18.90874	"	20.13625	"	21.91913
30	30.03137	"	20.53462	"	21.53722	"	23.31615	"	24.02978	"	27.02823
35	36.17405	"	24.73481	"	25.94249	"	28.08529	"	29.90852	"	32.55655
40	42.76557	"	29.24191	"	30.66964	"	33.20290	"	35.35836	"	38.48901
45	49.79111	"	34.04578	"	35.70806	"	38.65748	"	41.16704	"	44.81200
50	57.23765	"	39.13752	"	41.04840	"	44.43892	"	47.32380	"	51.51389

$\alpha = 0.10$ $d_0 = .20$ m

$\lambda = 0.60$ Water Depth = 200 ft; $Q_g = 1.75874\ m^3/sec$; $F_o = 22.466$ $Z_o = 3.7566$ m

h ft	Q_{pth} m^3/sec	$P_m = .90$		$P_m = .92$		$P_m = .95$		$P_m = .97$		$P_m = .99$	
		a^2/e^2	Q_T	a^2/e^2	Q_T	a^2/e^2	Q_T	a^2/e^2	Q_T	a^2/e^2	Q_T
5	5.95957	.60951	2.71984	.66858	2.90566	.79299	3.26292	.92821	3.60398	1.21902	4.19840
10	9.09373	"	4.15021	"	4.43375	"	4.97890	"	5.49932	"	6.40634
15	12.73563	"	5.81231	"	6.20941	"	6.97288	"	7.70172	"	8.97199
20	16.85193	"	7.69091	"	8.21636	"	9.22659	"	10.19100	"	11.87183
25	21.41660	"	9.77414	"	10.44192	"	11.72579	"	12.95143	"	15.08754
30	26.40856	"	12.05238	"	12.87581	"	14.45893	"	15.97026	"	18.60428
35	31.81023	"	14.51761	"	15.50945	"	17.41640	"	19.23686	"	22.40964
40	37.60659	"	17.16296	"	18.33554	"	20.58995	"	22.74213	"	26.49305
45	43.78461	"	19.98249	"	21.34770	"	23.97248	"	26.47822	"	30.84534
50	50.33284	"	22.97098	"	24.54037	"	27.55770	"	30.43818	"	35.45843

Effect of Varying GOR

The GOR determines the amount of gas released from the blowout. The gas volume of 27×10^6 scf/day is based on a GOR of 900 and an oil volume of 30,000 BPD. The characteristics of a blowing well depend upon the GOR rather than the oil volume (Q_{oil}). However, for the quantitative measure of the gas, the oil volume flow rate (Q_{oil}) is as important as the GOR. In a general case, GOR, oil volume and gas volume all can vary. If there are n_1 values of GOR and n_2 values of oil volume flow rate then there will be $n_1 \times n_2$ values of gas volume flow rates (Q_g) to be analyzed. For this analysis let us assume that Q_{oil} is fixed. Then, corresponding to other GOR's the Q_g will vary as follows.

TABLE A.2.1.11 Q_g m^3/sec

GOR	Std	100' W.D.	500' W.D.	700' W.D.	1000' W.D
100	0.983	0.2450	0.0612	0.0445	0.0316
200	1.966	0.4898	0.1223	0.0890	0.0631
300	2.949	0.7347	0.1835	0.1334	0.0947
400	3.932	0.9796	0.2447	0.1779	0.1263
500	4.915	1.2245	0.3058	0.2224	0.1578
600	5.898	1.4694	0.3670	0.2668	0.1894
700	6.882	1.7143	0.4280	0.3113	0.2210
800	7.865	1.9592	0.4893	0.3558	0.2525
900	8.848	2.2041	0.5505	0.4003	0.2841
1000	9.831	2.4490	0.6116	0.4447	0.3156

It can be noticed that in shallower waters the effect of varying GOR is much more significant than in deeper waters.

The Effects on Flow Rates and Collection Efficiency

The volume of entrained water has been theorized to be proportional to $(Q_g)^{1/3}$, i.e.

$$Q_E \propto Q_g^{1/3} \qquad \text{(Topham)}$$

and $Q_g \propto$ GOR for any given water depth.

Therefore,

$$Q_E \propto (\text{GOR})^{1/3}$$

It can be seen that for 10% to 900% variation in GOR the Q_E can vary from 3.23 % to 115.44 % respectively. If a GOR of 900 is taken as a base, then

GOR	% change	% change in Q_E
100	− 88.89	− 51.92
200	− 77.78	− 39.43
300	− 66.67	− 30.66
400	− 55.56	− 23.69
500	− 44.44	− 17.79
600	− 33.33	− 12.64
700	− 22.22	− 8.04
800	− 11.11	− 3.85
900	Base	Base
1000	+ 11.11	+ 3.85
1100	+ 22.22	+ 8.04

TABLE A.2.1.11

2.2. Data From Milgram's Bugg Spring Model Tests [8]

Dr.J.H. Milgram's Bugg Spring Tests

Table 2.--Test conditions for the double collector.

Test number	Height above wellhead (m)	Air flow rate (nm^3/s)	Dye flow (liters/s)	Inner riser flow (m^3/s)	Outer riser flow (m^3/s)	Pct. of dye collected	F	R	Predicted pct.
1	2.25	0.047	2.59	0.064	0.000	74	0.003	7.728	42.
2	0.04	0.047	2.36	0.084	0.000	118	71461.875	9.737	100.
3	0.04	0.047	2.06	0.065	0.000	88	55044.949	7.500	100.
4	2.25	0.165	1.03	0.149	0.110	60	0.011	8.933	67.
5	2.25	0.165	2.25	0.139	0.097	64	0.010	8.159	64.
6	0.04	0.165	2.50	0.138	0.000	93	117332.625	4.579	100.
7	1.19	0.165	2.46	0.130	0.030	90	0.034	5.270	84.
8	1.19	0.165	2.54	0.038	0.026	89	0.031	4.770	81.
9	1.19	0.165	2.59	0.092	0.016	87	0.023	3.510	71.
10	2.25	0.165	2.10	0.174	0.029	74	0.013	3.153	59.
11	2.25	0.557	2.13	0.030	0.016	44	0.004	0.874	26.
12	2.25	0.614	2.08	0.027	0.016	36	0.003	0.651	22.
13	2.25	0.614	2.07	0.146	0.017	54	0.012	2.569	54.

Dr.J.H. Milgram's Bugg Spring Tests

Table 3.--Test conditions for the single collector.

Test number	Height above wellhead (m)	Air flow rate (nm^3/s)	Dye flow (liters/s)	Riser flow (m^3/s)	Pct. of dye collected	F	R	Predicted pct.
1	1.19	0.047	1.08 ·00108	0.102 ·00094	87	0.023	12.120	83.
2	1.19	0.047	2.10 ·00210	0.104 ·00176	84	0.023	12.322	84.
3	0.04	0.047	2.13 ·00213	0.102 ·00213	100	87154.500	11.875	100.
4	1.72	0.047	1.37 ·00137	0.104 ·00110	80	0.016	22.466	80.
5	0.04	0.165	2.28 ·00228	0.136 ·00201	88	115884.125	4.523	100.
6	1.19	0.165	2.26 ·00226	0.138 ·00181	80	0.031	4.684	80.
7	1.19	0.165	2.25 ·00225	0.079 ·00142	63	0.017	2.674	62.
8	1.19	0.165	2.25 ·00225	0.040 ·00126	56	0.009	1.366	42.
9	0.64	0.165	2.25 ·00225	0.136 ·00216	96	0.172	4.550	100.
10	0.64	0.165	2.25 ·00225	0.039 ·00128	57	0.044	1.314	70.
11	0.64	0.165	2.25 ·00225	0.077 ·00205	91	0.086	2.571	92.
12	0.04	0.550	1.99 ·00199	0.147 ·00187	94	125541.125	1.472	100.
13	1.19	0.590	2.13 ·00213	0.115 ·00138	65	0.025	1.093	55.
14	1.19	0.590	2.11 ·00211	0.051 ·00068	32	0.011	0.482	32.
15	1.72	0.590	0.88 ·00088	0.155 ·00035	40	0.013	1.483	48.
16	1.72	0.590	0.95 ·00095	0.052 ·00013	14	0.004	0.500	23.

Table 4.--Test conditions for the riser alone without a collection cone on its bottom.

Test number	Height above wellhead (m)	Air flow rate (nm^3/s)	Dye flow (liters/s)	Riser flow (m^3/s)	Pct. of dye collected	F	R	Predicted pct.
1	1.19	0.047	1.11	0.101	99	0.022	11.919	83.
2	1.19	0.047	2.32	0.104	100	0.023	12.355	84.
3	0.04	0.047	2.27	0.104	111)	88603.062)	12.072	100.
4	1.72	0.045	2.27	0.094	97	0.008	11.284	62.
5	0.04	0.165	2.28	0.134	88	114194.125	4.457	100.
6	1.19	0.165	2.28	0.141	75	0.031	4.770	81.
7	1.19	0.165	2.27	0.064	50	0.014	2.183	56.
8	0.64	0.165	2.27	0.138	80	0.155	4.629	99.
9	0.64	0.165	2.26	0.064	59	0.073	2.162	87.
10	0.04	0.578	2.08	0.043	72	36213.785)	0.404	100.
11	1.19	0.590	2.16	0.131	53	0.029	1.241	60.
12	1.19	0.590	2.17	0.048	31	0.011	0.452	31.
13	1.72	0.590	2.11	0.139	34	0.012	1.328	45.
14	1.72	0.590	2.17	0.043	20	0.004	0.416	20.

COMMENTS ON BUGG SPRING TEST DATA (TABLES 2, 3 and 4 ATTACHED)

1. These data do not give the amount or fraction of air flow actually going through the riser.
2. For identical values of h, Q_o and dye flow all other values are not identical. The reason is not obvious. The small variations in rate of dye flow (as in Test Nos. 1 & 2, and 15 & 16) should not have made much difference in Q_T, F, R and P. But it did.
3. When h, Q_o and dye flow are almost fixed (such as Test Nos. [6,7,8], [9,10,11], and [13,14], the variations in calculated and predicted P and Q_T are too much. Obviously it is because the Riser Flow (Q_T) was different which may have been regulated.
4. The values of F corresponding to $h = 0.04$ m are incorrect.
5. Measured collection efficiencies greater than 100% could be due to measurement errors.

2.3 History of Plume Theory and Analytical and Experimental Results of Fanneløp and Sjøen [33]

INTRODUCTION

The exploration and exploitation of our offshore oil and gas resources introduce many safety and environmental problems about which very little is known. A runaway well from a high pressure reservoir, i.e. blowout, represents a threat much feared by oil men and environmentalists alike. In spite of the many safeguards introduced to prevent such accidents, they cannot be ruled out. We are here interested in analyzing the hydrodynamics of blowouts emanating at the sea bed. Underwater blowouts are more likely to occur during exploration drilling when the blowout preventer is mounted at the wellmouth rather than on top of the riser as is usual in the production phase. The hydrocarbon fluids can be expected to impact the water at substantial velocity unless blocked by debris or the unserviceable preventer stack. A rudimentary analysis shows that the initial momentum is relatively unimportant for depths in excess of 100 m[1]. The upward motion of the hydrocarbon fluids is dominated by buoyancy, and it is not of crucial importance to know the initial conditions with precision.

For wells with medium-to-high gas content, the oil contributes little to the overall buoyancy and only the gas merits consideration. (For many North Sea wells, the gas-to-oil volume ratio approaches 200:1, referred to standard conditions). Due to the initial impact with the water and the high turbulence level in the rising plume, the oil will break up into small droplets of negligible terminal rise velocity. The rate of transport of the oil to the surface is determined then by the plume velocity which in turn depends on the amount of free gas. The gas volume will increase as the plume rises due to gas expansion with reduced hydrostatic pressure and due to boiling of lighter fractions such as propane. Allowance must be made for variable buoyancy in the hydrodynamic analysis, except in shallow waters. The actual thermodynamic expansion process is belived to be intermediate between adiabatic and isothermal, and for the high expansion ratios of interest the nature of this process is of considerable importance.

Figure 1 illustrates the more important hydrodynamic features of an underwater blowout. The jet region close to the sea bed is of limited extent and relatively unimportant for deepwater wells. The developed plume which extends nearly from the sea bed to the surface, is comparable to a thermal plume but will in general not obey the similarity rules for unstratified surroundings.[2] The surface interaction zone is quite shallow, but of great importance when considering the fate of the oil on the surface. The vertical motion is deflected outward by the constant pressure boundary with little loss in momentum. A jetlike radial layer is generated close to the surface and which extends a considerable distance from the blowout point. The oil will be carried outward by this swift moving layer at a rate much faster than when left to its own spreading forces[3].

It is usual and useful in analyzing bubble plumes to refer to the analogous problem of thermal plumes as first suggested by Taylor[4]. The thermal plume solution is in turn based on the Boussinesq approximation. It is worth notice that this approximation is not likely to be very accurate near the source of bubble plumes. This is true both near the jet region of a full scale blowout and near the bubble generator representing the simulated blowout source in a laboratory experiment. The thermal plume analogy requires a large number of bubbles of dimensions small in comparison with the plume radius, to be distributed in such a fashion that a near continuous buoyancy profile results across the plume. When the bubbles are few in number and large in size, the plume develops a twolayer structure with an inner bubble plume and an outer concentric plume consisting mainly of water. Such bubblestarved plumes (in the limit, a single chain of rising bubbles) have been studied by Hussain and Siegel[5]. For waters of sufficient depth an underwater blowout will always develop into a bubblestarved plume since the amount of gas is limited and the average bubble diameter is of the order of the maximum stable size independent of depth. Drilling at depths of one kilometer and more is now being considered, and at such extreme depths it may be necessary to investigate the transition to a doubleplume structure. The problem of stratification is belived to be of lesser importance for blowouts, but McDougall's investigation[6] shows that this introduces new and unexpected phenomena.

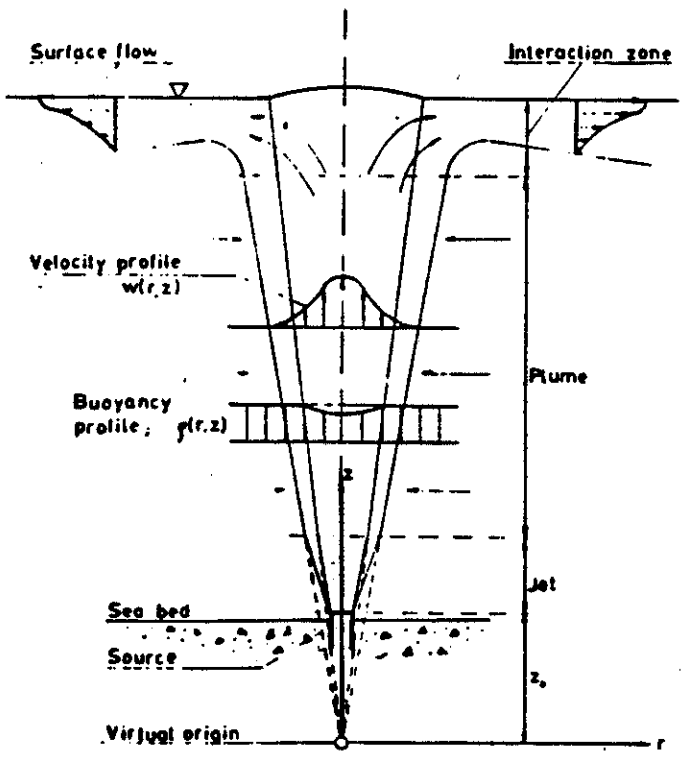

Fig. 1 - Definition sketch of a blowout

Part I - THEORY

The various theoretical models proposed for thermal plumes, are discussed in the recent book by Turner[2]. The theoretical formulation for bubble plumes is less satisfactory and a number of conflicting ideas and models have been proposed in recent years. In an investigation quite similar to the present, Kobus[8] compared his experimental results with a new theory based on the assumption that the absolute rate of rise of the bubble stream is independent of depth analogous to a single bubble in a quiescent environment. It is possible to correlate data from a very limited range of depth on this basis. Kobus' data show a dependence on air flow rate of plume width, an indication that the plume was "bubble starved" at the low end of the experimental range. In a later investigation, Ditmars and Cederwall[9] have, more correctly modified the thermal plume theory as applied to bubble plumes by including a slip velocity between the bubbles and water in the plume. They have also allowed for gas expansion and the difference in width between the density and velocity profiles, this ratio being expressed by the parameter λ. Ditmars and Cederwall proposed the value $\lambda = 0.2$ based on Kobus' data. This value is probably much too low for typical (not bubble starved) bubble plumes.

In Mundheim and Fanneløp's[1] investigation of a hypothetical blowout at 150 m depth, thermal plume theory was used with an ad hoc correction for gas expansion. The jet region was included in the analysis and the matching of the jet and the buoyant plume based on continuity in buoyancy and momentum flux was considered. The matching region was found to be located quite near the jet source in spite of the high efflux velocity, and it was concluded that the details of the jet region are of little consequence for blowouts at depths in excess of 100 m.

The field tests of Topham and the reported discrepancies between observations and thermal plume theory, provoked the present reassessment of our early blowout analysis and also inspired McDougall's investigation. Topham's data are not of good quality as the measurements proved to be very difficult, but he observed some new and interesting phenomena. We will refer to his data and observations later in the present paper. McDougall improved the Ditmars-Cederwall theory to include the effects of a stratified environment. He also conducted small scale experiments to verify the prediction that the outer layer of the plume can leave the main plume and spread out horizontally at its own density level. A double plume structure was again observed, but it is not clear whether this was a result of stratification or insufficient number density of bubbles. The interesting phenomenon predicted by McDougall is not likely to be important in offshore work as the ocean stratification is too weak. Measureable density differences are found either near the seabed (the jet region) or near the surface (the interaction zone) where in any case the plume theory is invalid. There is therefore little danger for subsurface contamination due to oil drops being shed from the plume at intermediate levels as suggested by McDougall. The present investigation indicate that small, neutrally buoyant particles, placed in the water at some distance from the plume, will eventually be entrained and carried to the surface as

A difficulty related to the two-phase character of the bubble plume is the definition of bulk density and velocity. It is usual to postulate an average rate of slip between the bubbles and the liquid equal to the terminal velocity w_s of a single bubble in a quiescent liquid. As this velocity is nearly constant over a wide range in size, the concept is a useful one. It should be noted, however, that the bubbles near the plume center can be densely packed and the empirical value characterizing single bubbles is probably inappropriate. The definition of bulk density is important in establishing the buoyancy force which drives the motion. Ditmars and Cederwall argue that the buoyancy flux at any level is proportional to the product of the absolute velocity of the bubbles and the density difference between the ambient fluid and the plume. McDougall uses the same intuitive formulation but it appears to lead to an incorrect value of the buoyancy force. The buoyancy is due to the difference in density between the two phases and there is no reason to favor the velocity of one phase over the other in establishing the buoyancy flux. It is better to determine the appropriate plume density from the total mass flow in the plume. In what follows we will use either gaussian or tophat profiles for velocity and buoyancy (with radius b and λb respectively) and only the integral forms of the equations of motion are considered (Turner[2], Ch. 6). The result derived for bubble plumes differ considerably from thermal plume results because the variable buoyancy parameter $\phi(z)$ has a powerful effect on the solution for substantial variations in depth.

In addition to the approximations used to obtain these equations, we note that the individual bubbles will grow during their ascent to a critical size, break up and grow again etc. They also require a finite time to accelerate to their terminal velocity which in turn depends on size etc. The "terminal" velocity therefore is a rather nebulous concept. Experiments by Jones[11] indicate that the opposite processes of break-up and coalescence on the average produce a bubble size of about 10 mm for air in water. In a blowout the bubbles contain mainly methane and the interface is contaminated with hydrocarbon liquids which reduce considerably the surface tension. In the range of bubble radii 0.2 cm - 1.5 cm, Levich[12] indicates a nearly constant terminal velocity of 30 cm/s. Topham[7] reports, however, that bubbles as large as 5 cm were observed using underwater TV-equipment. If a major portion of the gas in contained in such large bubbles, and these furthermore are densely packed near the center of the plume, the "pumping efficiency" of the buoyancy force will be considerably less than predicted from plume theory. The difference between our predicted and measured values are belived to be influenced by this effect.

1.2. Approximate Solutions Based on Local Similarity

Topham has indicated several ways in which deep-set bubble plumes may differ from thermal plumes. At distances from the source exceeding roughly 20 m, the plume radius was observed to become nearly constant but some further growth occurred as it approached the surface. The centerline velocity decreased with height as the plume radius increased but changed little over the remainder of the plume height. The velocity profiles were initially of gaussian type but acquired more of the "tophat" character with increasing distance from the source. From the limited data Topham deduced a marked reduction in the entrainment coefficient in the upper part of the plume. Topham concluded that the problem is inherently nonsimilar and beyond the state-of-the-art of turbulent plume predictions.

A critical examination of Topham's results indicates, however, that the data are not necessarily in conflict with plume similarity rules. As a result of the difficult field conditions, the data, while very interesting, are of low accuracy. This is most readily apparent when comparing the test series at 60 m and 53 m depth for equal or near equal volume flow rates of air. With the large spread in the measurements it is not possible to ascertain whether the plume has the shape of a cone or cone-cylinder. The transition from gaussian to tophat profiles near the surface can possibly be explained by the lateral swaying of the plume. The motion can be caused both by variations in the local current and by the selfinduced unsteady flowfield due to the passage of large asymmetric eddies. With the long sampling time used to measure velocity, the lateral motion of the instantaneous plume center leads to a flattening of the velocity profile.

The anomalous variations in velocity with depth, are simply the results of variable buoyancy due to gas expansion.

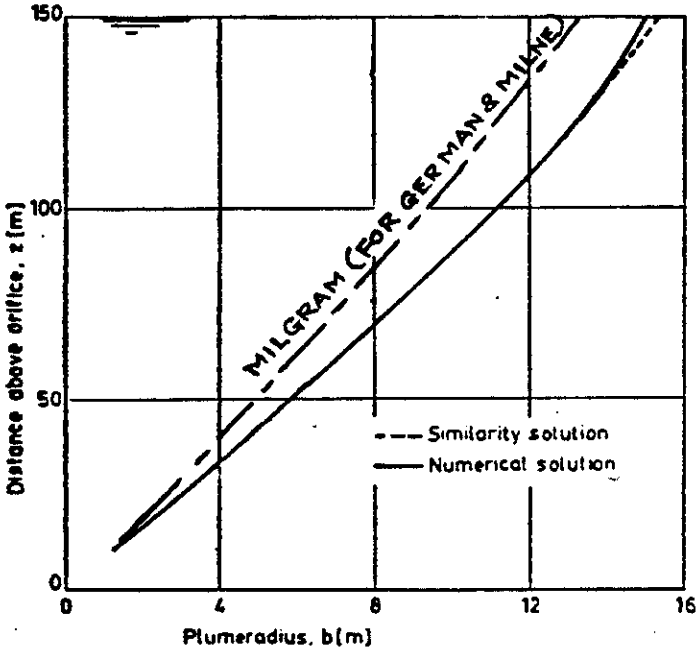

Figure 3 - Plumeradius, both gasflow rates.

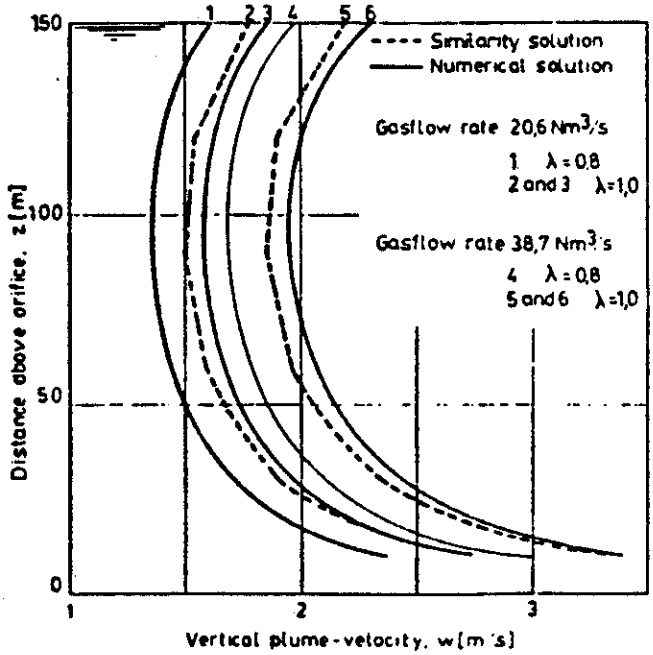

Figure 4 - Plume-velocity

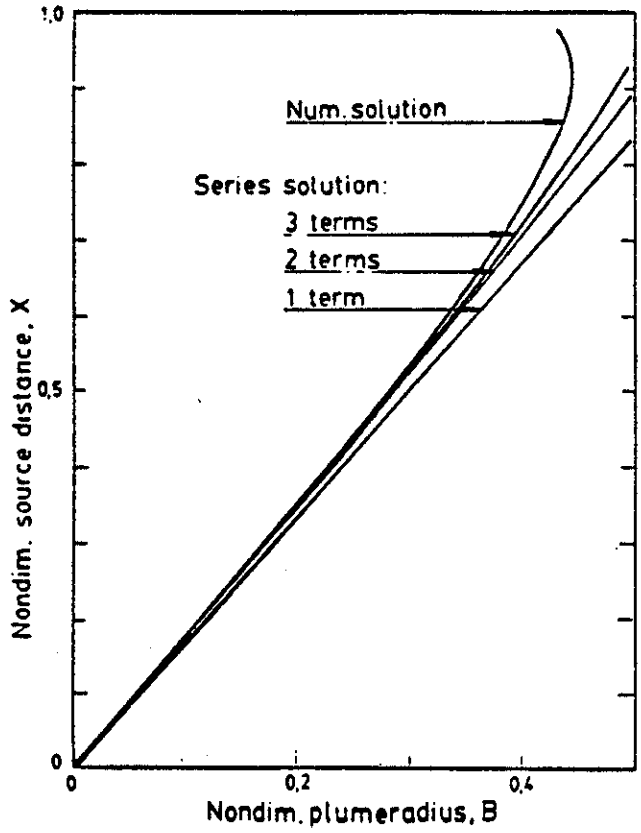

Fig. 5a - Plumeradius, series vs. numerical solution

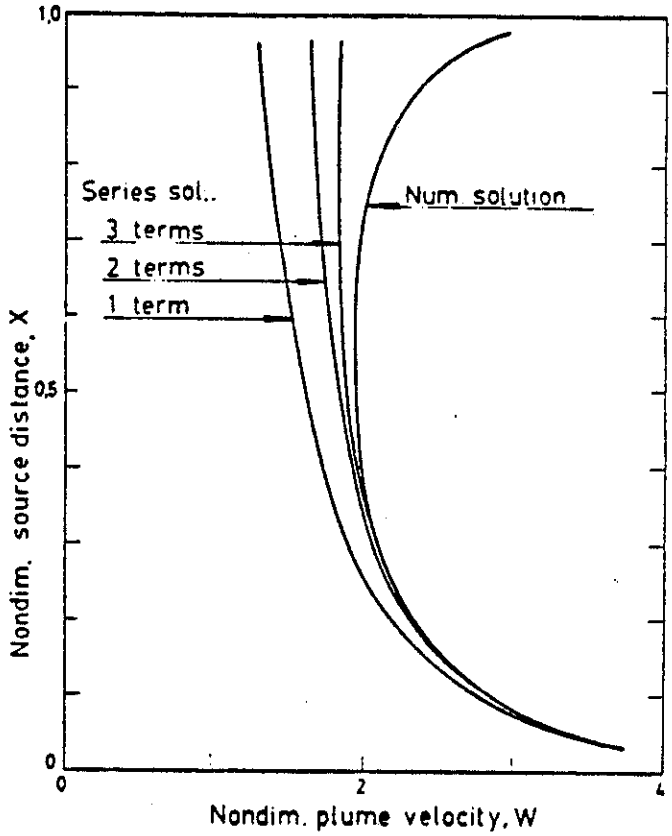

Fig. 5b - Plume velocity, series vs. numerical solution

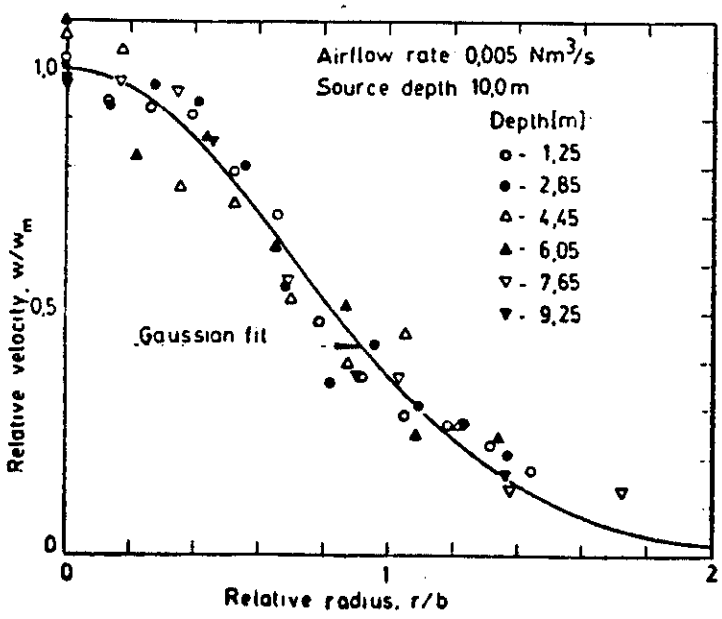

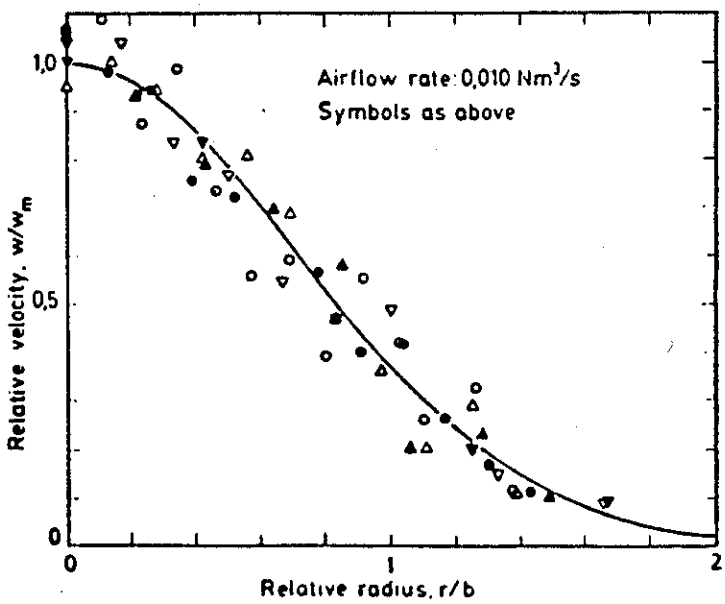

Fig. 11a,b - Vertical plume-velocities.

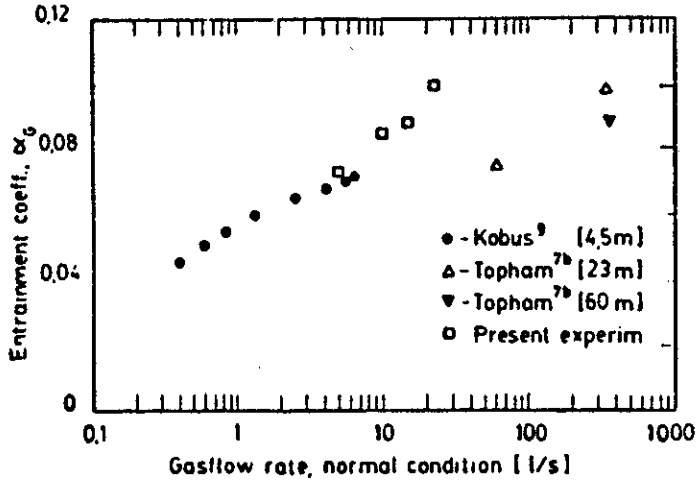

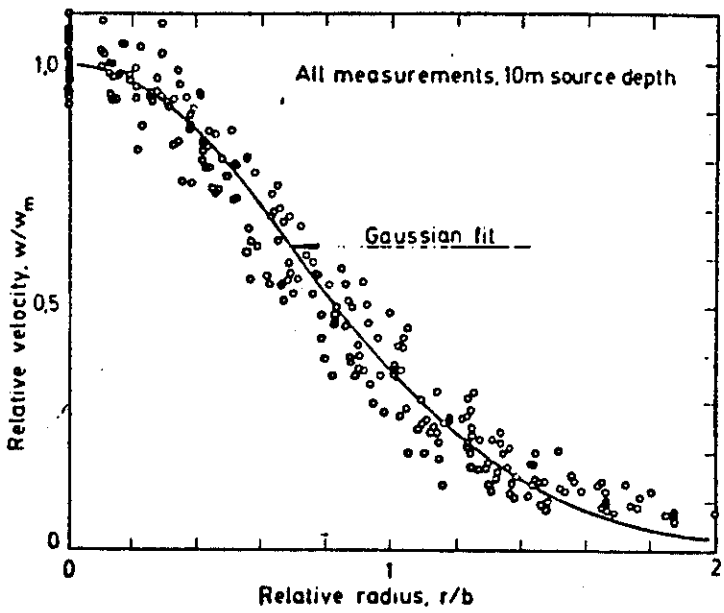

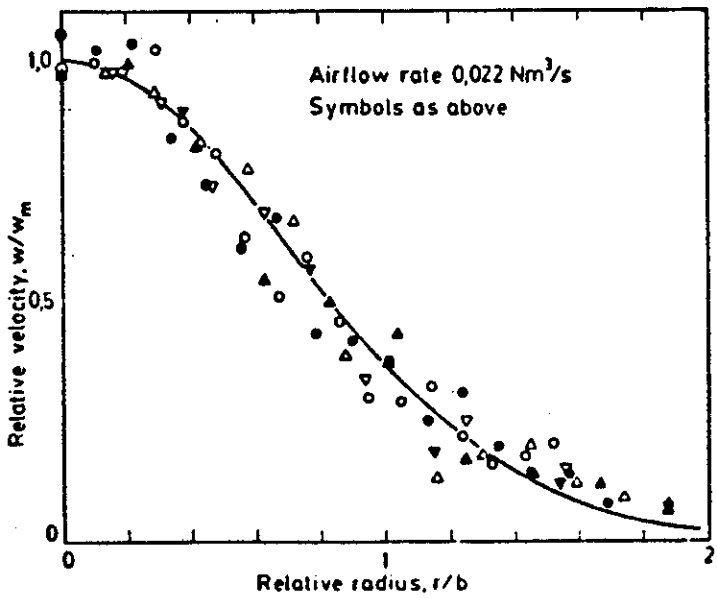

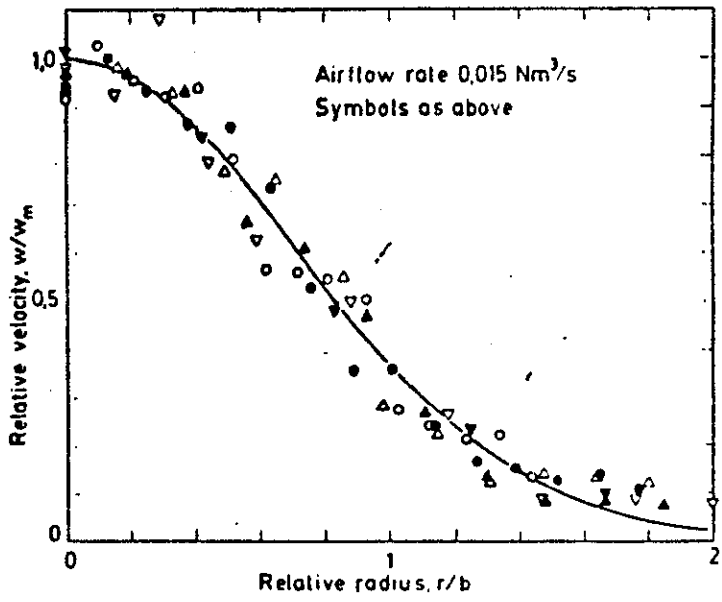

Fig. 12 - Aggregate of data from figures 11a-d.

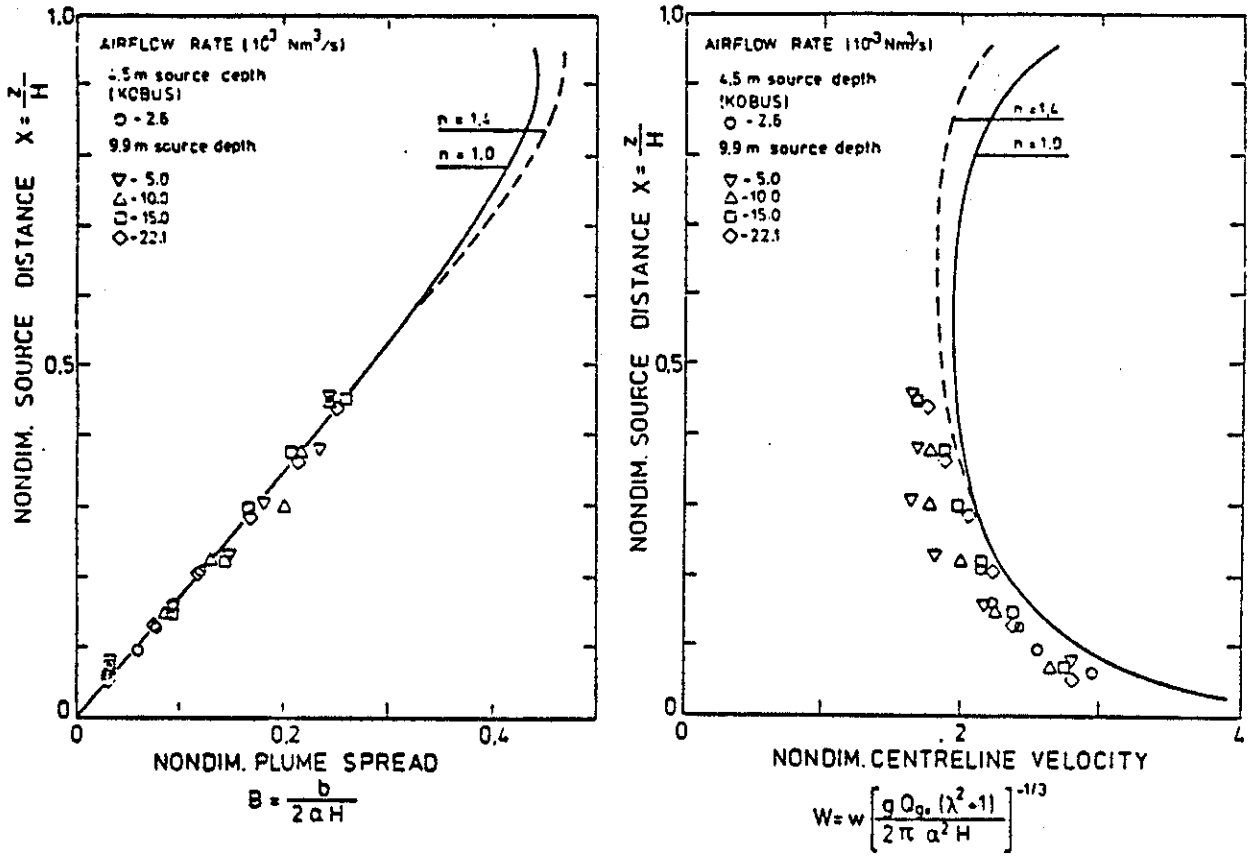

Fig. 14a,b - Comparison between theoretical and experimental plume radius and velocity.

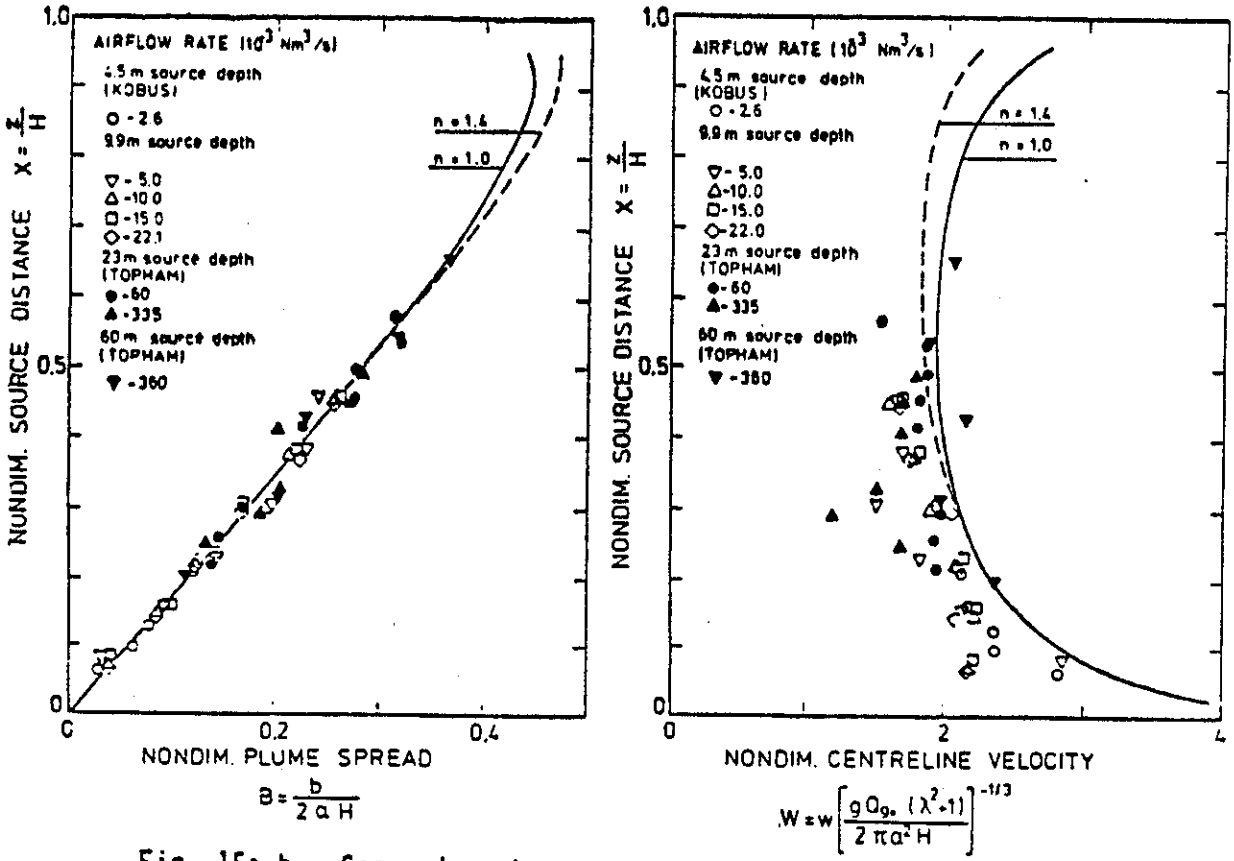

Fig. 15a,b - Comparison between theoretical and experimental plume radius and velocity.

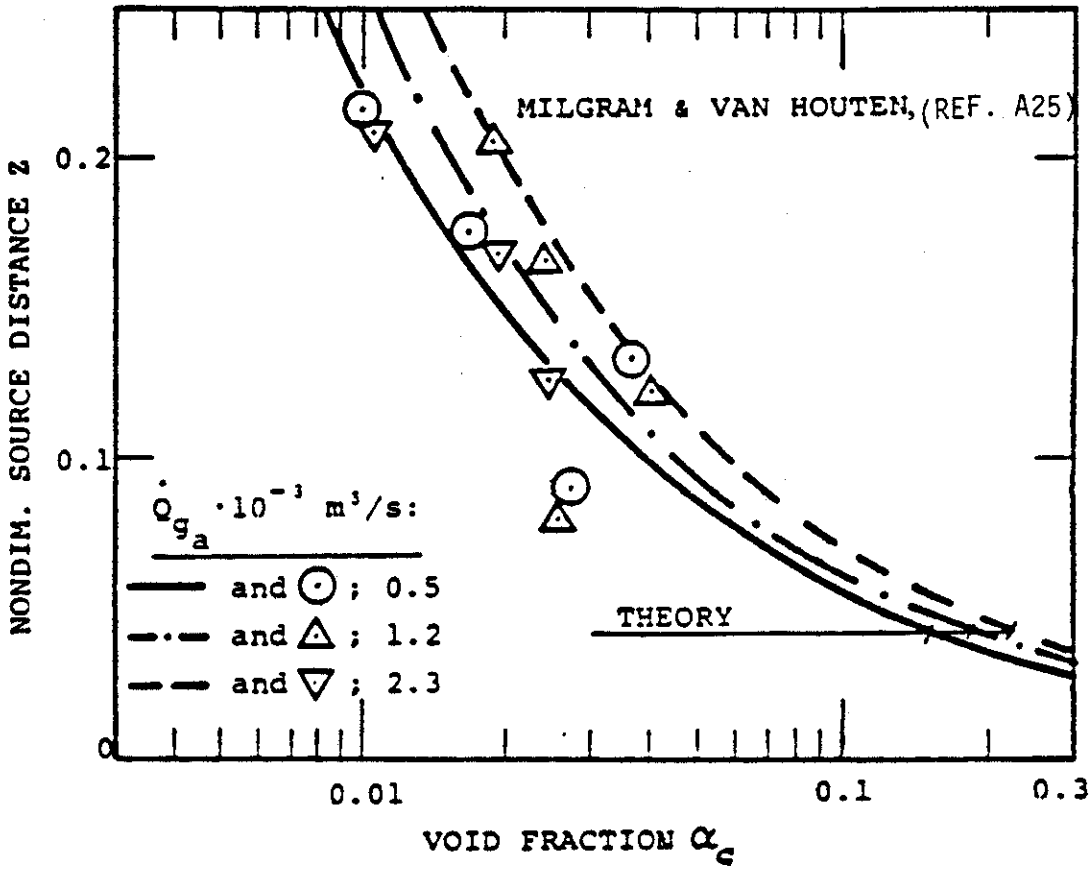

FIGURE NO 16A

COMPARISON OF MEASURED AND CALCULATED VOID FRACTIONS, (REF.A1).
The measurements are read from Ref.A25.

FROM SJØEN, REF.34

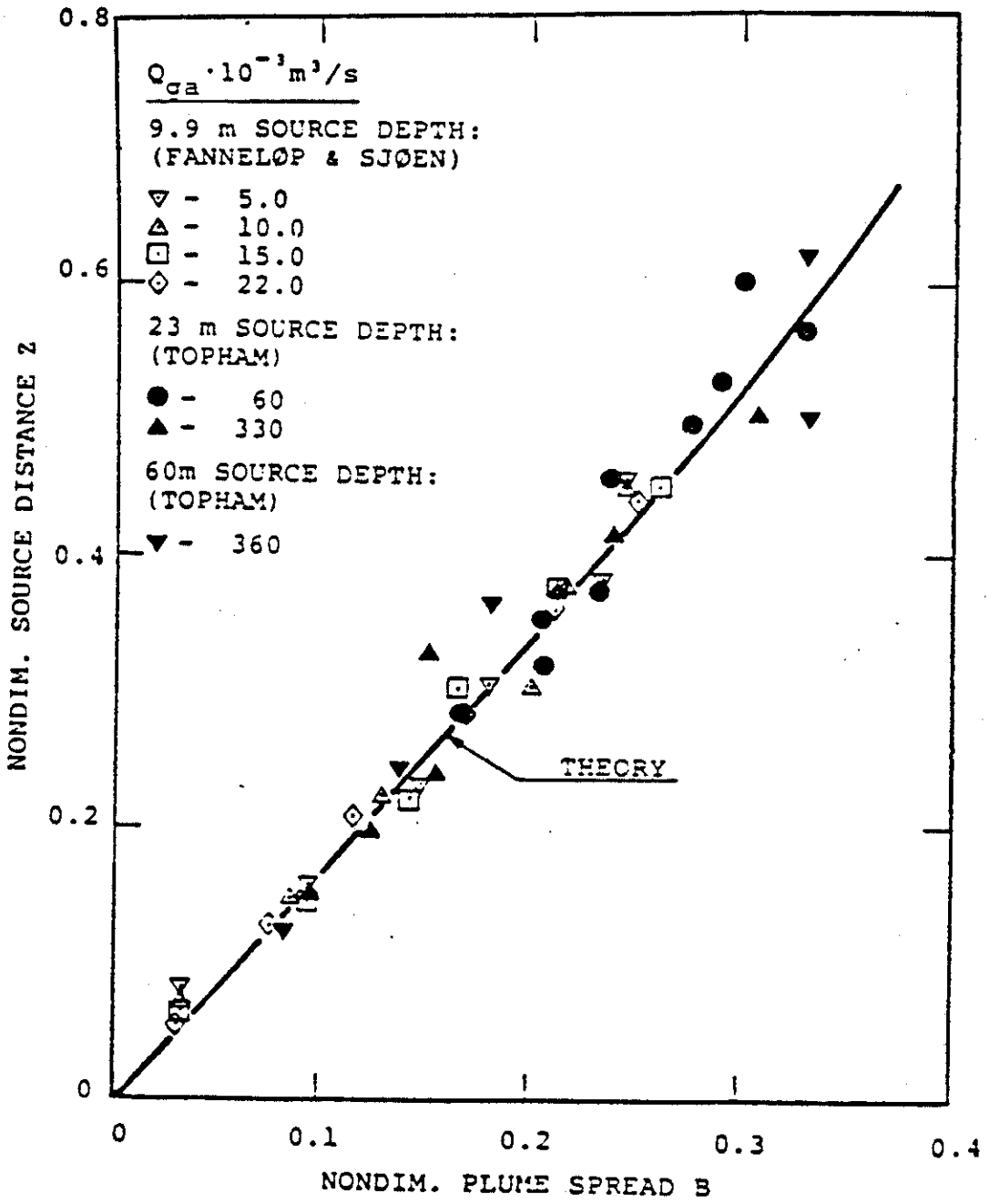

FIGURE NO. 16B

COMPARISONS OF MEASURED AND CALCULATED PLUME SPREAD, REF.A1.

FROM SJØEN, REF. 34

2.4. History of Plume Theory and Analytical and Experimental Results of J.H. Milgram [7]

J. Fluid Mech. (1983), *vol.* (000), *pp* (000–000)
Printed in Great Britain

Mean flow in round bubble plumes

By J. H. MILGRAM
Department of Ocean Engineering, MIT, Cambridge, MA 02139

(Received 28 January 1983)

Previous experimental studies are reviewed and those whose data are deemed reliable are identified. New experiments at larger scale are described and the results are reported. These are combined with the reliable previous studies to form a data set covering heights from 3.66 to 50 m and gasflow rates from 0.0002 to 0.59 normal m^3/s. These wide-ranging data are combined with an integral theory for bubble plumes to determine functional relationships between local plume properties and the entrainment coefficient and the fraction of the momentum flux that is carried in the turbulent velocity fluctuations. These relationships together with the integral theory provide a set of equations that are suitable for numerical solution for the mean flow properties of any round bubble plume. Examples of the numerical solutions are presented and a comparison of one of these with existing experimental data is given. The relationships between the local plume properties and the entrainment coefficient and the momentum flux carried by the turbulence are interpreted to provide a qualitative understanding of the parameters involved and their influences on the plume.

1. Introduction

When a continuous stream of gas is released in the interior of a liquid the gas takes the form of bubbles which rise due to buoyancy and which impart a generally upward velocity to the surrounding liquid. Such bubble plumes occur above blowouts of subsea gas-containing hydrocarbon wells, and it is the desire to understand the hydrodynamics of subsea blowouts that has stimulated the most recent studies of these plumes.

Gas enters the liquid in the form of a jet, and the region through which the flow goes from jetlike to plumelike is called the zone of flow establishment. The region of the flow beneath the upper surface of the liquid extending to a depth about equal to the plume diameter is the part of the flow for which the influence of the upper surface is significant and it is called the zone of surface flow. Usually most of the vertical extent of the flow lies in the 'pure-plume' region between these two zones. It is called the zone of established flow and is the subject of this paper.

Extensive studies of single-phase plumes have taken place, and a thorough review of these is that of Chen & Rodi (1980). The fewer studies of bubble plumes that have been done show that these plumes have both notable similarities and differences with single-phase plumes. This paper extends the integral theory of plumes to include some of these differences and determines approximations for some of the needed functional relationships by analysing existing small-scale data together with new experimental data for plumes of larger scale. A review of important studies of round bubble plumes in non-stratified surroundings known to the author follows. All of the experimental studies have been for air released into water.

Kobus (1968) performed experiments on round bubble plumes in a laboratory basin having a width of 8 m and a depth of 4.7 m, with airflow rates up to 0.0058 normal m^3/s. For each airflow rate, profiles of velocity *vs.* radius were measured, and each of these was fitted with a Gaussian curve whose width and centreline velocity were chosen so as to minimize the error between the curve and the measured data. Kobus found it necessary to average his data over five-minute intervals (presumably to obtain reliable results) because the flow was 'subject to considerable fluctuations'. These fluctuations could have been caused not only by local turbulence, but also by lateral wandering motions of the plume. If wandering did occur, the long-term time-average measurements would show greater widths and smaller centreline velocities than actually existed with respect to the instantaneous locations of the wandering plume centreline; a fact which must be considered in interpreting the data.

Because the air-nozzle diameter was very small (0.2 cm in most cases), the flow in the nozzle was subsonic only for airflow rates below 0.0009 normal m^3/s. For the higher airflow rates, the supercritical flow out of the nozzle could have expanded rapidly to an unknown radius and interacted with the tank bottom so as to add an unknown amount of momentum flux to the plume. Because of this, the sonic orifice data will not be considered further here.

Subsonic-orifice Gaussian-fit centreline velocity results were given by Kobus for airflow rates of 0.00040 and 0.00057 normal m^3/s. Gaussian-fit widths were given for the 0.00040 normal m^3/s case, but not at the same set of heights as the velocity data so that interpolation between points is necessary to obtain the centreline velocity–widths pairs that are needed for the analysis here. Width data were not given for the 0.00057 normal m^3/s case, so it can only be approximated by interpolating between the 0.00040 normal m^3/s case and the next-lowest airflow for which width data are given, which is 0.0013 normal m^3/s. Owing to the uncertainty associated with these steps the Kobus data will not be included here in the primary data set used for determining plume properties. However, these data will be analysed so that they can be compared with other data.

Topham (1975) performed experiments with air bubble plumes in Saanich Inlet off Vancouver Island using air-nozzle depths up to 60 m and airflow rates up to 0.66 normal m^3/s. Profiles of flow speed *vs.* radius were measured at several heights from a horizontally suspended 12 m long beam which supported 20 vertical current meters. A 6 min average of the data from each current meter was used as the velocity at a radius equal to the distance from the beam centre to the meter. The results for plume radii and centreline velocities *vs.* height show too many deviations from smooth functions and vary in excessively irregular ways from test to test to be suitable for use here in the primary data set. Topham (private communication) has indicated that these matters are related, at least in part, to lateral motions of the beam caused by turbulence in the flow and the fact that the lateral restraint was not stiff. Nevertheless, Topham's measurements are in qualitative agreement with those of similar scale made by the author and which are described subsequently.

Fannelop & Sjoen (1980) conducted experiments in a laboratory basin having a width of 10.5 m and a depth of 10 m using airflow rates up to 0.022 normal m^3/s. Fluid velocity at various points was measured, and in order to obtain 'satisfactory repeatability' they had to average their velocity data over 10 min time intervals. Both the actual data and Gaussian curve fits to the profiles of velocity *vs.* radius are presented. The normalized standard deviation for the curve fitting is observed to be about 5 %. Details of two different methods for obtaining Gaussian curve approximations and their results for these data are described by Sjoen (1982). The standard

deviation between results of the two methods is of the order of 4 %. For the subsequent analysis and comparisons considered here, the averages of the two sets of results given by Sjoen will be used.

Milgram & Van Houten (1982) performed experiments on bubble plumes in a 1.65 m diameter laboratory tank with a nozzle depth of 3.66 m at airflow rates up to 0.0022 normal m^3/s. In addition to measuring profiles of flow speed *vs.* radius at several heights, they also measured profiles of momentum flux and of gas fraction. Observations and measurements of the plumes in the tank showed that plume wandering was sufficient to bias measurements taken as long-term time averages. This difficulty was overcome by the following procedure. When a measurement was to be made at a particular height and radius, three identical measurement transducers were located on a horizontal circle of this radius and concentric with the axis of the tank. The output from each transducer was low-pass filtered with a 5 sec time constant. The resultant signals were processed by an analog-to-digital converter and a digital computer whose program discarded all data except those for which all three signals were equal to within a small fraction of the average signal level. This procedure limited retained data to that for which the plume centreline was nearly centred in the tank, so the radius from the instantaneous centreline to the instrument was known. These centering events occurred about once every five minutes on the average. For each transducer location circle, the experiment was continued until eight centring events occurred and the eight measurements were averaged together to obtain the required data point. Profiles of flow speed, momentum flux and gas fraction were fitted with Gaussian curves, with the standard deviation of the fits averaging about 3 % of the centreline values.

All current mean-flow theories for bubble plumes are integral theories for which the general forms for radial distributions of velocity and density defect (and the momentum flux by implication) are presumed to be known in advance. The presumed general forms are chosen to agree with experimental findings. Gaussian forms are most commonly used, with the mean velocity and mean density defect given by

$$u(r, z) = U(z)\, e^{-r^2/b^2}, \tag{1.1}$$

$$\rho_w - \rho_p(r, z) = S(z)\, e^{-r^2/\lambda^2 b^2}, \tag{1.2}$$

where u is the vertical velocity of the liquid, z is the height measured upward from the gas outlet, r is the radius, U is the centreline velocity, b is the 'plume radius', ρ_w is the mass density of water, ρ_p is the mean mass density of the plume, S is the density defect at the plume centreline, and λ is the ratio of 'gas-containing radius' to 'plume radius'.

Ditmars & Cederwall (1974) developed an integral theory for bubble plumes along the same lines as the integral theory for single-phase plumes presented by Morton, Taylor & Turner (1956). Both theories are based on an entrainment hypothesis under which the volume of surrounding liquid that is entrained into the plume per unit height is proportional to both the local centreline velocity and the plume circumference $2\pi b$, with a constant of proportionality being the entrainment coefficient α. Both theories approximate the plume density as that of the surrounding fluid when calculating the momentum flux and the water mass flux, so they contain errors that increase with increasing gas fraction. Also, both theories presume the momentum flux is that of the mean flow, so the momentum flux carried by the turbulence is neglected. Differences in the theories are that Ditmars & Cederwall allowed the gas to move more quickly than the liquid by means of a pre-specified 'slip velocity' and they included

the parameter λ, whereas it is absent in the single-phase plume theory of Morton *et al.*

Ditmars & Cederwall made some conclusions about the values of α and λ by comparing their theory to the data of Kobus (1968). However, these must be discounted, particularly those about λ, owing to the aforementioned artifacts involved with the Kobus data.

Fannelop & Sjoen (1980) determined both approximate similarity solutions and numerically integrated solutions to a set of equations that neglected the slip velocity of the gas, but otherwise were substantially the same as those used by Ditmars & Cederwall. Fannelop & Sjoen applied their theory to the conditions of their experiments to obtain a comparison between theory and experiment, and to make estimates of the entrainment coefficient α. This was done by choosing a value of α that was a constant, independent of depth, for each airflow rate such that the error between theory and experiment for plume radius b *vs.* height was minimized. They used a value of 0.6 for the gas/velocity radius ratio λ, where this was based on qualitative photographic observations of the radius of the gas-containing region. The values of α obtained in this way increased with increased gasflow rate; being 0.075 for a gasflow rate of 0.0050 normal m^3/s and increasing to 0.102 for a gasflow rate of 0.022 normal m^3/s. The comparison between theory and experiment for centreline velocity showed that the theoretical values averaged 15 % greater than the experimental measurements.

Milgram & Van Houten (1982) developed a theory that included the effect of gas fraction on mass and momentum fluxes, and approximated the turbulent transport of mean momentum flux by assuming that a fixed fraction of this flux was carried by the turbulence. George, Alpert & Tamanini (1977) found that 8 % of the mean momentum flux was carried by the turbulence in their single-phase thermal plumes in air. A comparison of velocity measurements and momentum flux measurements in the bubble plumes of Milgram & Van Houten showed that an average of 50 % of the mean momentum flux was carried by the turbulence, and this value was used in applications of their theory. Bubble 'slip velocity' was included in the theory and, for the same reasons as are subsequently described here, a value of 0.35 m/s was used for applications. A comparison of measured radial profiles of velocity and gas fraction gave an average value of λ of 0.8, and this value was used in application of the theory. A fixed entrainment coefficient α was chosen for each gasflow rate in the same way as done by Fannelop & Sjoen. Milgram & Van Houten also found that α increased with increased gasflow rate; being 0.047 for a gasflow rate of 0.000205 normal m^3/s and increasing to 0.083 for a gas-flow rate of 0.00234 normal m^3/s. However, a curve of their values of α *vs.* gasflow rate does not continue smoothly onto a curve for the Fannelop & Sjoen data, which supports the result of dimensional reasoning that other factors in addition to the gasflow must be involved in determining the entrainment coefficient. The comparison between theory and experiment for the centreline velocity U *vs.* height for the Milgram & Van Houten study gives agreement without a systematic bias and a normalized standard deviation of about 7 %. This completes the review of previous work.

In order to be able to use an integral plume theory to predict the mean velocity and density distributions in a bubble plume of arbitrary depth and gasflow rate, values for four parameters are required. These are the bubble 'slip speed' u_b, the gas/velocity radius ratio λ, the entrainment coefficient α, and the ratio of total momentum flux to the momentum flux carried by the mean flow, which is called γ. The effects of expected variations from the values of u_b and λ that will be estimated

subsequently have been found to be small by numerical tests. A major purpose of this paper is to use experimental results to establish functional relationships between plume properties and α and γ.

2. Theory

2.1. *The integral plume equations*

The integral plume theory is based on a principle of local similarity for which radial profiles of velocity have similar forms at different heights, as do the radial profiles of density defect. These quantities can then be specified by their centreline values $U(z)$ and $S(z)$, and their characteristic radii $b(z)$ and $\lambda b(z)$.

The gas is presumed to follow the isothermal expansion law, and mean pressure variations on horizontal planes are presumed to be small enough to have only negligible effects on the plume dynamics. Under these conditions, for a liquid of depth H, the gas density $\rho_g(z)$ is given by

$$\rho_g(z) = \frac{\rho_T(H_B - z)}{H_T}, \tag{2.1}$$

where ρ_T is the gas density at a pressure of one atmosphere, H_T is the atmospheric pressure head and H_B is the pressure head at the level of gas release:

$$H_B = H_T + H. \tag{2.2}$$

The integral plume equations will involve the local mean gas fraction $f(r, z)$, which is given by

$$f(r, z) = \frac{\rho_w - \rho_p(r, z)}{\rho_w - \rho_g(z)}, \tag{2.3}$$

and the local gas velocity, which will be approximated as the sum of the local liquid speed $u(r, z)$ and a constant slip velocity u_b, to approximate the effect of the rise velocity of the bubble relative to the liquid. $q(z)$, $Q(z)$, $M(z)$ and $B(z)$, the gas volume flux, the liquid volume flux, the momentum flux and the buoyancy per unit height respectively, are expressed in terms of local properties as

$$q(z) = 2\pi \int_0^\infty [u(r, z) + u_b] f(r, z)\, r\, dr, \tag{2.4}$$

$$Q(z) = 2\pi \int_0^\infty u(r, z)\,[1 - f(r, z)]\, r\, dr, \tag{2.5}$$

$$M(z) = 2\pi\gamma \int_0^\infty \{u^2(r, z)\,\rho_w\,[1 - f(r, z)] + [u(r, z) + u_b]^2\,\rho_g(z) f(r, z)\}\, r\, dr. \tag{2.6}$$

$$B(z) = 2\pi g \int_0^\infty [\rho_w - \rho_g(z)]\, f(r, z)\, r\, dr. \tag{2.7}$$

γ is called the momentum amplification factor and $(\gamma - 1)/\gamma$ is the fraction of the mean momentum flux that is carried in the turbulence. g is the acceleration due to gravity.

Closure of the integral plume equations requires a relationship between local plume properties and the rate of increase with height of the liquid volume flux. Ditmars & Cederwall (1974), Fannelop & Sjoen (1980), and Milgram & Van Houten (1982) all used an entrainment hypothesis for the needed relationship, and this will be adopted here. It is

$$\frac{dQ}{dz} = 2\pi\alpha b(z)\, U(z). \tag{2.8}$$

where α is the entrainment coefficient. However, whereas all previous investigators considered the entrainment coefficient as a constant to be specified for any particular plume, here it will be considered to be dependent upon local plume properties.

The three integral plume equations can now be determined. The first is the conservation-of-liquid equation (2.8). The second is the conservation-of-gas equation, which can be expressed as

$$\frac{q_T H_T}{H_B - z} = q(z). \tag{2.9}$$

where q_T is the gas volume flow rate at a pressure of one atmosphere. The third equation results from equating the buoyancy per unit height to the spatial rate of change of momentum flux.

$$B(z) = \frac{\mathrm{d}M}{\mathrm{d}z}. \tag{2.10}$$

2.2. *Equations for Gaussian profiles of velocity and density defect*

Experimental evidence shows that the radial profiles of velocity and density defect are well approximated by Gaussian curves, so (1.1) and (1.2) will be used henceforth. For these profiles (2.4)–(2.7) become

$$q(z) = \frac{S(z)\,\pi\lambda^2 b^2(z)}{\rho_w - \rho_g(z)}\left[\frac{U(z)}{1+\lambda^2} + u_b\right], \tag{2.11}$$

$$Q(z) = \pi U(z)\, b^2(z)\left\{1 - \frac{\lambda^2 S(z)}{[1+\lambda^2][\rho_w - \rho_g(z)]}\right\}. \tag{2.12}$$

$$M(z) = \pi b^2(z)\,\gamma\left\{U^2(z)\left[\frac{\rho_w}{2} - \frac{\lambda^2 S(z)}{1+2\lambda^2}\right] + \frac{\lambda^2 u_b \rho_g(z)\, S(z)}{\rho_w - \rho_g(z)}\left[\frac{2U(z)}{1+\lambda^2} + u_b\right]\right\}. \tag{2.13}$$

$$B(z) = \pi g \lambda^2 S(z)\, b^2(z). \tag{2.14}$$

The plume equations (2.8)–(2.10) then become

$$2\alpha U(z)\, b(z) = \frac{\mathrm{d}}{\mathrm{d}z} U(z)\, b^2(z)\left\{1 - \frac{\lambda^2 S(z)}{[1+\lambda^2][\rho_w + \rho_g(z)]}\right\}. \tag{2.15}$$

$$\frac{q_T H_T}{H_B - z} = \frac{\pi\lambda^2 b^2(z)\, S(z)}{\rho_w - \rho_g(z)}\left[\frac{U(z)}{1+\lambda^2} + u_b\right]. \tag{2.16}$$

$$g\lambda^2 S(z)\, b^2(z) = \frac{\mathrm{d}}{\mathrm{d}z}\gamma b^2(z)\left\{U^2(z)\left[\frac{\rho_w}{2} - \frac{\lambda^2 S(z)}{1+2\lambda^2}\right] + \frac{\lambda^2 u_b \rho_g(z)\, S(z)}{\rho_w - \rho_g(z)}\left[\frac{2U(z)}{1+\lambda^2} + u_b\right]\right\}, \tag{2.17}$$

with $\rho_g(z)$ given by (2.1).

2.3. *Initial conditions near the bottom of the zone of established flow*

Equations (2.15)–(2.17) can be integrated upward numerically if all parameters are known and if conditions near the bottom of the zone of established flow are known so that the integration can be started. Equation (2.16) for the conservation of gas is valid, so two additional conditions are required. The precise determination of these requires unavailable information about the zone of flow establishment, but suitable approximations for most conditions can be made. The reasons for this are that over most of the extent of the plume the momentum gained in the zone of established flow dominates the momentum gained in the zone of flow establishment, and solutions to the plume equations are generally particularly stable to perturbations in initial conditions.

The momentum flux at the height z_E, where the integration is to be started, is estimated as the sum of the momentum flux coming from the gas outlet and an estimate of the buoyancy in the zone beneath this height. To minimize the error of this estimate, z_E should be chosen as low as possible so that the buoyancy beneath it is minimized. However, as the height of the gas outlet is approached there is expected to be more error in the first part of the integration due to inaccuracies in both the Gaussian approximations and the entrainment hypothesis. The best choice for z_E is the one that gives the best balance between these influences. Although this is not known exactly, a reasonable position would seem to be the greater of five gas outlet diameters D and the height of the zone of flow establishment for single-phase plumes given by Chen & Rodi (1980). This is

$$z_E = \min \left\{ \begin{matrix} 5D \\ 10u_0\left(\frac{D}{g}\right)^{\frac{1}{2}}\left[\frac{\rho_g(0)}{\rho_w}\right]^{\frac{1}{2}} \end{matrix} \right\}. \tag{2.18}$$

where u_0 is the gas velocity at the outlet as determined from the gas volume flow rate and the area of the gas outlet.

Estimating the mean gas speed below $z = z_E$ as $\frac{1}{2}u_0$, the estimate for the momentum flux becomes

$$M(z_E) = q_T \rho_g(H)\, u_0 + \frac{2q(\frac{1}{2}z_E}{u_0}[\rho_w - \rho_g(\tfrac{1}{2}z_E)]\, g z_e. \tag{2.19}$$

Finally, the centreline plume density defect is estimated as

$$S(z_E) = \tfrac{1}{2}\rho_w. \tag{2.20}$$

It must be emphasized that these cavalier estimates of $M(z_E)$ and $S(z_E)$ are not represented as accurate values for the top of the zone of flow establishment, but rather are reasonable values for beginning the numerical integration at $z = z_E$. Figure 1 is an example of the insensitivity of results over most of the plume of the numerical integration to reasonable variations in the initial conditions.

2.4. *Theoretical framework for analysis of velocity measurements*

The measurement data that will be used to determine the relationship between local plume properties and both the entrainment coefficient α and the momentum-flux amplification factor γ are the laboratory experiments of Fannelop & Sjoen (1980) and of Milgram & Van Houten (1982) as well as the larger-scale experiments described subsequently. All of these experiments included measurements of radial profiles of vertical velocity, but profiles of gas fraction and momentum flux were only measured in the second study. For the other experiments these quantities must be determined by application of the plume theory to the velocity measurements, and for consistency this procedure will be applied to all of the data. Application of the theory requires *a priori* specification of the bubble 'slip velocity' u_b and of the gas/velocity radius ratio λ.

Photographic measurements of bubble sizes made by the author (for air-bubble plumes in water) showed that most of the gas was carried by bubbles whose volumes ranged from 0.01 to 33 cm^3. Of these, most of the bubbles had volumes between 0.02 and 0.5 cm^3, for which Haberman & Morton (1954) found rise velocities in still water between 0.23 and 0.25 m/s. However, the larger and faster-moving bubbles contain so much more volume than the smaller bubbles that the average gas slip speed exceeds 0.25 m/s. Haberman & Morton found a rise velocity of 0.45 m/s for 33 cm^3 bubbles, and the average gas speed is certainly less than this value. For the

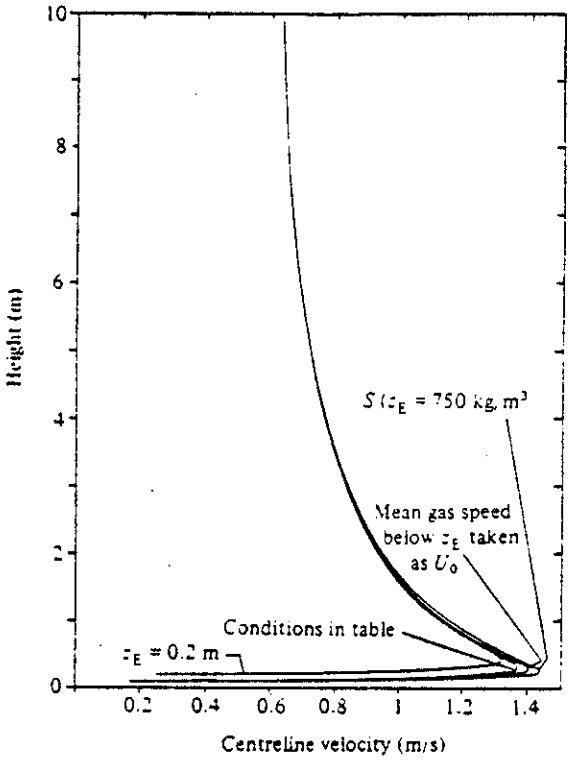

FIGURE 1. The effect of variations in initial conditions for starting the numerical integrations. Conditions are as listed below except for notations on individual curves: $H = 10$ m, $z_E = 0.1$ m, $g = 9.81$ m^2/s, $q = 0.01$ normal m^2/s, $S(z_E) = 500$ kg/m^3, $u_0 = 25$ m/s, $\rho_T = 1.3$ kg/m^3, $\rho_w = 1000$ kg/m^3, $\lambda = 0.8$, $\gamma = 1.5$, $\alpha = 0.08$, $u_b = 0.35$ m/s, mean gas speed below z_E taken as $\frac{1}{2}u_0$.

subsequent application of the theory here, a value of 0.35 m/s is used. Figure 2 shows an example of the results of numerical integration of the plume equations (2.15)–(2.17) for four different values of u_b; 0, 0.30, 0.35 and 0.40 m/s. An 0.05 m/s variation in u_b changes calculated vertical velocities by about 3 %, but changing u_b from 0.35 m/s to zero changes calculated vertical velocities by about 20 %. Hence estimating u_b to within ± 0.05 m/s can be expected to give relatively accurate results, but u_b cannot be neglected altogether.

By comparing measured gas fraction profiles with measured velocity profiles, Milgram & Van Houten found an average value for λ of 0.8. No other quantitative data are available. The other plumes considered here have larger sizes and liquid velocities, but the same bubble sizes. Physical reasoning suggests that these larger plumes would have larger values of λ (although still less than 1.0). On the other hand, Fannelop & Sjoen recommend $\lambda = 0.65$. A value of 0.8 will be used here in the analysis of the measurements and this is justified, in part, by the fact that a change in λ of the order of 0.1 makes very little difference to the results. Figure 3 shows theoretical results for $\lambda = 0.8$ and $\lambda = 0.9$. The effect of the variation is seen to be very small indeed.

The Gaussian approximations given by (1.1) and (1.2) for radial profiles of velocity and density defect will be used. For each measured radial profile at a height z, $U(z)$ and $b(z)$ are determined by a fit of (1.1) to the data. The local gas density is given by (2.1) and the local gas volume flow rate is given by the left-hand side of (2.16).

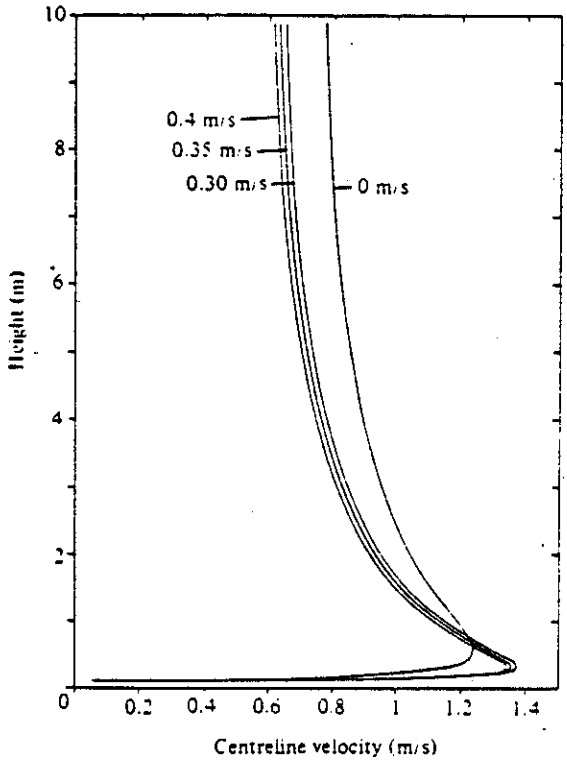

FIGURE 2. Effect of gas-bubble slip speed on solution to the plume equations. The bubble slip speeds used in the calculations are shown on each curve. Other conditions are as given in figure 1.

The local density defect can then be determined from (2.11) as

$$S(z) = \frac{[\rho_w - \rho_g(z)]\, q(z)}{\pi\lambda^2 b^2(z)\,[\bar{U}(z)/(1+\lambda^2) + u_b]}. \tag{2.21}$$

The local momentum amplification factor $\gamma(z)$ will be obtained as the ratio of the total local momentum flux M_T to the momentum flux of the mean flow M_m:

$$\gamma(z) = \frac{M_T(z)}{M_m(z)}, \tag{2.22}$$

where $M_m(z)$ is obtained from (2.13) with γ set equal to 1. The total momentum flux at height z will be calculated as

$$M_T(z) = M_T(z_B) + \int_{z_B}^{z} B(z')\,dz'. \tag{2.23}$$

where the buoyancy per unit height $B(z)$ is given by (2.14).

The height z_B will be taken as the lowest height in the zone of established flow at which conditions are measured or estimated. The momentum flux at z_B is estimated in the fashion of (2.19), but, since z_B is generally considerably greater than z_E, a different estimate for the mean gas speed below z_B is required. Within a short distance above the height of gas release, the moving material involves a volume flux of water that is of the same order of magnitude as the volume flux of the gas. Therefore the average gas speed below z_B will be estimated as the average of $u_0\rho_g(\frac{1}{2}z_B)/\rho_w$ and

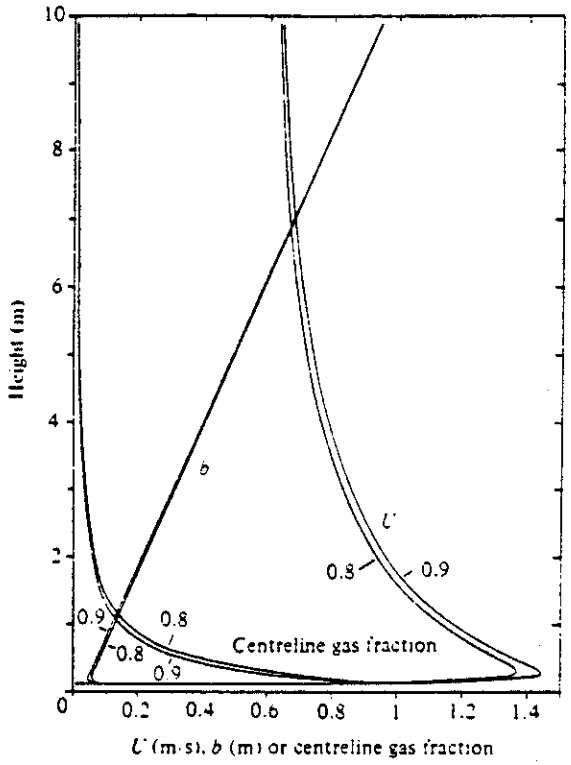

FIGURE 3. Numerical results for gas-velocity radius ratios λ of 0.8 and 0.9. The conditions for the calculations are those given in figure 1. The values for λ are shown on the curves. The difference in plume radius b for the two values of λ is almost indiscernible.

$U(z_B) + u_b$. Then

$$M_T(z_B) = q_T \rho_T u_0 + \frac{2q(\frac{1}{2}z_B)\, g z_B [\rho_w - \rho_g(\frac{1}{2}z_B)]}{u_0 \rho_g(\frac{1}{2}z_B)/\rho_w + U(z_B) + u_b}. \tag{2.24}$$

Because of uncertainty of the buoyancy below z_B, M_T evaluated in this way cannot be expected to be accurate enough for quantitative estimates of γ at z_B. For all measurement heights above z_B that are used, $M_T(z) \gg M_T(z_B)$, so that (2.23) is expected to be accurate enough for making quantitative estimates of γ by use of (2.22).

The other parameter that depends on local conditions to be determined from the experiments is the entrainment coefficient α. Although it could be obtained from experimental determination of the terms in (2.8), the differentiation of the liquid volume flux would accentuate experimental errors. To avoid this, α will be determined by an integration of (2.8) between heights at which radial velocity profiles are measured. Call these heights z_i ($i = 1, 2, \ldots$). Then, under the presumptions that α varies only slightly between z_i and z_{i+1} and that the liquid volume flux Q is well approximated by a linear function in this same height interval, the integral of (2.8) is solved for α as

$$\alpha\left(\frac{z_i + z_{i+1}}{2}\right) = \frac{2}{\pi} \frac{Q(z_{i+1}) - Q(z_i)}{[b(z_i) + b(z_{i+1})][U(z_i) + U(z_{i+1})][z_{i+1} - z_i]}, \tag{2.25}$$

where $Q(z)$ is given by (2.12).

5. Plume wandering

If a radial profile of a physical quantity in a bubble plume is measured by a set of long-term time averages, each at a radius reckoned with respect to a vertical line above the gas outlet, plume wandering can influence the measurements. In the presence of plume wandering, such a measured profile will generally have a smaller centreline value and a larger width than a profile reckoned with respect to the instantaneous location of the centreline.

5.1. *Mathematical model*

Consider a horizontal plane (X, Y) through a bubble plume whose vertical velocity profile is given by

$$u = U\exp\left(-\frac{x^2+y^2}{b^2}\right), \tag{5.1}$$

where x and y are horizontal coordinates relative to the instantaneous centreline location. Furthermore, suppose the location of the centreline is a joint Gaussian random variable (ξ, η), whose probability density function is given by

$$p_{\xi\eta}(\xi_0, \eta_0) = \frac{1}{\pi\sigma^2}\exp\left(-\frac{\xi_0^2+\eta_0^2}{\sigma^2}\right). \tag{5.2}$$

where

$$\sigma^2 = \overline{\xi^2+\eta^2}, \tag{5.3}$$

the overbar designating the statistical average.

Let the origin of the (X, Y)-plane be at the mean centreline location, and consider measurements along $Y = 0$, which will be called u_L:

$$u_L(X) = U\exp\left(-\frac{(X-\xi_0)^2+\eta_0^2}{b^2}\right). \tag{5.4}$$

The statistical average of u_L, which is representative of the long-term time average of u_L, is

$$\overline{u_L(X)} = \int_{-\infty}^{\infty}\int_{-\infty}^{\infty} u_L\, p_{\xi\eta}(\xi_0, \eta_0)\,\mathrm{d}\xi_0\,\mathrm{d}\eta_0. \tag{5.5}$$

Carrying out the integration results in

$$\overline{u_L(X)} = U_L\exp\left(-\frac{X^2}{b_L^2}\right). \tag{5.6}$$

where

$$U_L = \frac{U}{1+\sigma^2/b^2}, \tag{5.7}$$

$$b_L = b(1+\sigma^2/b^2)^{\frac{1}{2}}. \tag{5.8}$$

Since the plume width b at any height is a monotonically increasing function of values of the entrainment coefficient α below this height, plume wandering will result in overestimates of α if they are based on long-term time averages.

Let γ_L be the momentum-flux amplification factor based on the long-term time-average measurements U_L and b_L. Then, for the usual case of $f \ll 1$, $\rho_g \ll \rho_w$, application of (2.22) gives

$$\gamma_L = \gamma\left(1+\frac{\sigma^2}{b^2}\right)^{\epsilon}. \tag{5.9}$$

where $1 \leqslant \epsilon \leqslant 2$ and ϵ increases with increasing $U/[u_b(1+\lambda^2)]$. Therefore, if a plume wanders, the momentum-flux amplification factor is expected to be overestimated if it is based on measurements of long-term time averages.

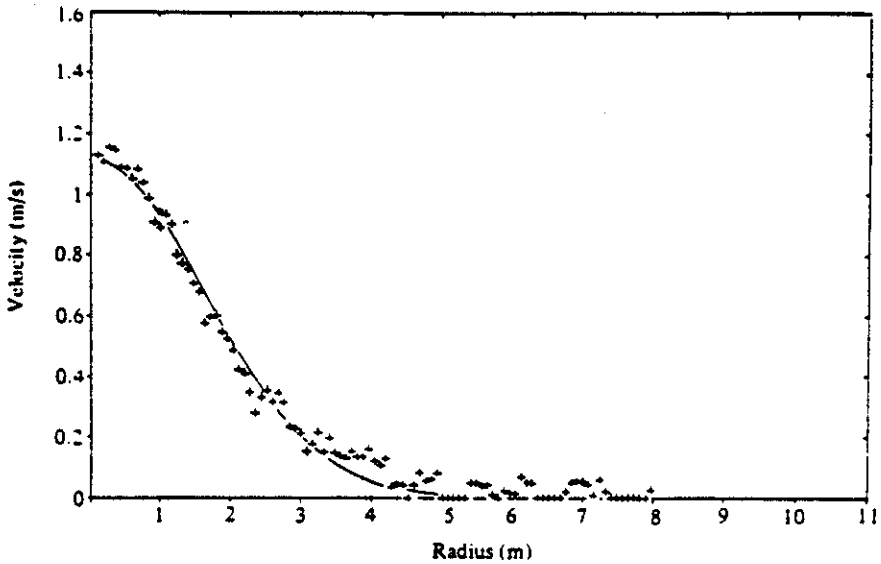

FIGURE 6. An example of reduced data for a radial profile of vertical velocity. The case shown is for a gasflow rate of 0.283 normal m^3/s and a height of 16.47 m above the gas outlet. +, reduced data point; ——, Gaussian-function fit to the data.

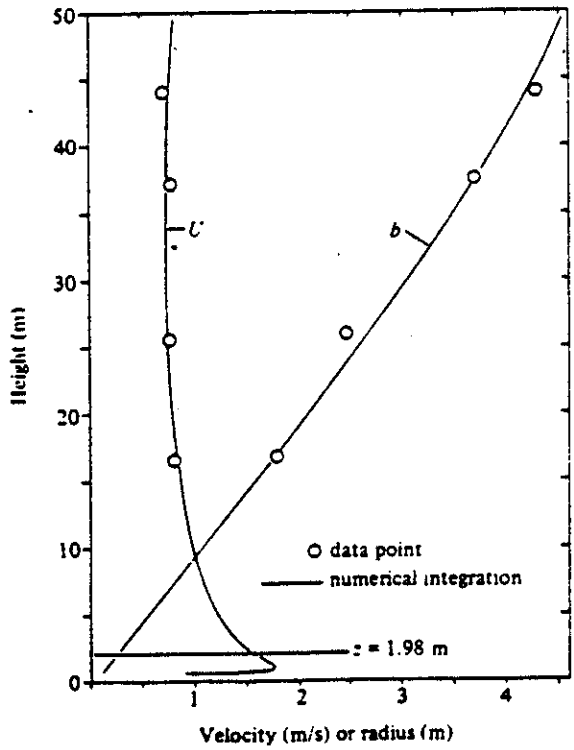

FIGURE 7. Example of a numerical integration used to estimate conditions at a low point in the zone of established flow. The conditions of the example correspond to an airflow rate of 0.118 normal m^3/s in the Bugg Spring experiments. The numerical integration was done with $\lambda = 0.8$, $z_E = 0.5$ m and $S(z_E) = 500$ kg/m^3. The best fit to the data was with $\gamma = 1.1$ and $\alpha = 0.087$, which is the case that is shown.

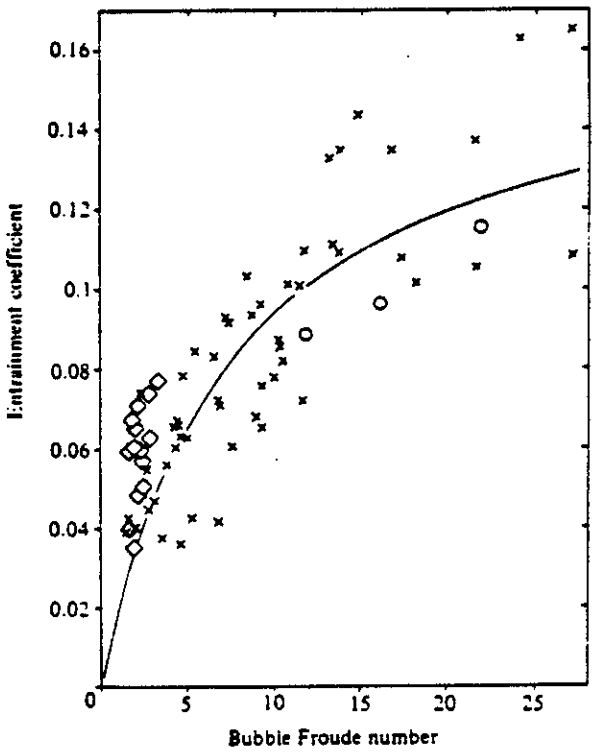

FIGURE 8. The entrainment coefficient α *vs.* the bubble Froude number F_B: ×, calculated from primary data set; ◇, calculated from subsonic-orifice Kobus data; ○, average of calculated values from Topham data. The points shown from left to right are for gas-outlet depths of 60, 60 and 53 m and gasflow rates of 0.367, 0.443 and 0.660 normal m³/s respectively. ——, equation (4.9) with $K = 0.165$ and $A = 7.598$.

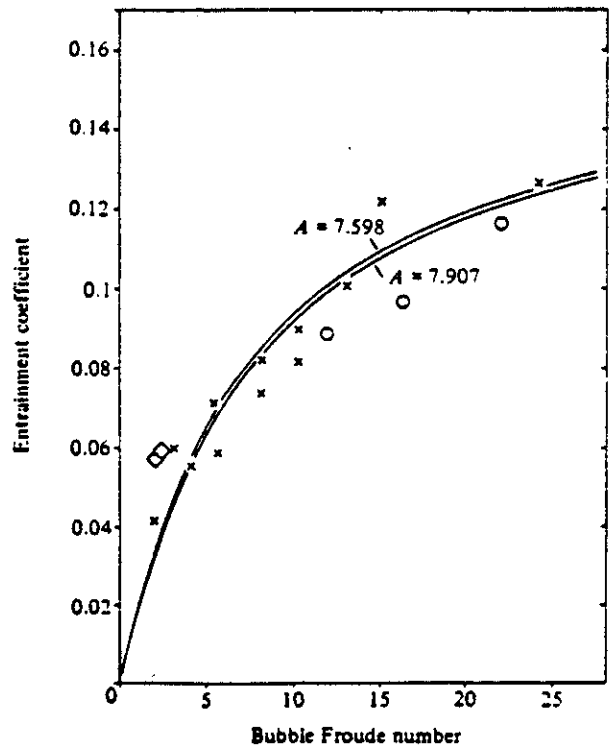

FIGURE 9. Entrainment coefficient *vs.* bubble Froude number for height-averaged data: ×, calculated from primary data set; ◇, calculated from subsonic-orifice Kobus data; ○, calculated from Topham data; ——, equation (4.9) with $K = 0.165$ and A as shown.

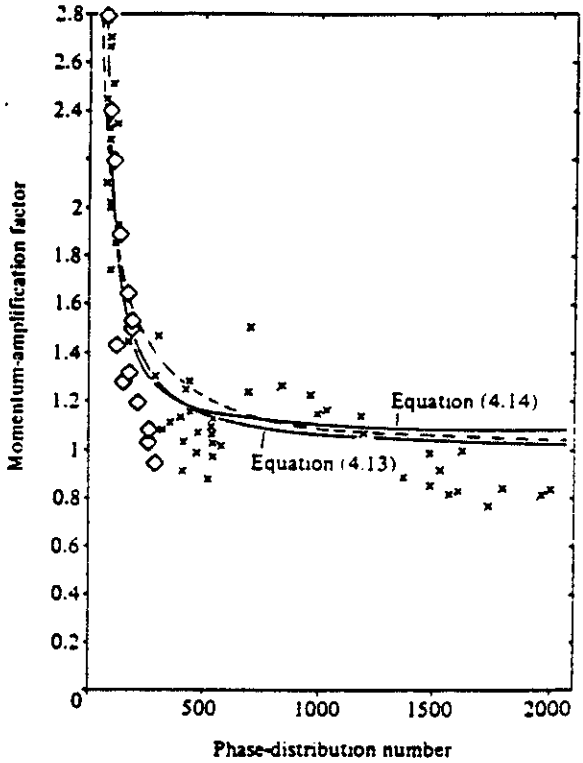

FIGURE 10. The momentum-amplification factor γ *vs.* the phase-distribution number N_P. ×, calculated from primary data set: ◇, calculated from subsonic-orifice Kobus data: ——, equation (4.13) with $C_1 = 377.7$ and $C_2 = 1.25$, and (4.14) with $D_1 = 977$ and $D_2 = 1.5$: – – –, equation (4.13) with $C_1 = 111.3$ and $C_2 = 1.0$.

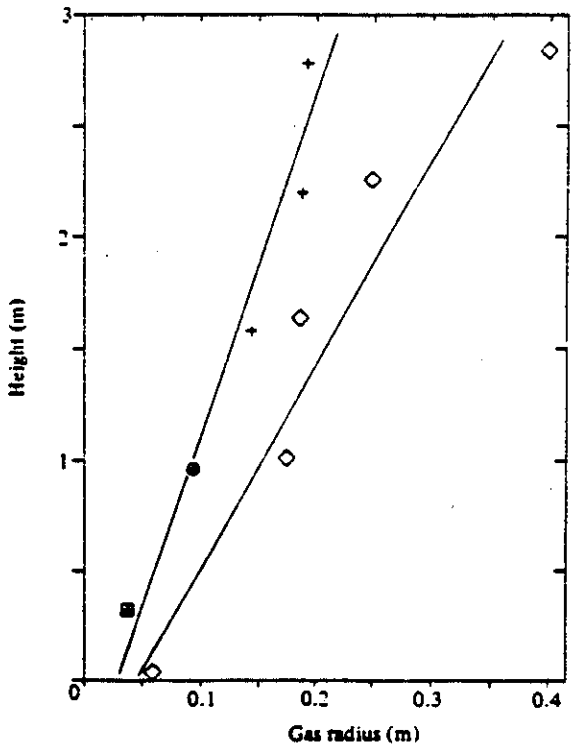

FIGURE 11. Gas radius λb *vs.* height for small-scale plumes: ◇, long-term time average measurements of Fazal; +, measurements of Milgram & Van Houten relative to instantaneous centreline. ⊕, $0.8b$ (from velocity data) for above: ⊞, $0.8 \times$ calculated value of b at z_B for above. Best straight-line fits to data (minimum mean-square error).

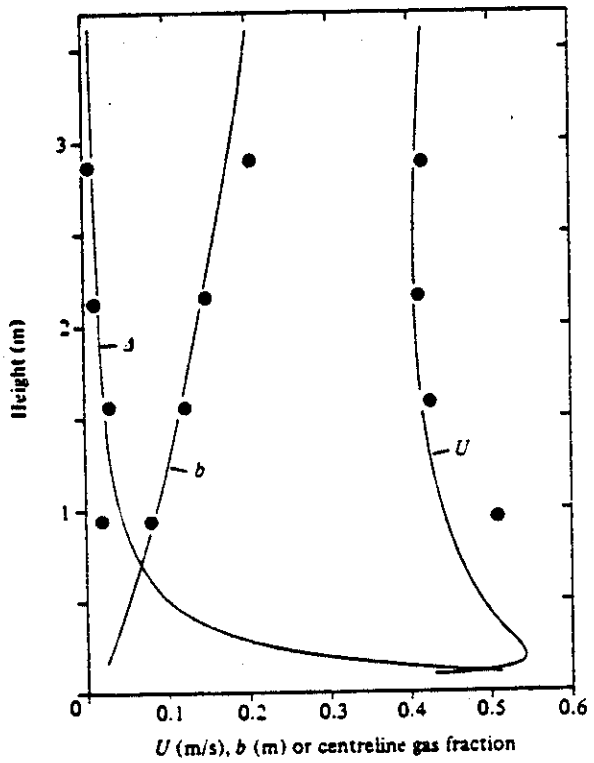

FIGURE 12. Application of the theory to the experimental conditions of Milgram & Van Houten at a gasflow rate of 0.00050 normal m^3/s: ——. numerical solution from the theory: ○. experimental value.

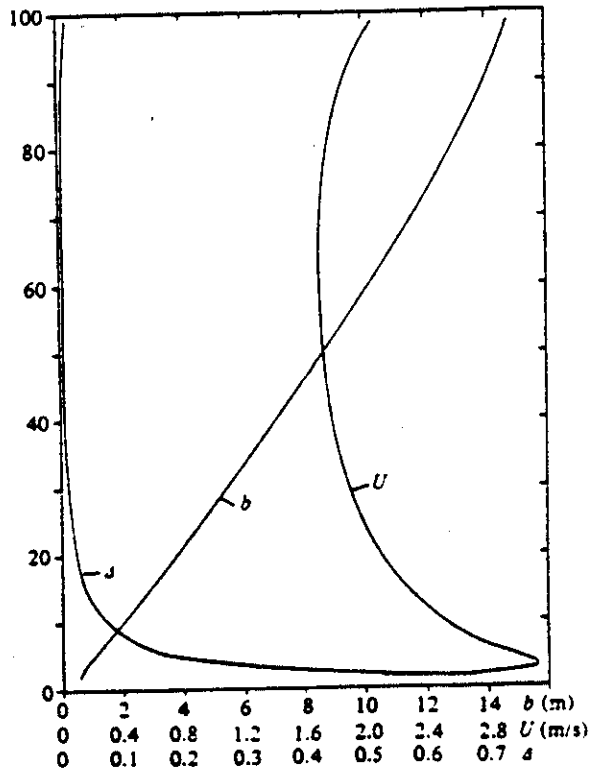

FIGURE 13. Results of numerical integration of the plume equations for a gasflow rate of 10 normal m^3/s in water that is 100 m deep.

	Raw		Smooth						Airflow (normal m³/s)
z	b	U	b	U	q	Q	S	γ	
Bugg Spring experiment data									
1.98	0.162	1.129	0.150	1.127	0.0042	0.077	88.21	—	0.024
16.47	1.540	0.489	1.572	0.506	0.0055	3.929	1.68	1.24	
25.82	1.920	0.515	1.967	0.477	0.0070	5.797	1.40	1.30	
37.81	2.822	0.498	2.466	0.562	0.0109	10.725	1.28	1.16	
43.90	2.470	0.608	2.595	0.553	0.0149	14.535	1.29	1.15	
46.95	2.980	0.538	3.191	0.516	0.0184	16.503	1.35	1.26	
1.98	0.250	1.543	0.257	1.542	0.0204	0.306	118.20	—	0.118
16.47	1.780	0.860	1.732	0.863	0.0272	8.124	5.12	1.23	
25.62	2.399	0.829	2.476	0.823	0.0345	15.834	3.27	1.14	
37.81	3.686	0.833	3.621	0.838	0.0534	34.475	2.34	0.91	
43.90	4.355	0.745	4.384	0.743	0.0735	44.811	2.36	1.07	
1.98	0.338	1.739	0.328	1.740	0.0490	0.552	159.24	—	0.283
16.47	2.320	1.114	2.359	1.109	0.0653	19.351	5.63	0.85	
25.62	3.590	0.970	3.583	0.971	0.0827	39.102	3.39	0.83	
37.81	5.569	0.881	5.365	0.906	0.1280	81.840	2.44	0.77	
43.90	5.976	0.912	6.393	0.861	0.1762	110.436	2.45	0.81	
46.95	7.190	0.794	6.955	0.823	0.2172	124.919	2.62	0.88	
1.98	0.395	2.103	0.412	2.105	0.1022	1.041	182.09		0.590
16.47	2.609	1.326	2.488	1.316	0.1362	25.493	9.44	0.99	
25.62	3.399	1.174	3.615	1.188	0.1723	48.652	6.08	0.99	
37.81	5.356	1.189	5.296	1.184	0.2668	104.145	4.40	0.83	
43.90	6.108	1.171	6.343	1.162	0.3674	146.677	4.28	0.81	
46.95	7.030	1.121	6.944	1.129	0.4527	170.688	4.49	0.84	
Fannelop & Sjoen data									
0.65	0.110	0.985	0.113	0.987	0.0026	0.038	106.55	—	0.005
2.25	0.300	0.750	0.293	0.748	0.0028	0.200	20.41	1.06	
3.85	0.465	0.630	0.465	0.620	0.0031	0.420	9.83	1.08	
5.45	0.600	0.545	0.614	0.569	0.0035	0.672	6.55	1.11	
7.05	0.735	0.585	0.721	0.566	0.0039	0.922	5.35	1.13	
8.65	0.765	0.575	0.769	0.580	0.0044	1.076	5.30	1.25	
0.65	0.135	0.975	0.134	0.978	0.0052	0.052	152.73	—	0.010
2.25	0.310	0.900	0.307	0.893	0.0057	0.260	33.51	1.30	
3.85	0.465	0.815	0.491	0.815	0.0062	0.614	15.18	1.03	
5.45	0.710	0.735	0.665	0.749	0.0069	1.036	9.65	0.99	
7.05	0.775	0.710	0.807	0.696	0.0078	1.420	7.67	1.07	
8.65	0.905	0.655	0.897	0.659	0.0089	1.660	7.31	1.28	
0.65	0.135	1.130	0.134	1.131	0.0078	0.059	206.48	—	0.015
2.25	0.355	1.050	0.382	1.049	0.0085	0.428	32.63	0.91	
3.85	0.540	0.973	0.518	0.974	0.0094	0.816	18.33	0.88	
5.45	0.615	0.900	0.645	0.904	0.0104	1.174	13.79	0.97	
7.05	0.900	0.840	0.781	0.836	0.0117	1.596	11.06	1.07	
8.65	0.965	0.765	0.970	0.766	0.0133	2.255	8.63	1.09	
0.65	0.155	1.170	0.161	1.162	0.0115	0.086	209.19	—	0.0221
2.25	0.350	1.053	0.334	1.077	0.0126	0.369	55.53	1.47	
3.85	0.515	1.020	0.524	1.008	0.0138	0.860	25.88	1.15	
5.45	0.705	0.965	0.720	0.945	0.0153	1.529	15.85	1.02	
7.05	0.930	0.855	0.911	0.881	0.0172	2.286	11.62	1.01	
8.65	1.080	0.815	1.086	0.807	0.0197	2.978	9.83	1.13	
Milgram & Van Houten data									
0.32	0.025	0.682	0.024	0.664	0.0002	0.001	168.73	—	0.00021
0.96	0.063	0.438	0.064	0.432	0.0002	0.006	31.50	2.10	
1.58	0.103	0.321	0.101	0.331	0.0002	0.011	15.03	2.45	
2.20	0.128	0.326	0.129	0.319	0.0002	0.017	9.76	2.32	
2.78	0.144	0.358	0.144	0.360	0.0002	0.023	7.95	1.93	
0.32	0.031	0.774	0.030	0.772	0.0004	0.002	244.43	—	0.00050
0.96	0.082	0.527	0.085	0.537	0.0004	0.012	40.01	1.74	
1.58	0.129	0.456	0.125	0.441	0.0004	0.021	21.40	2.09	
2.20	0.158	0.416	0.161	0.426	0.0004	0.034	13.72	1.85	
2.78	0.201	0.445	0.200	0.442	0.0005	0.056	9.17	1.44	
0.32	0.039	0.903	0.039	0.896	0.0009	0.004	312.58	—	0.00118
0.96	0.100	0.598	0.099	0.628	0.0009	0.019	63.62	2.02	
1.58	0.137	0.553	0.138	0.507	0.0010	0.030	38.18	2.66	
2.20	0.183	0.446	0.182	0.478	0.0010	0.049	23.83	2.51	
2.78	0.248	0.498	0.248	0.490	0.0011	0.064	13.41	1.69	
0.32	0.048	1.021	0.048	1.017	0.0018	0.006	387.81	—	0.00234
0.96	0.117	0.675	0.116	0.691	0.0018	0.028	87.76	2.28	
1.58	0.167	0.594	0.168	0.569	0.0019	0.050	48.91	2.70	
2.20	0.223	0.539	0.222	0.556	0.0020	0.085	29.94	2.35	
2.78	0.288	0.580	0.288	0.575	0.0022	0.149	18.43	1.70	

TABLE 1. The momentum-amplification factors and plume properties obtained from the data analysis at the measurement heights

z	b	U	q	S	W	α	Airflow (normal m³/s)
			Bugg Spring experiment data				
9.23	0.86	0.817	0.0047	44.95	0.290	0.060	
21.05	1.77	0.492	0.0062	1.84	0.183	0.037	
31.71	2.22	0.520	0.0085	1.34	0.244	0.056	0.024
40.86	2.68	0.557	0.0126	1.28	0.122	0.067	
45.43	3.04	0.535	0.0165	1.32	0.061	0.063	
9.23	0.99	1.203	0.0234	61.66	0.290	0.072	
21.05	2.10	0.843	0.0304	4.19	0.183	0.076	0.118
31.71	3.05	0.831	0.0419	2.81	0.244	0.096	
40.86	4.00	0.790	0.0618	2.35	0.122	0.085	
9.23	1.34	1.425	0.0560	82.45	0.290	0.108	
21.05	2.97	1.040	0.0730	4.52	0.183	0.111	
31.71	4.47	0.938	0.1004	2.91	0.244	0.133	0.283
40.86	5.88	0.883	0.1483	2.44	0.122	0.144	
45.43	6.67	0.842	0.1946	2.53	0.061	0.135	
9.23	1.45	1.710	0.1168	95.77	0.290	0.108	
21.05	3.05	1.252	0.1521	7.76	0.183	0.106	
31.71	4.46	1.186	0.2094	5.24	0.244	0.137	0.590
40.86	5.82	1.173	0.3091	4.34	0.122	0.163	
45.43	6.64	1.146	0.4056	4.39	0.061	0.165	
			Fannelop and Sjoen data				
1.45	0.20	0.868	0.0027	63.48	0.162	0.092	
3.05	0.38	0.684	0.0030	15.12	0.162	0.084	
4.65	0.54	0.594	0.0033	8.19	0.162	0.078	0.005
6.25	0.67	0.568	0.0037	5.95	0.162	0.066	
7.85	0.75	0.573	0.0041	5.33	0.162	0.036	
1.45	0.22	0.935	0.0054	93.12	0.162	0.101	
3.05	0.40	0.854	0.0060	24.34	0.162	0.103	
4.65	0.58	0.782	0.0066	12.42	0.162	0.093	0.010
6.25	0.74	0.722	0.0073	8.66	0.162	0.072	
7.85	0.85	0.678	0.0083	7.49	0.162	0.041	
1.45	0.25	1.090	0.0082	119.56	0.162	0.135	
3.05	0.44	1.011	0.0089	25.48	0.162	0.087	
4.65	0.58	0.939	0.0099	16.06	0.162	0.065	0.015
6.25	0.71	0.870	0.0110	12.42	0.162	0.068	
7.85	0.88	0.801	0.0125	9.84	0.162	0.093	
1.45	0.25	1.120	0.0120	132.36	0.162	0.102	
3.05	0.43	1.042	0.0131	40.71	0.162	0.109	
4.65	0.62	0.976	0.0145	20.87	0.162	0.110	0.0221
6.25	0.82	0.913	0.0162	13.73	0.162	0.101	
7.85	1.00	0.844	0.0184	10.72	0.162	0.082	
			Milgram and Van Houten data				
0.64	0.04	0.548	0.0002	100.11	0.175	0.045	
1.27	0.08	0.381	0.0002	23.27	0.169	0.040	0.00021
1.89	0.12	0.325	0.0002	12.39	0.169	0.043	
2.49	0.14	0.340	0.0002	8.85	0.158	0.039	
0.64	0.06	0.654	0.0004	142.22	0.175	0.065	
1.27	0.10	0.489	0.0004	30.70	0.169	0.047	0.00050
1.89	0.14	0.434	0.0004	17.56	0.169	0.055	
2.49	0.18	0.434	0.0004	11.44	0.158	0.074	
0.64	0.07	0.762	0.0009	188.10	0.175	0.071	
1.27	0.12	0.568	0.0010	50.90	0.169	0.042	0.00118
1.89	0.16	0.493	0.0010	31.01	0.169	0.063	
2.49	0.22	0.484	0.0011	18.62	0.158	0.118	
0.64	0.08	0.854	0.0018	237.78	0.175	0.078	
1.27	0.14	0.630	0.0019	68.33	0.169	0.060	0.00234
1.89	0.19	0.563	0.0020	39.43	0.169	0.083	
2.49	0.25	0.566	0.0021	24.19	0.158	0.121	

TABLE 2. The entrainment coefficients and plume properties at heights midway between measurement heights. The entrainment coefficients have been evaluated by (2.25) and the properties b, U, q and S are the averages of the values above and below the midpoints. W is the distance $z_{i-1}-z_i$ used in (2.25) divided by the total plume height.

	Raw		Smooth						Airflow (normal
z	b	U	b	U	q	Q	S	γ	m³/s)
0.71	0.078	0.390	0.079	0.388	0.0003	0.007	39.96	—	
1.00	0.102	0.380	0.100	0.385	0.0003	0.012	25.98	2.78	
1.50	0.127	0.380	0.130	0.376	0.0003	0.020	15.61	2.40	
2.23	0.173	0.370	0.167	0.367	0.0003	0.032	10.09	2.19	
2.78	0.192	0.350	0.200	0.360	0.0003	0.046	7.40	1.89	0.00040
3.22	0.233	0.400	0.228	0.373	0.0004	0.061	5.86	1.64	
3.76	0.260	0.350	0.261	0.371	0.0004	0.079	4.72	1.50	
4.05	0.276	0.370	0.276	0.361	0.0004	0.086	4.38	1.53	
0.71	0.088	0.530	0.088	0.530	0.0004	0.013	39.53	—	
1.00	0.110	0.530	0.110	0.533	0.0004	0.020	25.77	1.43	
1.50	0.143	0.520	0.144	0.500	0.0004	0.033	15.86	1.28	
2.23	0.192	0.440	0.189	0.463	0.0005	0.052	10.21	1.31	
2.78	0.219	0.490	0.221	0.466	0.0005	0.071	7.79	1.19	0.00057
3.22	0.247	0.480	0.248	0.484	0.0005	0.093	6.33	1.03	
3.76	0.287	0.470	0.285	0.478	0.0005	0.122	5.07	0.94	
4.15	0.315	0.430	0.316	0.426	0.0006	0.133	4.50	1.08	
				Topham data					
5.00	1.591	1.209	1.674	1.238	0.0567	10.859	9.04	—	
14.00	3.383	1.466	3.067	1.375	0.0659	40.599	2.91	0.32	
23.00	4.013	1.191	4.444	1.266	0.0785	78.520	1.75	0.29	0.367
32.00	5.657	1.110	5.430	1.141	0.0970	105.609	1.56	0.36	
42.00	5.606	1.350	5.609	1.262	0.1316	124.681	1.85	0.40	
48.00	5.022	1.550	5.048	1.593	0.1674	127.421	2.47	0.38	
5.00	1.518	1.432	1.544	1.438	0.0685	10.724	11.55	—	
15.00	2.168	1.544	2.053	1.517	0.0809	20.036	7.44	0.64	
24.00	2.718	1.148	2.888	1.187	0.0968	31.050	5.34	0.89	0.443
34.00	4.228	0.904	4.115	0.878	0.1236	46.606	4.08	1.35	
42.70	5.307	1.061	5.339	1.068	0.1629	95.372	2.83	0.79	
4.50	1.232	1.149	1.191	1.226	0.1134	5.388	35.93	—	
7.60	1.448	1.617	1.520	1.501	0.1197	10.814	20.21	1.23	
17.00	3.012	1.545	2.948	1.570	0.1442	42.767	6.27	0.55	0.660
26.00	4.414	1.026	4.467	1.116	0.1792	69.827	4.31	0.80	
32.00	5.303	0.972	5.281	0.877	0.2138	76.660	4.29	1.29	
42.00	5.770	1.201	5.771	1.221	0.3153	127.530	4.29	0.89	

TABLE 3. The momentum amplification factors and plume properties obtained for the Kobus and Topham data from data analysis at the measurement heights

z	b	U	q	S	W	α	Airflow (normal m³/s)
			Kobus data				
0.86	0.09	0.386	0.0003	32.47	0.064	0.074	
1.25	0.12	0.381	0.0003	20.34	0.111	0.057	
1.86	0.15	0.372	0.0003	12.85	0.162	0.048	
2.51	0.18	0.368	0.0003	8.74	0.122	0.060	0.00040
3.00	0.21	0.371	0.0004	6.63	0.098	0.067	
3.49	0.24	0.372	0.0004	5.29	0.120	0.059	
3.90	0.27	0.366	0.0004	4.55	0.064	0.040	
0.86	0.10	0.531	0.0004	32.65	0.064	0.077	
1.25	0.13	0.521	0.0004	20.82	0.111	0.063	
1.86	0.17	0.486	0.0004	13.04	0.162	0.050	
2.51	0.21	0.465	0.0005	9.00	0.122	0.060	0.00057
3.00	0.23	0.475	0.0005	7.06	0.098	0.071	
3.49	0.27	0.481	0.0005	5.70	0.120	0.065	
3.95	0.30	0.452	0.0005	4.78	0.087	0.035	
			Topham data				
9.50	2.37	1.307	0.0610	5.97	0.150	0.170	
18.50	3.76	1.321	0.0716	2.33	0.150	0.135	
27.50	4.94	1.204	0.0867	1.65	0.150	0.081	0.367
37.00	5.52	1.202	0.1117	1.70	0.167	0.046	
45.00	5.33	1.428	0.1473	2.16	0.100	0.010	
10.00	1.80	1.478	0.0742	9.49	0.167	0.056	
19.50	2.47	1.352	0.0881	6.39	0.150	0.058	
29.00	3.50	1.033	0.1085	4.71	0.167	0.069	0.443
38.35	4.73	0.973	0.1405	3.46	0.145	0.195	
6.05	1.36	1.364	0.1165	28.07	0.058	0.151	
12.30	2.23	1.535	0.1308	13.24	0.177	0.138	
21.50	3.71	1.343	0.1598	5.29	0.170	0.96	0.660
29.00	4.87	0.996	0.1949	4.30	0.113	0.037	
37.00	5.53	1.049	0.2548	4.29	0.189	0.140	

TABLE 4. The entrainment coefficients and plume properties at heights midway between measurement heights for the Kobus and Topham data

PLUME THEORY FOR GAUSSIAN RADIAL DISTRIBUTIONS

VERTICAL WATER VELOCITY

$$u(z,r) = u(z)e^{-(r^2/b^2)}$$

DENSITY

$$\rho_w - \rho_p = S(z)e^{-(r^2/\lambda^2 b^2}$$

GAS FRACTION

$$f(z,r) = \frac{S(z)e^{-(r^2/\lambda^2 b^2)}}{\rho_w - \rho_T(H_B - z)/H_T}$$

GAS CONSERVATION

$$q(z) = \frac{S(z)\pi\lambda^2\, b(z)}{\rho_w - \rho(z)}\left[\frac{u(z)}{1+\lambda^2} + u_b\right]$$

WATER TRANSPORT

$$\frac{d}{dz}\left[ub^2\left\{1 - \frac{S\lambda^2}{(1+\lambda^2)\,[\rho_w - \rho(z)]}\right\}\right] = 2\alpha ub$$

MOMENTUM EQUATION

$$\frac{d}{dz}\left[b^2u^2\left\{\frac{\rho_w}{2} - \frac{S\lambda^2}{1+2\lambda^2}\right\} + \frac{b^2\lambda^2 u b_o(z) S}{\rho_w - \rho(z)}\left\{\frac{2u}{(1+\lambda^2)} + u_b\right\}\right] = gS\lambda^2 b^2$$

NOMENCLATURE

f= mean fraction of a volume that is gas

g= gravitational acceleration

r= radial co-ordinate

u= vertical water velocity

u_b= gas bubble slip velocity

H_b= Pressure Head at Sea Bed

H_T= Atmospheric Pressure Head

U_m= Plume Centerline Velocity (sometimes denoted by u)

α= water entrainment coefficient

ρ = mean plume density

ρ_g= gas density

ρ_w= water density

$\bar{S}_m$=S ?

Figure 14

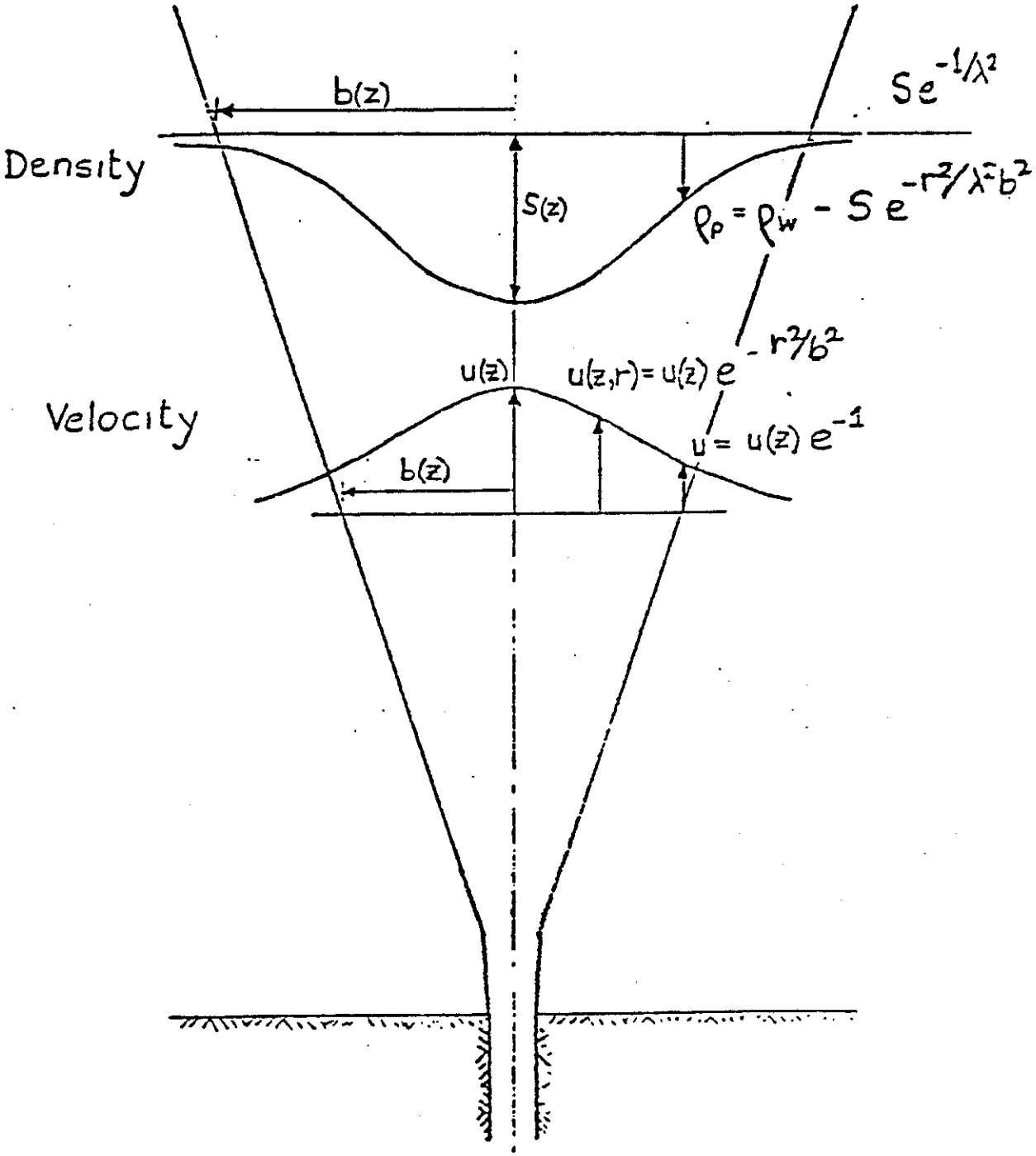

Figure 15 Radial Distribution of Plume Density and Vertical Velocity, [17]

2.5 Analytical and Experimental Results of R.D. Rowe [31].

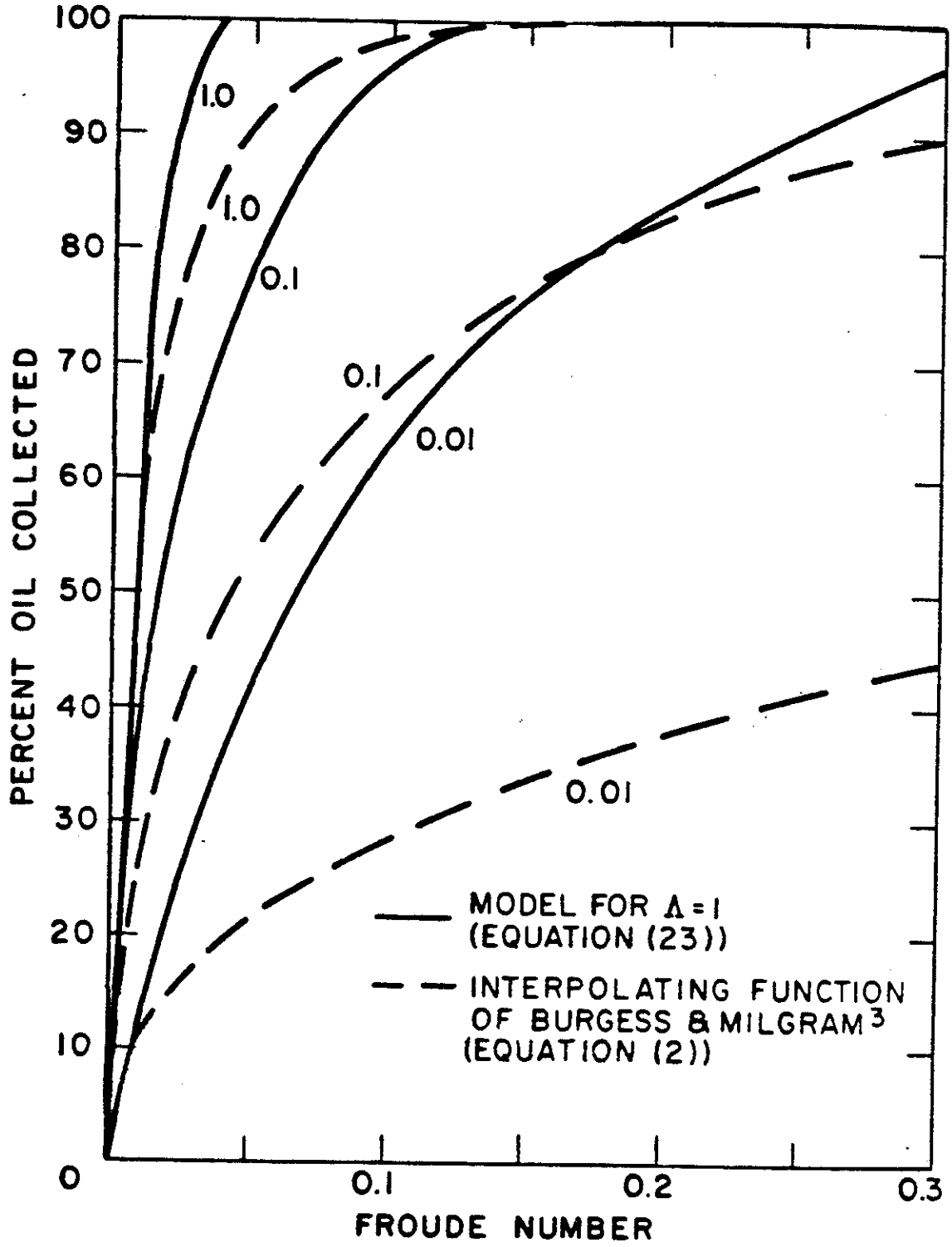

Figure 5. Percent Oil Collected as a Function of Froude Number for Fixed Values of the Phase Ratio. (It should be noted that the Froude numbers are defined differently for the two sets of curves.)

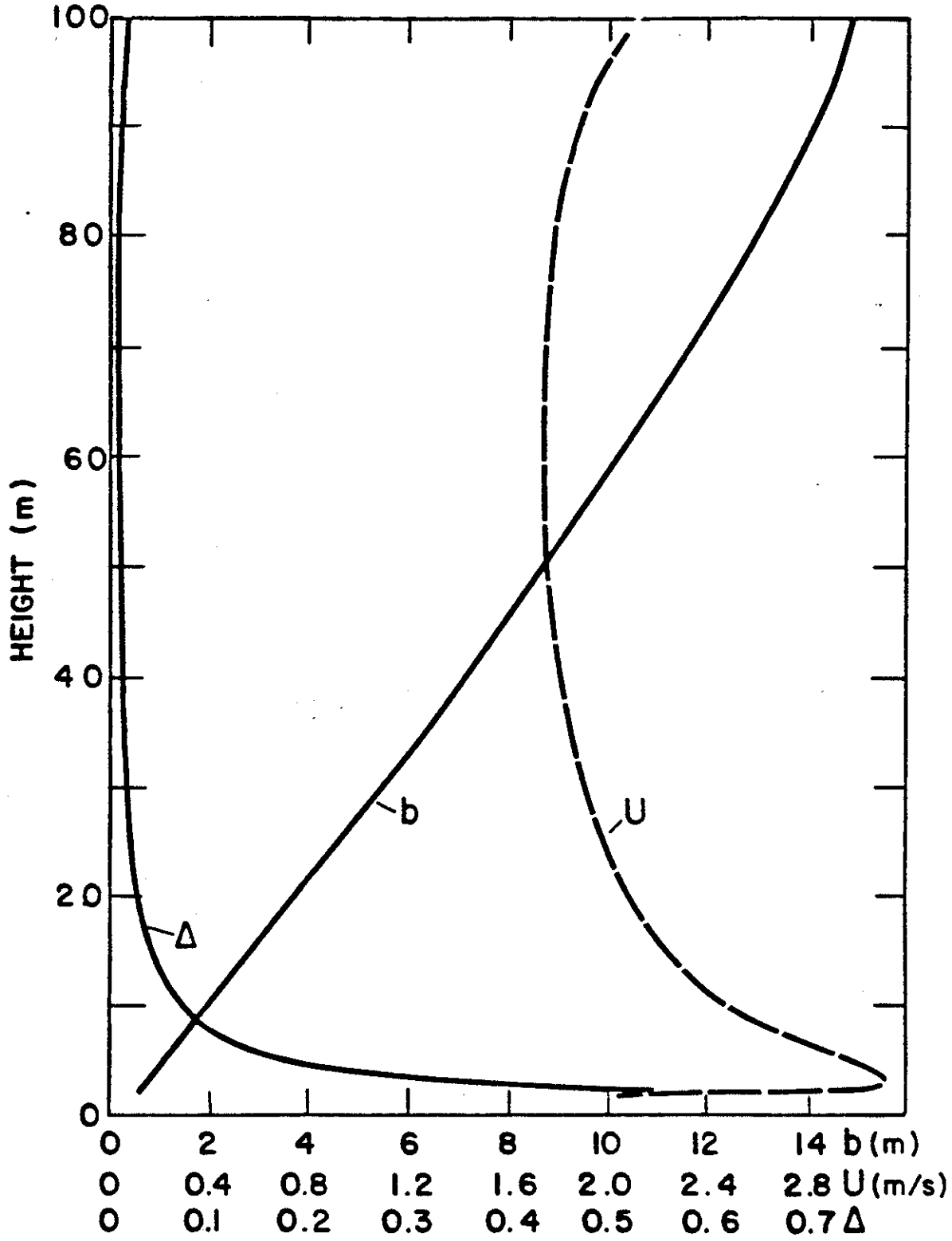

Figure A. Results of Numerical Integration of the Plume Equations for a Gas Flow Rate of 10 nm^3/s in Water that is 100 m Deep.

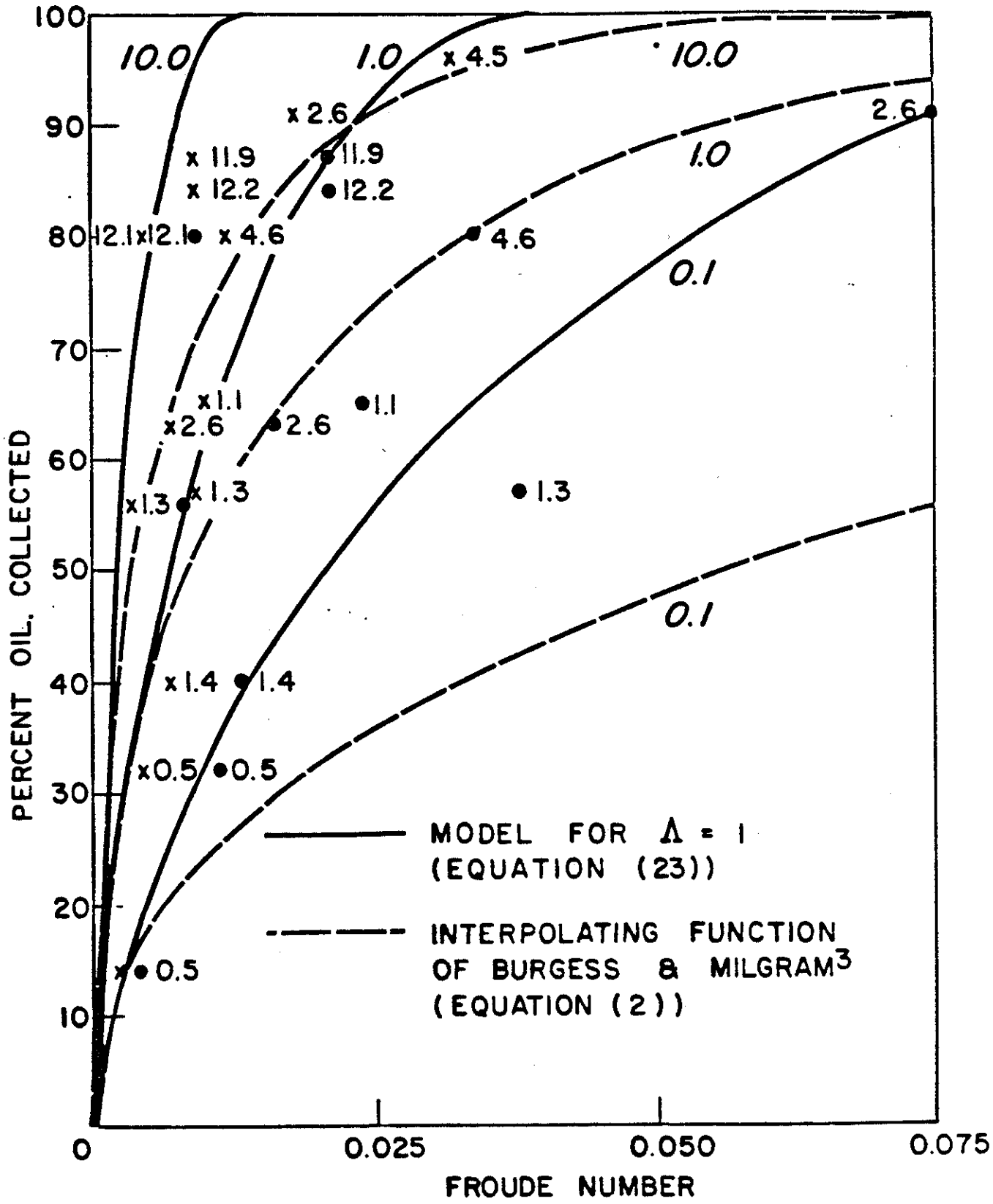

Figure B1. Intermediate-scale Data for the Standard Single Cone Collector. Interpolating function values are denoted by circles; model values are denoted by crosses. The phase ratio is provided beside each data point.

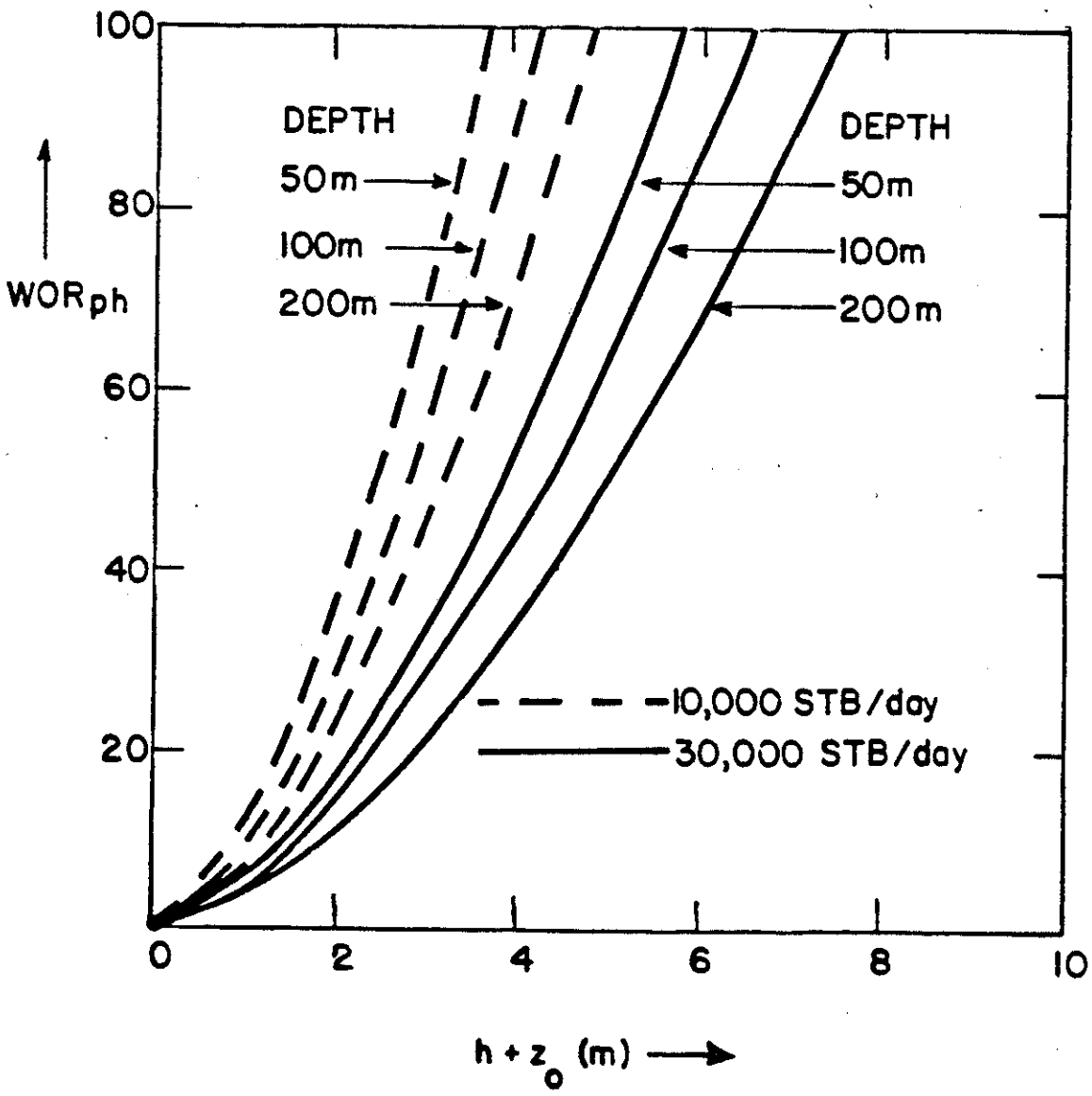

Figure C1. Water to Oil Ratio in the Plume for Full-scale Oilwell Blowouts.

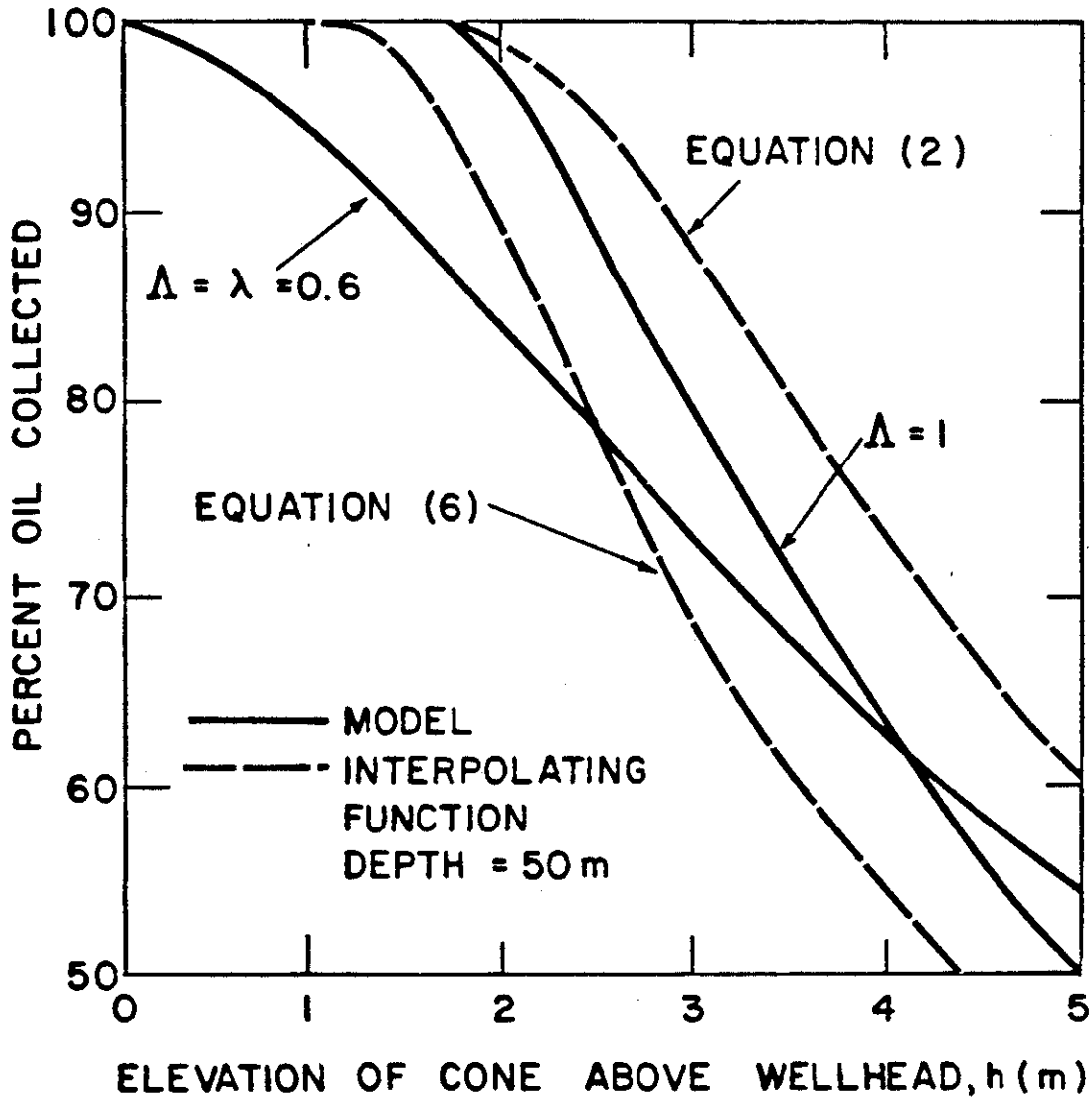

Figure C2. Percent Oil Collected as a Function of the Elevation of the Collection Cone above the Wellhead for a Wellhead Depth of 50 m.

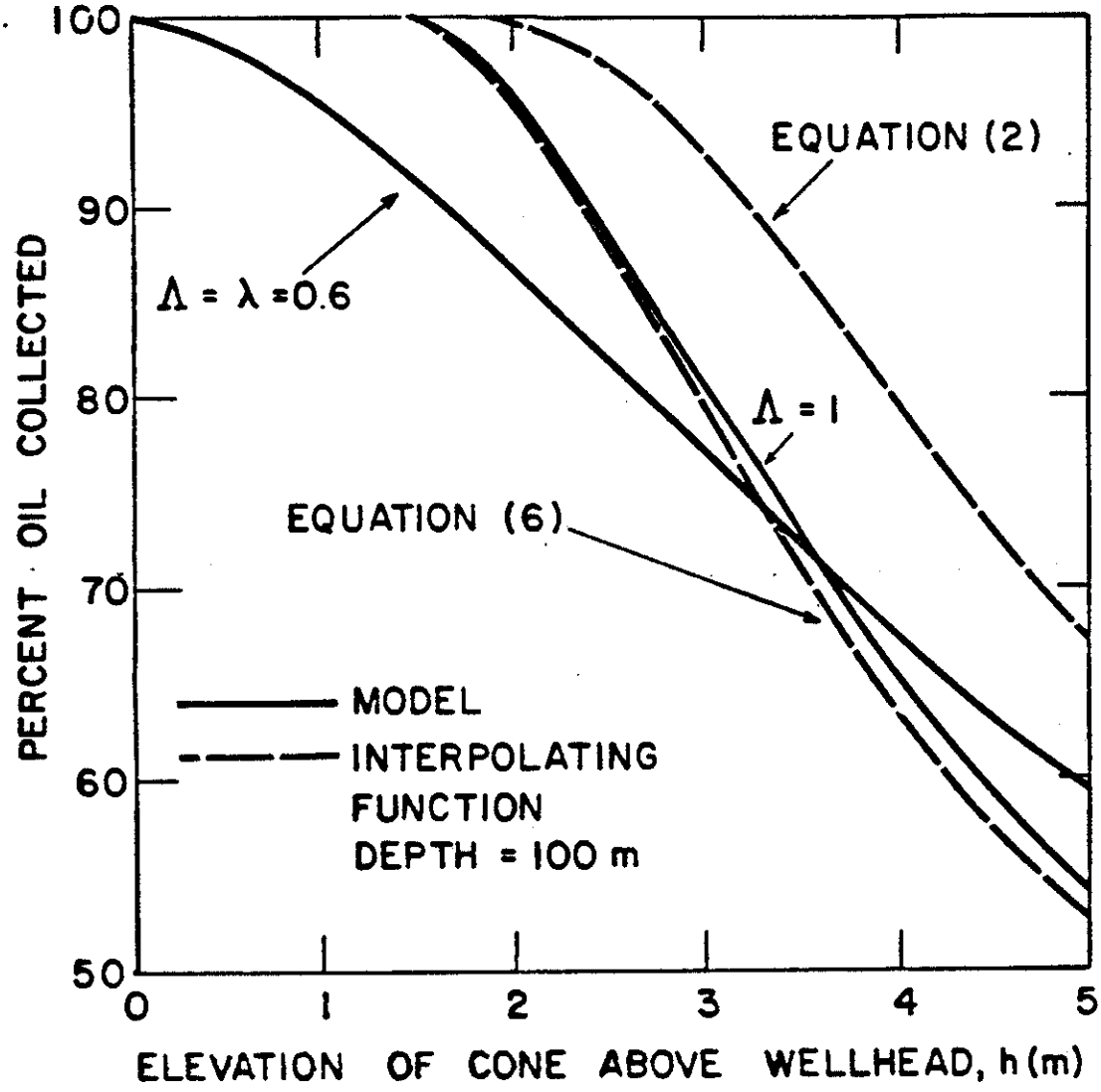

Figure C3. Percent Oil Collected as a Function of the Elevation of the Collection Cone above the Wellhead for a Wellhead Depth of 100 m.

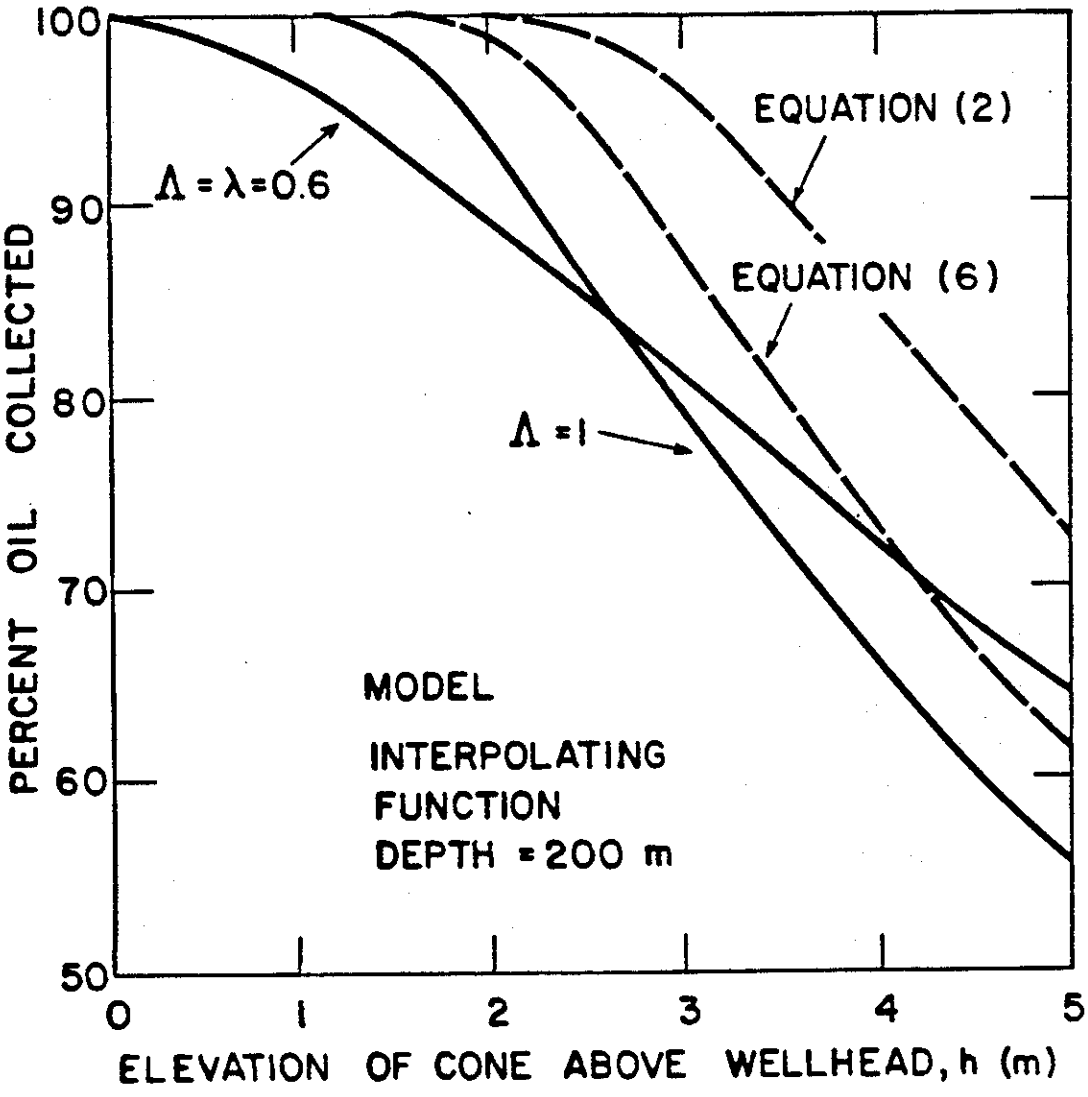

Figure C4. Percent Oil Collected as a Function of the Elevation of the Collection Cone above the Wellhead for a Wellhead Depth of 200 m.

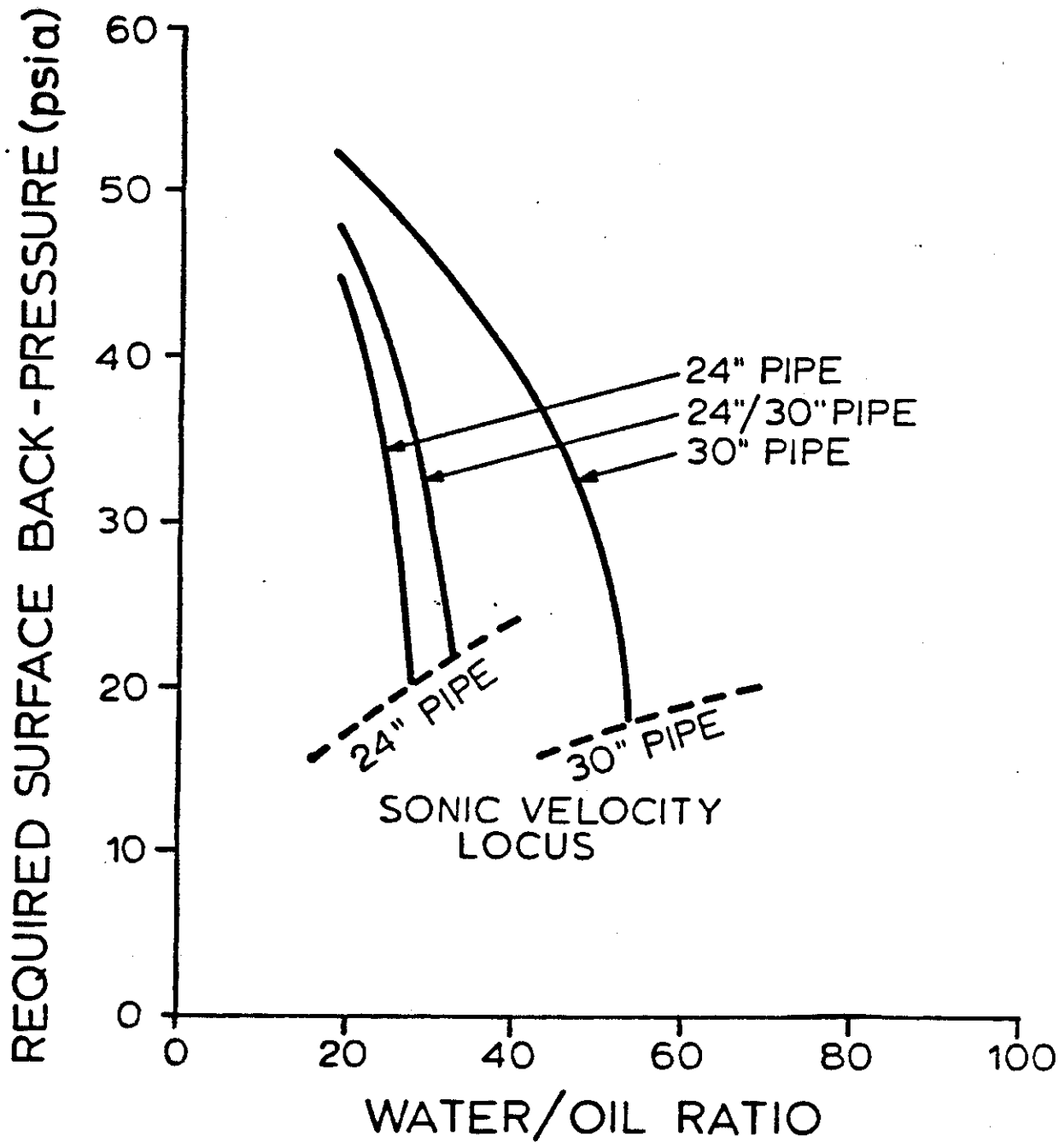

Figure D1. Water to Oil Ratio Capacity of a Riser as a Function of Required Surface Back Pressure For an Entry Depth of 50 m.

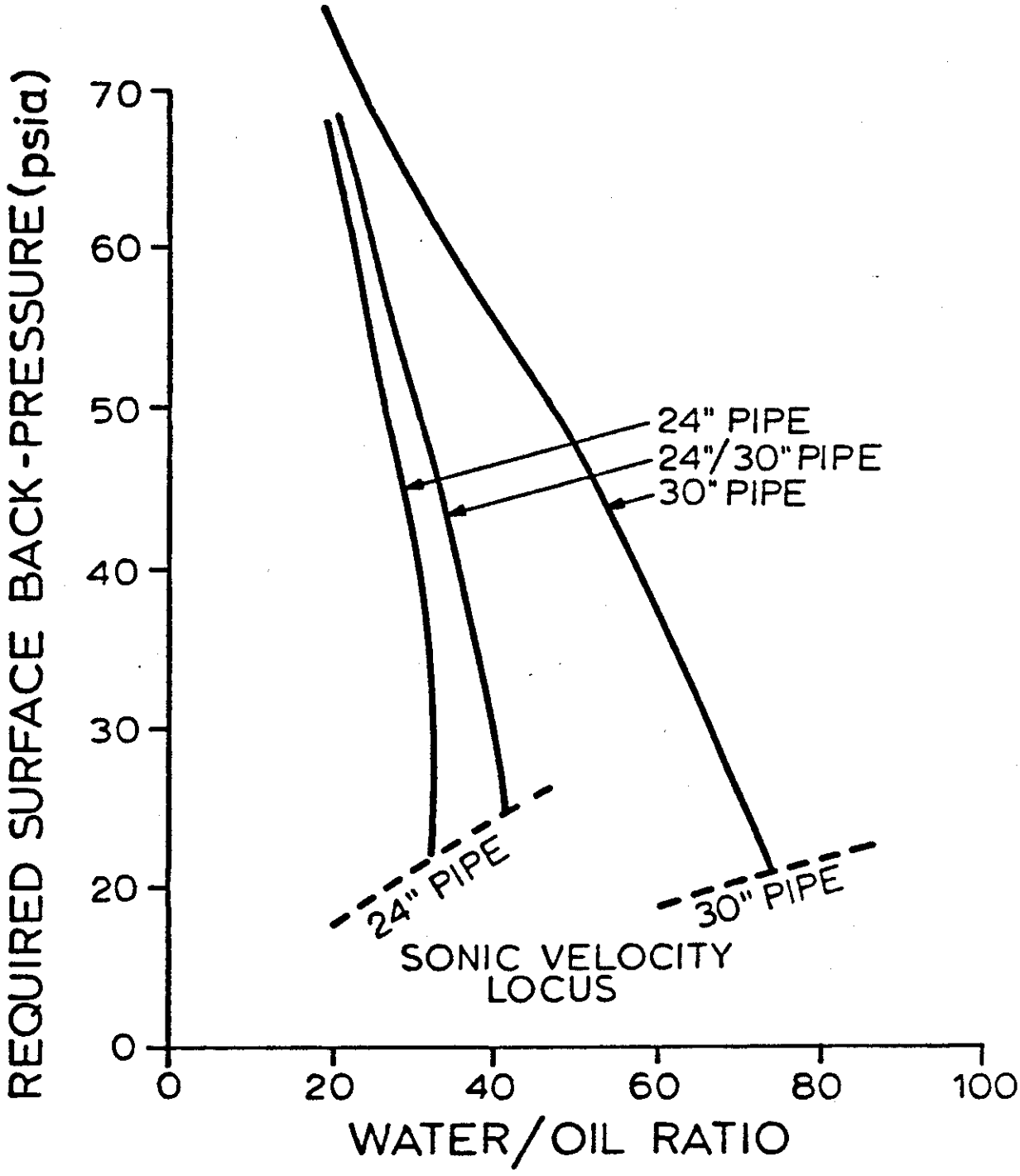

Figure D2. Water to Oil Ratio of a Riser as a Function of Required Surface Back Pressure for an Entry Depth of 100 m.

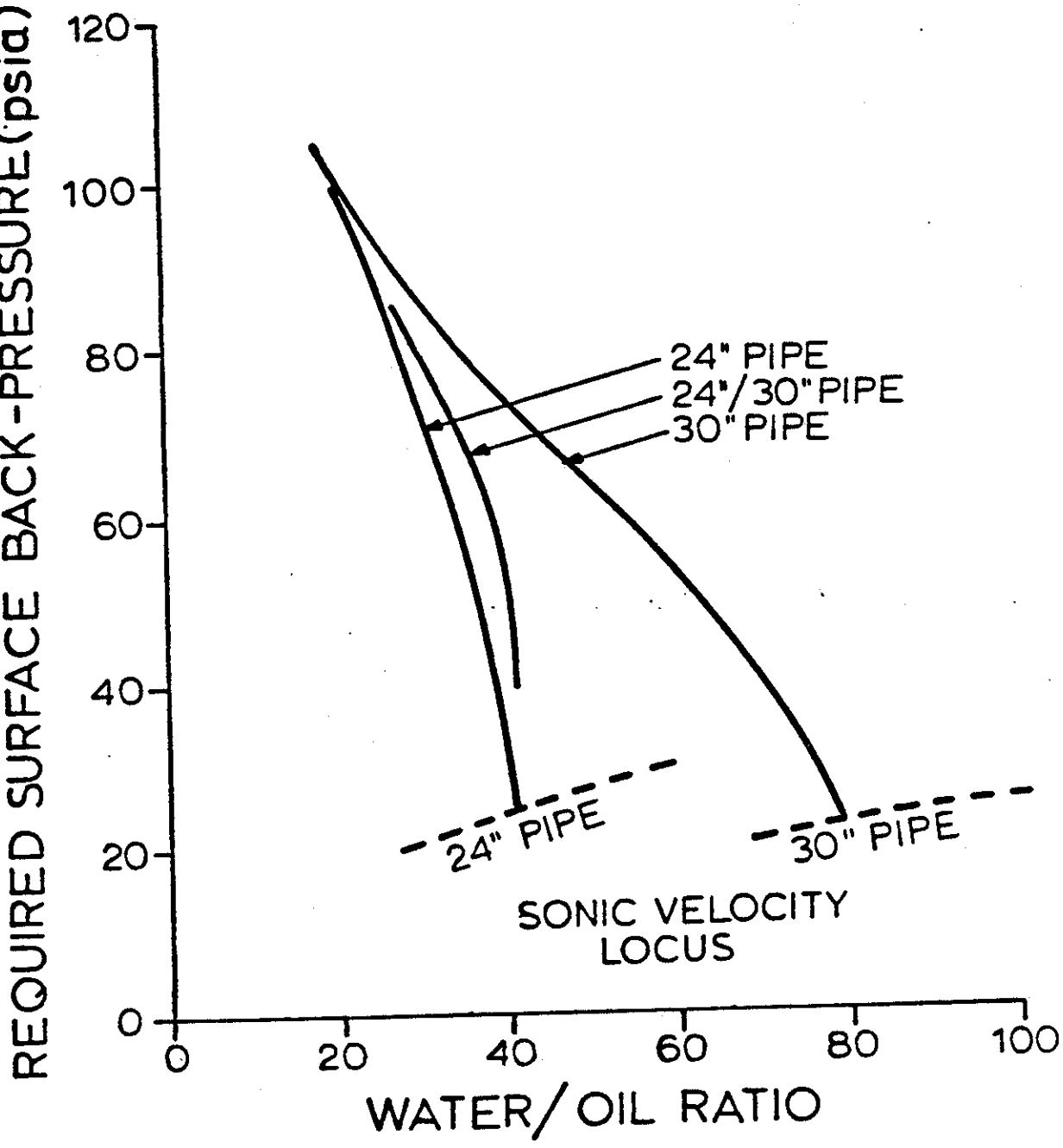

Figure D3. Water to Oil Ratio Capacity of a Riser as a Function of Required Surface Back Pressure for an Entry Depth of 200 m.

2.6. Dr. J.H. Milgrams Calculations of Collection Efficiencies and Related Technical Correspondences for this Study.

Report to Brown and Root Development, Inc.
by Marine Professional Services, Inc. on

PREDICTION OF SUBSURFACE COLLECTOR COLLECTION EFFICIENCIES

INTRODUCTION

The purpose of the work reported here is to provide predictions of the percentage of blowout oil collected for several sets of conditions and parameters in which a subsurface collector ship might operate. The information base for the collector performance is the paper; "Experiments with Scale Models of Oil Collectors for Subsea Well Blowouts - Part II, a copy of which attached to this report. This paper provides a method of predicting collector performance (% of blowout oil collected) in terms of the amounts of liquid and gas flowing into the collector and the vertical distance between the blowing well head and the base of the collector.

A letter from Brown & Root Development, Inc. (copy attached to this report) provides the gas and liquid flow rates for numerous depths and well gas flow rates and for two riser diameters; 20" and 24". These flow rates were used here for making the predictions of collection efficiency. Predictions are provided for single collectors with one or two risers and for double collectors of the type explained in the attached paper, with two risers; each at heights of the collector base above the wellhead of 5, 10, 15, 20 and 25 feet. For interpreting the predictions, the depths provided in the attached July 15 letter need to be considered as the depths of the collector base.

Predictions were made by use of computer programs written in the Fortran language (copies attached) that evaluate equation (6.9) of the attached paper for each of the conditions considered.

SINGLE COLLECTOR WITH ONE RISER

The computer program COLPERF was used for the single collector evaluations. The data file of liquid flow rates, RISER20.DAT was used in the program for the 20" riser and the data file called RISER24.DAT was used for the 24" riser. These data files (attached) are the exact data given in the July 15 letter with data order being the same in the data files as in the letter.

SINGLE COLLECTOR WITH TWO RISERS

Collectors with two 20" risers and collectors with two 24" risers were considered. Data files of flow rates (attached) are called TRISER20.DAT and TRISER24.DAT. These were generated by interpolation and extrapolation on the data of the July 15 letter. To make the files, each riser was considered to carry half the liquid and half the gas, the liquid flow for one riser with half the gas was found from the data in the letter and this flow was doubled to obtain the total flow for two risers.

DOUBLE COLLECTOR WITH TWO RISERS

The configuration for a double collector is described in the attached paper. Such a double collector has improved collection efficiency over that of a single collector with the same liquid and gas flow rates under those conditions for which the single collector efficiency is poor.

The conditions of the July 15 letter have relatively large phase ratios (ratio of liquid to gas volume flows entering the collector). Data in the attached paper for double collector efficiency at large phase ratios can be approximated by:

$$F_d = 1.8(F_s) - 0.8(F_s)^2$$

where:

F_d is the fraction of blowout oil collected by a double collector (collection percentage/100), and

F_s is the fraction of blowout oil collected by a single collector operating at the same gas and liquid flows.

The computer program TCOLPERF (copy attached) uses the above formula for evaluating double collector performance. At the large phase ratios of the conditions in the July 15 letter, optimal operation is for approximately equal flow in each riser so the date files TRISER20.dat and TRISER24.DAT were used for flow rates for the double collector predictions.

Tables of collection efficiencies follow. It should be pointed out that the conditions evaluated, as specified in the July 15 letter have relatively high (favorable) phase ratios; generally greater than one. For significantly lower phase ratios, such as could occur with less depth, more lift or more well gas flow; the single collector can suffer severe reductions in collection efficiency due to the phenomenon of gas lock. This is the condition where entry of liquid into the riser is inhibited by the gas filled zone in the upper portion of the collector. The efficiency reduction with a double collector is less because only the inner collector suffers gas lock; the outer collector does not.

PERCENTAGE OIL COLLECTED FOR ONE 20" RISER.

COLLECTOR HEIGHT = 5.0 feet.

	GAS RATE IN MM SCFD			
DEPTH (ft)	10.0	20.0	30.0	40.0
200.0	100.0	99.8	98.8	96.6
400.0	100.0	100.0	100.0	100.0
600.0	100.0	100.0	100.0	100.0
800.0	100.0	100.0	100.0	100.0
1000.0	100.0	100.0	100.0	100.0

COLLECTOR HEIGHT = 10.0 feet.

	GAS RATE IN MM SCFD			
DEPTH (ft)	10.0	20.0	30.0	40.0
200.0	90.9	81.2	72.8	65.5
400.0	98.1	95.0	90.8	85.8
600.0	99.2	86.3	95.9	93.1
800.0	99.5	98.9	97.8	96.2
1000.0	99.7	99.3	98.6	97.6

COLLECTOR HEIGHT = 15.0 feet.

	GAS RATE IN MM SCFD			
DEPTH (ft)	10.0	20.0	30.0	40.0
200.0	71.5	60.4	52.6	46.4
400.0	85.3	78.0	71.4	65.2
600.0	89.4	65.8	79.8	74.9
800.0	91.4	87.9	84.2	80.4
1000.0	92.4	89.8	86.8	83.8

COLLECTOR HEIGHT = 20.0 feet.

	GAS RATE IN MM SCFD			
DEPTH (ft)	10.0	20.0	30.0	40.0
200.0	57.0	47.2	40.7	35.8
400.0	70.9	63.2	56.9	51.4
600.0	75.9	51.9	65.0	60.2
800.0	78.5	74.0	69.7	65.6
1000.0	79.9	76.3	72.7	69.2

COLLECTOR HEIGHT = 25.0 feet.

	GAS RATE IN MM SCFD			
DEPTH (ft)	10.0	20.0	30.0	40.0
200.0	47.1	38.7	33.2	29.1
400.0	59.6	52.6	47.0	42.2
600.0	64.4	42.6	54.2	49.8
800.0	67.0	62.6	58.5	54.7
1000.0	68.5	64.9	61.3	58.1

C>
PERCENTAGE OIL COLLECTED FOR ONE 24" RISER.

COLLECTOR HEIGHT = 5.0 feet.

	GAS RATE IN MM SCFD			
DEPTH (ft)	10.0	20.0	30.0	40.0
200.0	100.0	100.0	100.0	99.9
400.0	100.0	100.0	100.0	100.0
600.0	100.0	100.0	100.0	100.0
800.0	100.0	100.0	100.0	100.0
1000.0	100.0	100.0	100.0	100.0

COLLECTOR HEIGHT = 10.0 feet.

	GAS RATE IN MM SCFD			
DEPTH (ft)	10.0	20.0	30.0	40.0
200.0	97.6	93.5	88.6	83.5
400.0	99.8	99.4	98.4	97.0
600.0	99.9	99.8	99.6	99.2
800.0	100.0	99.9	99.8	99.7
1000.0	100.0	100.0	99.9	99.9

COLLECTOR HEIGHT = 15.0 feet.

	GAS RATE IN MM SCFD			
DEPTH (ft)	10.0	20.0	30.0	40.0
200.0	83.9	75.4	68.5	62.7
400.0	94.0	90.3	86.3	82.2
600.0	96.2	94.2	92.0	89.4
800.0	97.1	95.9	94.4	92.8
1000.0	97.6	96.7	95.6	94.4

COLLECTOR HEIGHT = 20.0 feet.

	GAS RATE IN MM SCFD			
DEPTH (ft)	10.0	20.0	30.0	40.0
200.0	69.4	60.7	54.3	49.2
400.0	82.3	77.0	72.1	67.5
600.0	86.2	82.7	79.3	75.8
800.0	88.1	85.6	82.9	80.5
1000.0	89.2	87.2	85.1	83.0

COLLECTOR HEIGHT = 25.0 feet.

	GAS RATE IN MM SCFD			
DEPTH (ft)	10.0	20.0	30.0	40.0
200.0	58.2	50.3	44.7	40.4
400.0	71.0	65.5	60.7	56.4
600.0	75.4	71.5	67.9	64.4
800.0	77.6	74.6	71.7	69.1
1000.0	78.9	76.5	74.1	71.8

C>
PERCENTAGE OIL COLLECTED FOR TWO 20" RISERS ON ONE COLLECTOR.

COLLECTOR HEIGHT = 5.0 feet.

	GAS RATE IN MM SCFD			
DEPTH (ft)	10.0	20.0	30.0	40.0
200.0	100.0	100.0	100.0	100.0
400.0	100.0	100.0	100.0	100.0
600.0	100.0	100.0	100.0	100.0
800.0	100.0	100.0	100.0	100.0
1000.0	100.0	100.0	100.0	100.0

COLLECTOR HEIGHT = 10.0 feet.

	GAS RATE IN MM SCFD			
DEPTH (ft)	10.0	20.0	30.0	40.0
200.0	99.5	98.0	95.6	92.6
400.0	100.0	99.9	99.8	99.4
600.0	100.0	100.0	100.0	99.9
800.0	100.0	100.0	100.0	100.0
1000.0	100.0	100.0	100.0	100.0

COLLECTOR HEIGHT = 15.0 feet.

	GAS RATE IN MM SCFD			
DEPTH (ft)	10.0	20.0	30.0	40.0
200.0	91.1	84.9	79.2	74.1
400.0	97.2	95.2	93.4	90.3
600.0	98.3	97.4	96.3	94.9
800.0	98.8	98.2	97.5	96.7
1000.0	99.0	98.6	98.1	97.6

COLLECTOR HEIGHT = 20.0 feet.

	GAS RATE IN MM SCFD			
DEPTH (ft)	10.0	20.0	30.0	40.0
200.0	78.0	70.5	64.5	59.4
400.0	88.2	84.4	81.4	77.0
600.0	91.0	88.7	86.3	83.8
800.0	92.4	90.7	88.9	87.1
1000.0	93.0	91.8	90.4	89.0

COLLECTOR HEIGHT = 25.0 feet.

	GAS RATE IN MM SCFD			
DEPTH (ft)	10.0	20.0	30.0	40.0
200.0	66.6	59.2	53.7	49.2
400.0	77.7	73.3	70.1	65.6
600.0	81.2	78.3	75.4	72.7
800.0	83.1	80.8	78.6	76.4
1000.0	84.0	82.2	80.5	78.7

C>

PERCENTAGE OIL COLLECTED FOR TWO 24" RISERS ON ONE COLLECTOR.

COLLECTOR HEIGHT = 5.0 feet.

	GAS RATE IN MM SCFD			
DEPTH (ft)	10.0	20.0	30.0	40.0
200.0	100.0	100.0	100.0	100.0
400.0	100.0	100.0	100.0	100.0
600.0	100.0	100.0	100.0	100.0
800.0	100.0	100.0	100.0	100.0
1000.0	100.0	100.0	100.0	100.0

COLLECTOR HEIGHT = 10.0 feet.

	GAS RATE IN MM SCFD			
DEPTH (ft)	10.0	20.0	30.0	40.0
200.0	100.0	99.9	99.5	98.9
400.0	100.0	100.0	100.0	100.0
600.0	100.0	100.0	100.0	100.0
800.0	100.0	100.0	100.0	100.0
1000.0	100.0	100.0	100.0	100.0

COLLECTOR HEIGHT = 15.0 feet.

	GAS RATE IN MM SCFD			
DEPTH (ft)	10.0	20.0	30.0	40.0
200.0	97.1	94.4	91.4	88.3
400.0	99.5	99.1	98.5	97.8
600.0	99.8	99.6	99.4	99.2
800.0	99.9	99.8	99.7	99.6
1000.0	99.9	99.9	99.8	99.7

COLLECTOR HEIGHT = 20.0 feet.

	GAS RATE IN MM SCFD			
DEPTH (ft)	10.0	20.0	30.0	40.0
200.0	87.9	83.0	78.5	74.5
400.0	95.1	93.4	91.5	89.6
600.0	96.7	95.8	94.8	93.7
800.0	97.4	96.8	96.1	95.4
1000.0	97.7	97.3	96.8	96.3

COLLECTOR HEIGHT = 25.0 feet.

	GAS RATE IN MM SCFD			
DEPTH (ft)	10.0	20.0	30.0	40.0
200.0	77.4	71.8	67.1	63.0
400.0	87.2	84.5	81.9	79.4
600.0	89.9	88.3	86.6	85.0
800.0	91.2	90.1	88.9	87.7
1000.0	91.9	91.1	90.2	89.2

C>

PERCENTAGE OIL COLLECTED FOR TWO 20" RISERS ON A DOUBLE COLLECTOR.

COLLECTOR HEIGHT = 5.0 feet.

	GAS RATE IN MM SCFD			
DEPTH (ft)	10.0	20.0	30.0	40.0
200.0	100.0	100.0	100.0	100.0
400.0	100.0	100.0	100.0	100.0
600.0	100.0	100.0	100.0	100.0
800.0	100.0	100.0	100.0	100.0
1000.0	100.0	100.0	100.0	100.0

COLLECTOR HEIGHT = 10.0 feet.

	GAS RATE IN MM SCFD			
DEPTH (ft)	10.0	20.0	30.0	40.0
200.0	99.9	99.6	99.0	98.1
400.0	100.0	100.0	100.0	99.9
600.0	100.0	100.0	100.0	100.0
800.0	100.0	100.0	100.0	100.0
1000.0	100.0	100.0	100.0	100.0

COLLECTOR HEIGHT = 15.0 feet.

	GAS RATE IN MM SCFD			
DEPTH (ft)	10.0	20.0	30.0	40.0
200.0	97.6	95.2	92.4	89.5
400.0	99.4	98.9	98.3	97.3
600.0	99.6	99.4	99.1	98.8
800.0	99.7	99.6	99.5	99.2
1000.0	99.8	99.7	99.6	99.5

COLLECTOR HEIGHT = 20.0 feet.

	GAS RATE IN MM SCFD			
DEPTH (ft)	10.0	20.0	30.0	40.0
200.0	91.7	87.1	82.8	78.7
400.0	96.5	94.9	93.5	91.2
600.0	97.6	96.7	95.7	94.7
800.0	98.0	97.5	96.8	96.1
1000.0	98.2	97.8	97.4	96.8

COLLECTOR HEIGHT = 25.0 feet.

	GAS RATE IN MM SCFD			
DEPTH (ft)	10.0	20.0	30.0	40.0
200.0	84.4	78.6	73.6	69.2
400.0	91.6	89.0	86.8	83.7
600.0	93.4	91.9	90.3	88.6
800.0	94.3	93.2	92.1	90.8
1000.0	94.7	93.9	93.1	92.1

C>
PERCENTAGE OIL COLLECTED FOR TWO 24" RISERS ON A DOUBLE COLLECTOR.

COLLECTOR HEIGHT = 5.0 feet.

	GAS RATE IN MM SCFD			
DEPTH (ft)	10.0	20.0	30.0	40.0
200.0	100.0	100.0	100.0	100.0
400.0	100.0	100.0	100.0	100.0
600.0	100.0	100.0	100.0	100.0
800.0	100.0	100.0	100.0	100.0
1000.0	100.0	100.0	100.0	100.0

COLLECTOR HEIGHT = 10.0 feet.

	GAS RATE IN MM SCFD			
DEPTH (ft)	10.0	20.0	30.0	40.0
200.0	100.0	100.0	99.9	99.8
400.0	100.0	100.0	100.0	100.0
600.0	100.0	100.0	100.0	100.0
800.0	100.0	100.0	100.0	100.0
1000.0	100.0	100.0	100.0	100.0

COLLECTOR HEIGHT = 15.0 feet.

	GAS RATE IN MM SCFD			
DEPTH (ft)	10.0	20.0	30.0	40.0
200.0	99.3	98.6	97.7	96.6
400.0	99.9	99.8	99.7	99.5
600.0	100.0	99.9	99.9	99.8
800.0	100.0	100.0	99.9	99.9
1000.0	100.0	100.0	100.0	99.9

COLLECTOR HEIGHT = 20.0 feet.

	GAS RATE IN MM SCFD			
DEPTH (ft)	10.0	20.0	30.0	40.0
200.0	96.4	94.3	92.0	89.7
400.0	98.8	98.3	97.7	97.0
600.0	99.3	99.0	98.7	98.4
800.0	99.4	99.3	99.1	98.9
1000.0	99.5	99.4	99.3	99.2

COLLECTOR HEIGHT = 25.0 feet.

	GAS RATE IN MM SCFD			
DEPTH (ft)	10.0	20.0	30.0	40.0
200.0	91.4	88.0	84.7	81.7
400.0	96.1	95.0	93.8	92.5
600.0	97.2	96.6	95.9	95.2
800.0	97.6	97.2	96.8	96.3
1000.0	97.9	97.6	97.3	96.9

LIQUID FLOW DATA FILES

RISER20.DAT

1.45 1.36 1.28 1.20
1.96 1.84 1.73 1.62
2.19 1.08 1.97 1.86
2.33 2.22 2.12 2.02
2.41 2.32 2.22 2.13

RISER24.DAT

2.21 2.13 2.05 1.97
3.07 2.95 2.83 2.71
3.46 3.34 3.23 3.11
3.69 3.58 3.47 3.39
3.84 3.74 3.64 3.54

TRISER20.DAT

3.00 2.90 2.81 2.72
4.04 3.92 3.90 3.68
4.49 4.38 4.27 4.16
4.77 4.66 4.55 4.44
4.91 4.82 4.73 4.64

TRISER24.DAT

4.50 4.42 4.34 4.26
6.26 6.14 6.02 5.90
7.04 6.92 6.80 6.68
7.49 7.38 7.27 7.16
7.78 7.68 7.58 7.48

```
      PROGRAM COLPERF
C     Single Collector Performance Prediction Program
      implicit real*4 (1)
      character fname*24,header*60
      dimension gf(10),wd(10),lf(10,10),gfd(10,10),lfd(10,10),ph(10),
     1 la(10,10),rp(10,10),ch(10),fr(5,10,10),p(5,10,10)
      pc(f,r) = 100.0*(1.-exp(-a*r*f/(b+r)))**c
      spd = 60.0*60.0*24.0
      m = 0
      cfpb = 40.0/7.5
      a = 59.69
      b = 6.991
      c=0.3726
      d=0.36
      e = 11.77
      g=32.2
      ro = 1.025 * 1.94
      ten = 0.0050
      ftpatm = 14.7*144.0/(ro*g)
      lb = sqrt(ten/(ro*g))
      write (*,'(a\)') ' Type name of riser flow data file '
      read (*,'(a)') fname
      write (*,'(a)') ' Type header for output '
      read(*,'(a)') header
      write(*,'(a,a)') ' PERCENTAGE OIL COLLECTED',header
      write (*,'(a)') ' '
      open (2, file=fname, status='old')
      open (9,file='lpt1:')
      do 5 j=1,4
5     gf(j) = 10.0 * j
      do 10 i = 1,5
      wd(i) = 200.0 * i
      ph(i) = (wd(i)/ftpatm) + 1.0
      read (2,*)(lf(i,j), j=1,4)
      do 10 j = 1,4
      gfd(i,j) = (gf(j)/(ph(i))) * 1000000.0/spd
      lfd(i,j) = 1000000.0 * cfpb * lf(i,j) /spd
      la(i,j) = (gfd(i,j)**0.4)/(g**0.2)
10    rp(i,j) = (lfd(i,j)/gfd(i,j)) * (1.0 + e*lb/la(i,j))
      do 20 k = 1,5
      ch(k) = 5.*k
      write (m,60) ch(k)
60    format(' COLLECTOR HEIGHT =',f6.1,' feet.')
      write (m,70) (gf(j),j=1,4)
70    format(/,' ',25x,'GAS RATE IN MM SCFD',/' DEPTH (ft)',8x,
     1 4(f5.1,7x),/' ')
      do 30 i = 1,5
      do 40 j = 1,4
      fr(k,i,j) = lfd(i,j)/sqrt(g*(ch(k) - d)**5)
40    p(k,i,j) = pc(fr(k,i,j),rp(i,j))
30    write (m,80) wd(i),(p(k,i,j),j=1,4)
20    write (m,90)
80    format(' ',f7.1,4x,4f12.1)
90    format(/,' ')
      end
```

```
      PROGRAM DCOLPERF
c     Double Collector Performance Prediction
      implicit real*4 (1)
      character fname*24,header*60
      dimension gf(10),wd(10),lf(10,10),gfd(10,10),lfd(10,10),ph(10),
     1 la(10,10),rp(10,10),ch(10),fr(5,10,10),p(5,10,10)
      pc(f,r) = 100.0*(1.-exp(-a*r*f/(b+r)))**c
      spd = 60.0*60.0*24.0
      m = 0
      cfpb = 40.0/7.5
      a = 59.69
      b = 6.991
      c=0.3726
      d=0.36
      e = 11.77
      g=32.2
      ro = 1.025 * 1.94
      ten = 0.0050
      ftpatm = 14.7*144.0/(ro*g)
      lb = sqrt(ten/(ro*g))
      write (*,'(a\)') ' Type name of riser flow data file '
      read (*,'(a)') fname
      write (*,'(a)') ' Type header for output '
      read(*,'(a)') header
      write(*,'(a,a)') ' PERCENTAGE OIL COLLECTED',header
      write (*,'(a)') ' '
      open (2, file=fname, status='old')
      open (9,file='lpt1:')
      do 5 j=1,4
5     gf(j) = 10.0 * j
      do 10 i = 1,5
      wd(i) = 200.0 * i
      ph(i) = (wd(i)/ftpatm) + 1.0
      read (2,*)(lf(i,j), j=1,4)
      do 10 j = 1,4
      gfd(i,j) = (gf(j)/(ph(i))) * 1000000.0/spd
      lfd(i,j) = 1000000.0 * cfpb * lf(i,j) /spd
      la(i,j) = (gfd(i,j)**0.4)/(g**0.2)
10    rp(i,j) = (lfd(i,j)/gfd(i,j)) * (1.0 + e*lb/la(i,j))
      do 20 k = 1,5
      ch(k) = 5.*k
      write (m,60) ch(k)
60    format(' COLLECTOR HEIGHT =',f6.1,' feet.')
      write (m,70) (gf(j),j=1,4)
70    format(/,' ',25x,'GAS RATE IN MM SCFD',/' DEPTH (ft)',8x,
     1 4(f5.1,7x),/' ')
      do 30 i = 1,5
      do 40 j = 1,4
      fr(k,i,j) = lfd(i,j)/sqrt(g*(ch(k) - d)**5)
      p(k,i,j) = pc(fr(k,i,j),rp(i,j))
      frc = p(k,i,j)/100.0
      p(k,i,j) = 100.*(1.8*frc-0.8*frc*frc)
40    if (p(k,i,j) .gt.100.0) p(k,i,j) = 100.000
30    write (m,80) wd(i),(p(k,i,j),j=1,4)
20    write (m,90)
80    format(' ',f7.1,4x,4f12.1)
90    format(/,' ')
      end
```

Brown & Root Development, Inc. P.O. Box 1051, Houston, Texas 77251

BARDI

Letter No: P/021

July 15, 1985

Marine Professional Services, Inc.
322 Ridge Street
Arlington, Massachusetts 02174

ATTN: Dr. J.H. Milgram

SUBJ: MMS Ship Mounted Subsurface Collector System Study - Consulting Services
BARDI Project No. XC-0030

Dear Dr. Milgram:

In response to your verbal discussions during the past several weeks with our Mr. Jimmy May regarding the liquid flow rates expressed in our letter of June 12, 1985, given below are the revised rates based upon more detailed consideration of riser entrance and exit losses.

TABLE 1 - 20-Inch Riser

	Gas Rate			
Water Depth	10MMSCFD	20MMSCFD	30MMSCFD	40MMSCFD
200 FT	1.45	1.36	1.28	1.20
400 FT	1.96	1.84	1.73	1.62
600 FT	2.19	2.08	1.97	1.86
800 FT	2.33	2.22	2.12	2.02
1,000 FT	2.41	2.32	2.22	2.13

TABLE 2 - 24-Inch Riser

	Gas Rate			
Water Depth	10MMSCFD	20MMSCFD	30MMSCFD	40MMSCFD
200 FT	2.21	2.13	2.05	1.97
400 FT	3.07	2.95	2.83	2.71
600 FT	3.46	3.34	3.23	3.11
800 FT	3.69	3.58	3.47	3.39
1,000 FT	3.84	3.74	3.64	3.54

We trust that the above results will assist you in the timely completion of your work. Should you have any further questions please do not hesitate to contact Mr. Jimmy May.

Please be advised that Mr. May and myself are available to meet with you on either July 26 or 27 and discuss the complete results of your efforts. I will be contacting you in the next couple of days to confirm day and time for this meeting.

Very truly yours,

BROWN & ROOT DEVELOPMENT, INC.

E. Earl Peebles
Program Manager

EEP/kf

cc: Mr. Edward Tennyson (MMS)
H.T. Djie
J.D. May

MARINE PROFESSIONAL SERVICES, INC.
322 RIDGE STREET
ARLINGTON, MA 02174

July 32, 1985

Mr. Earl Peebles
Brown and Root Development, Inc.
P.O. Box 1051
Houston, Texas 77251

Dear Mr. Peebles:

It was good to meet with you and Jim May yesterday. At the meeting I was asked to look into the high modified Froude Numbers in the tables in the Part II collector paper. In going through the original data, I have found that the correct value for the D parameter is 0.111 feet which is 0.0338 meters. All the analysis was done in english units. However, since the journal in which the paper was published uses metric units, the data was converted to metric units for publication. D was erroneously reported in the published paper as 0.111 m instead of 0.111 ft. (0.038m). The computations of the modified Froude number (F') are indeed correct. The issue is entirely moot however because for the large Froude numbers predicted collection is 100% for any reasonable phase ratio.

My bill for work done to date is enclosed. As I told you, I had spent 24 hours and it took another two hours to look into the original data.

Sincerely yours,

Jerome H. Milgram

P.S. I have not yet located the data for the collector pressure measurements made in the Gulf of Mexico in 1979. As an aid in this, please ask the MMS people for a copy of the first report I made to them in 1979 or 1980. We will continue to look too.

MARINE PROFESSIONAL SERVICES, INC.
322 RIDGE STREET
ARLINGTON, MA 02174

7-31-85

Answers to Important Questions Raised by Brown and Root Development, Inc.

Q. Should a double collector or a single collector be used?
A. If the performance requirements can be met with a system having only one riser, only a single collector can be supported and the simplicity gained by having only one riser should be retained.
If more than one riser is required to meet the performance requirements, a double collector should certainly be used.

Q. What is the recommended radius of the collector?
A. Roughly 1.5 times the positional inaccuracy in locating the collector over the blowout point. Similarly, if the blowout is distributed, the collector diameter should be roughly 1.5 times the diameter of the circle that circumscribes the blowout.

Q. What is the recommended depth of the inner collector?
A. We have little basis for providing an exact number. However, the physical phenomenon we want to achieve is complete choking of the inner collector when excessively large gas flow rates are encountered. Qualitatively (based on the consideration that the Bugg Spring Model was intended to be One-quarter scale), we feel the inner collector should have a height of about 12 feet although anything between 8 and 20 feet can be expected to work. The outer collector should extend deeper than the inner collector so it captures nearly all the gas that escapes from the inner collector.

Q. What is the most important area for further study?
A. Since flexible risers are being proposed and since the Trondheim Group found such severe problems with model flexible risers, the most important area for future experiments is a test with flexible risers modeled on the proposed ones. A retest with the Bugg Spring apparatus, but with flexible risers seems most appropriate. The mechanical riser properties which influence vibration, fatigue and buckling need to be properly scaled. The scale ratio should be determined by finding the length scale ratio between the proposed full scale design and the Bugg Spring collector. Then a scaled flexible riser system can be designed and tested. This is deemed to be particularly important since a riser failure would make the collection system completly imoperable.

Tab

Appendix 3

APPENDIX 3.0

PATENTS AND STUDIES

Dec. 23, 1924. 1,520,288

P. P. FEATHERSTONE

FIRE EXTINGUISHER

Filed Nov. 21, 1923 2 Sheets-Sheet 1

Fig. 1.

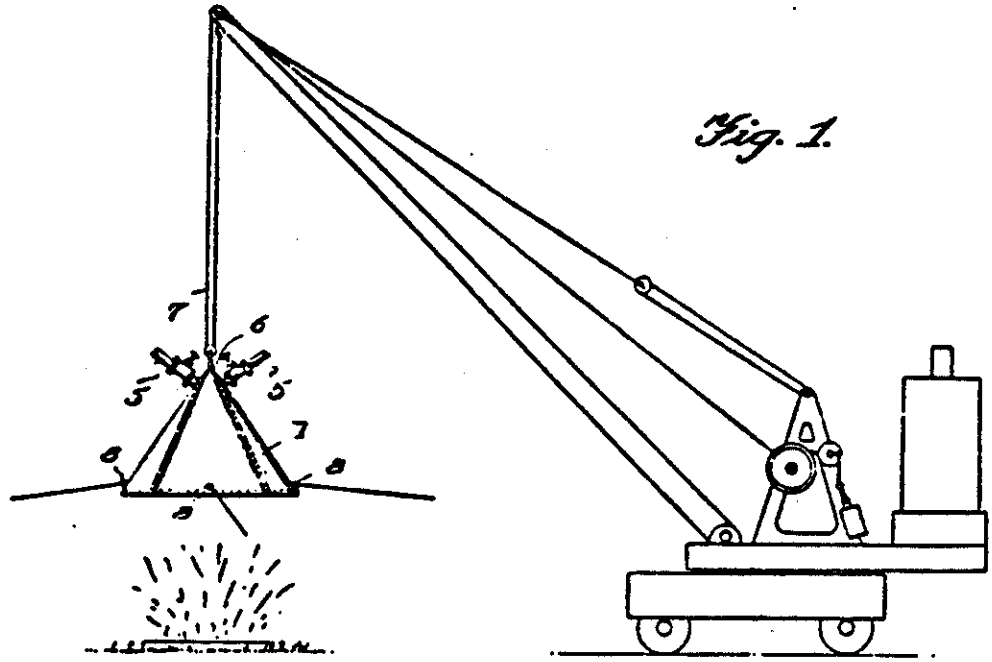

Fig. 2.

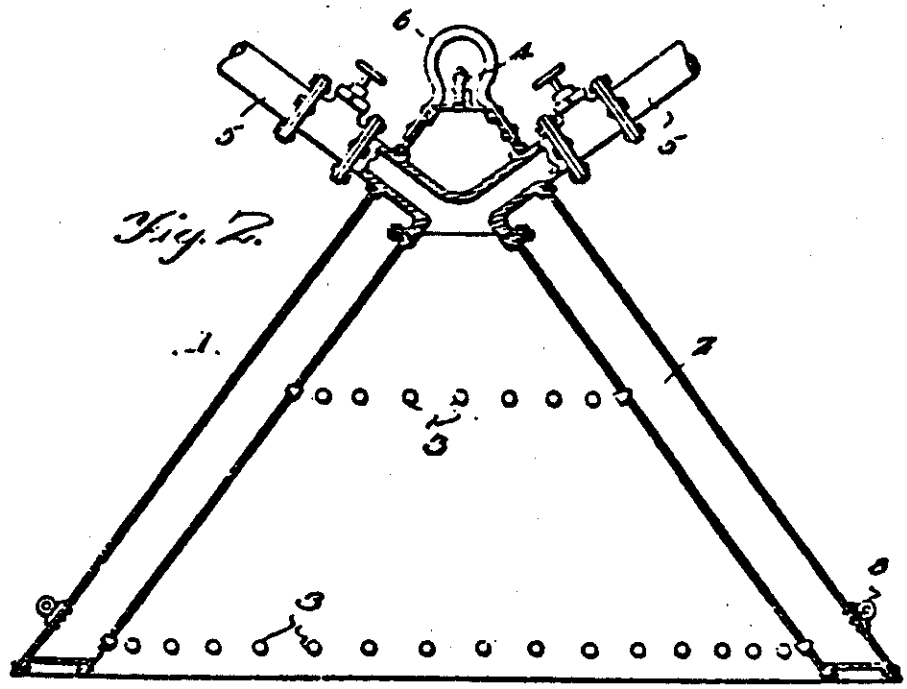

P. P. Featherstone
INVENTOR

Victor J. Evans
ATTORNEY

WITNESS:

Sept. 5, 1967 G. SIEGEL 3,339,512

MULTIPLE STORAGE AND REDISTRIBUTION FACILITY

Filed June 17, 1966

FIG. 1

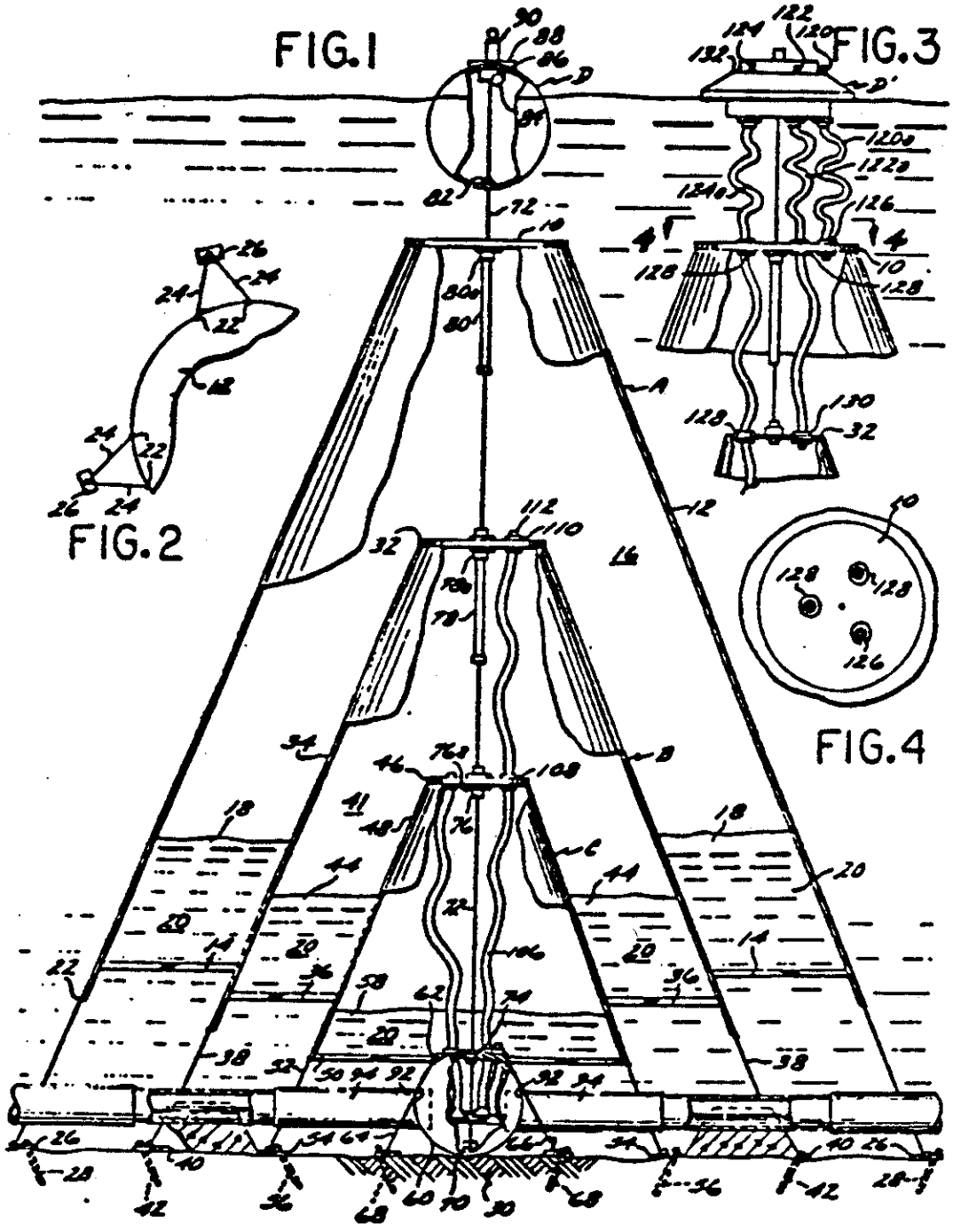

FIG. 2

FIG. 3

FIG. 4

INVENTOR
GILBERT SIEGEL

BY
William C. Babcock

ATTORNEY

PATENTED JAN 12 1971

3,554,290

SHEET 2 OF 2

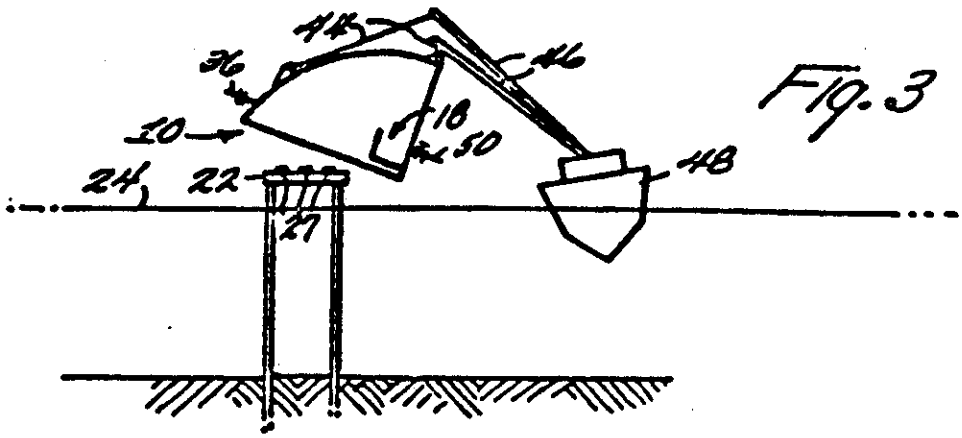

Fig. 3

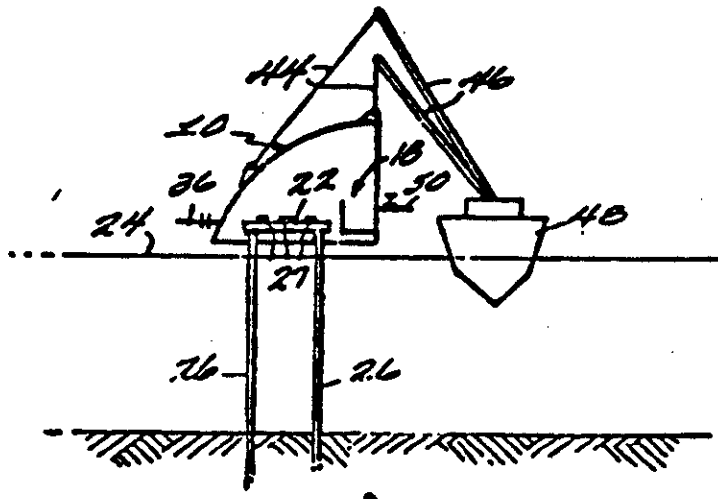

Fig. 4

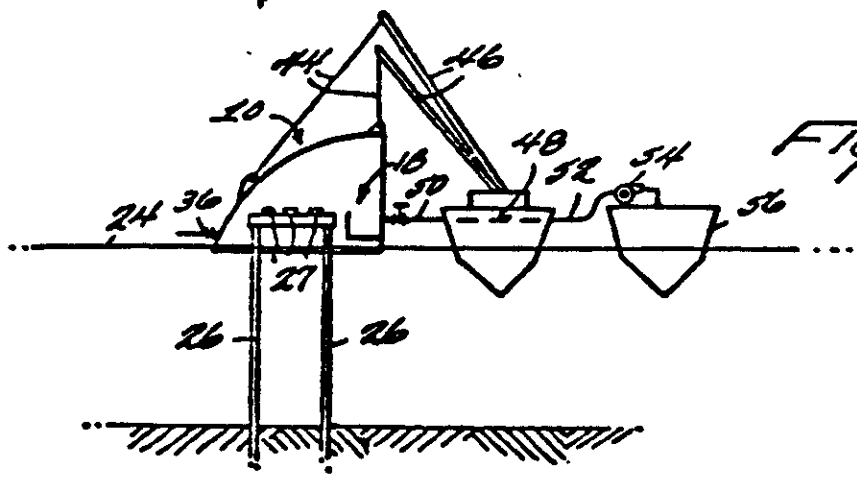

Fig. 5

INVENTOR
SAM M. VERDIN

BY
Cushman, Darby & Cushman
ATTORNEYS

PATENTED JAN 12 1971

3,554,290

SHEET 1 OF 2

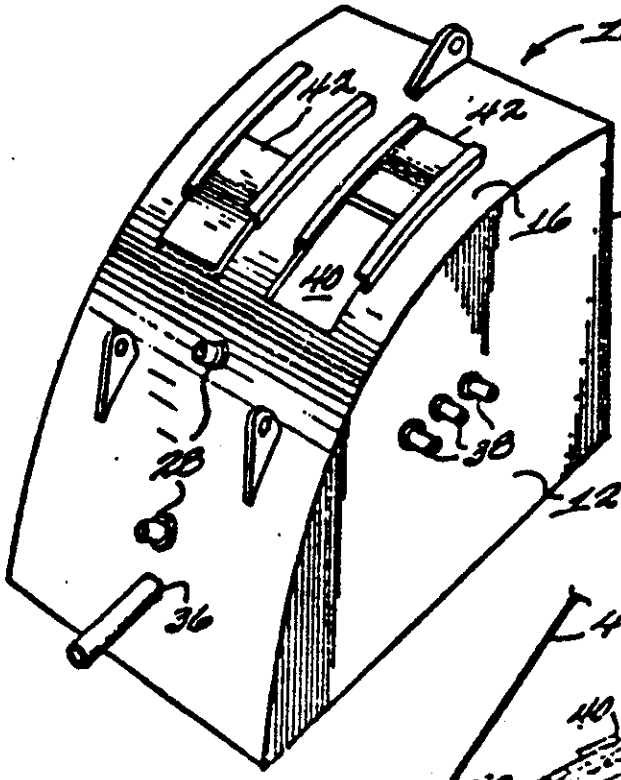

FIG. 1

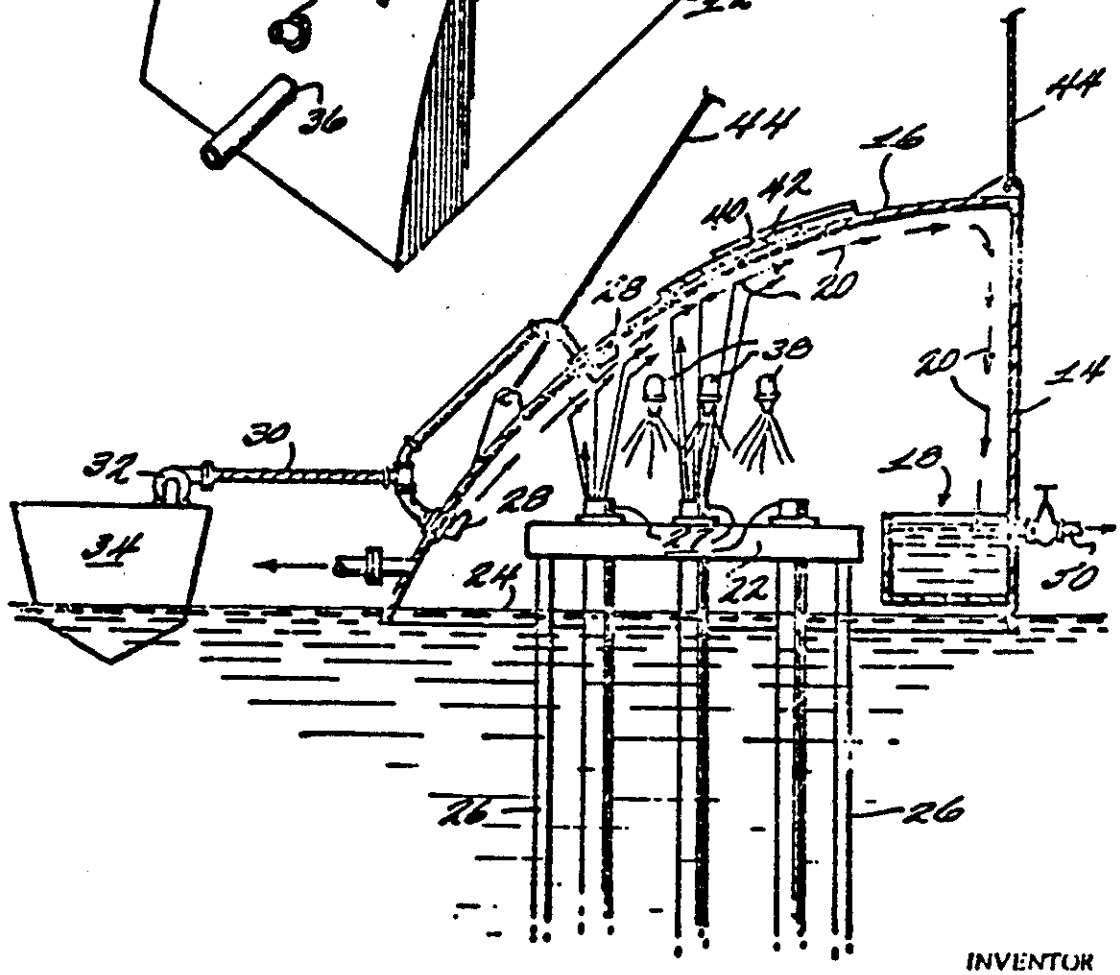

FIG. 2

INVENTOR

SAM M. VERDIN

BY

ATTORNEYS

March 17, 1970 C. F. LOGAN 3,500,841

FLUID RECOVERY SYSTEM AND METHOD

Filed Aug. 1, 1968

FIG. 1

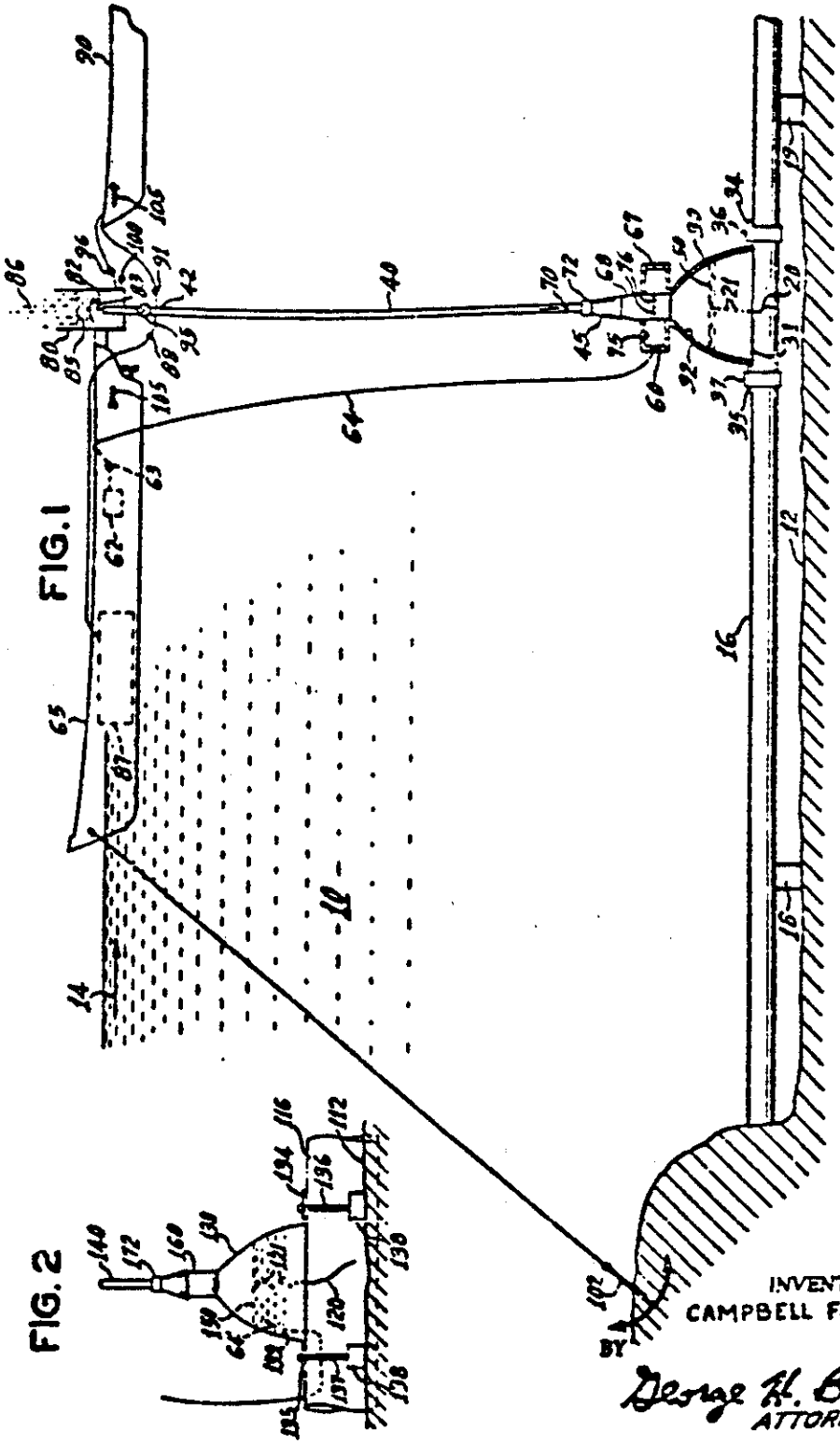

FIG. 2

INVENTOR
CAMPBELL F. LOGAN

George H. Baldwin
ATTORNEY

PATENTED JUN 6 1972

3,667,605

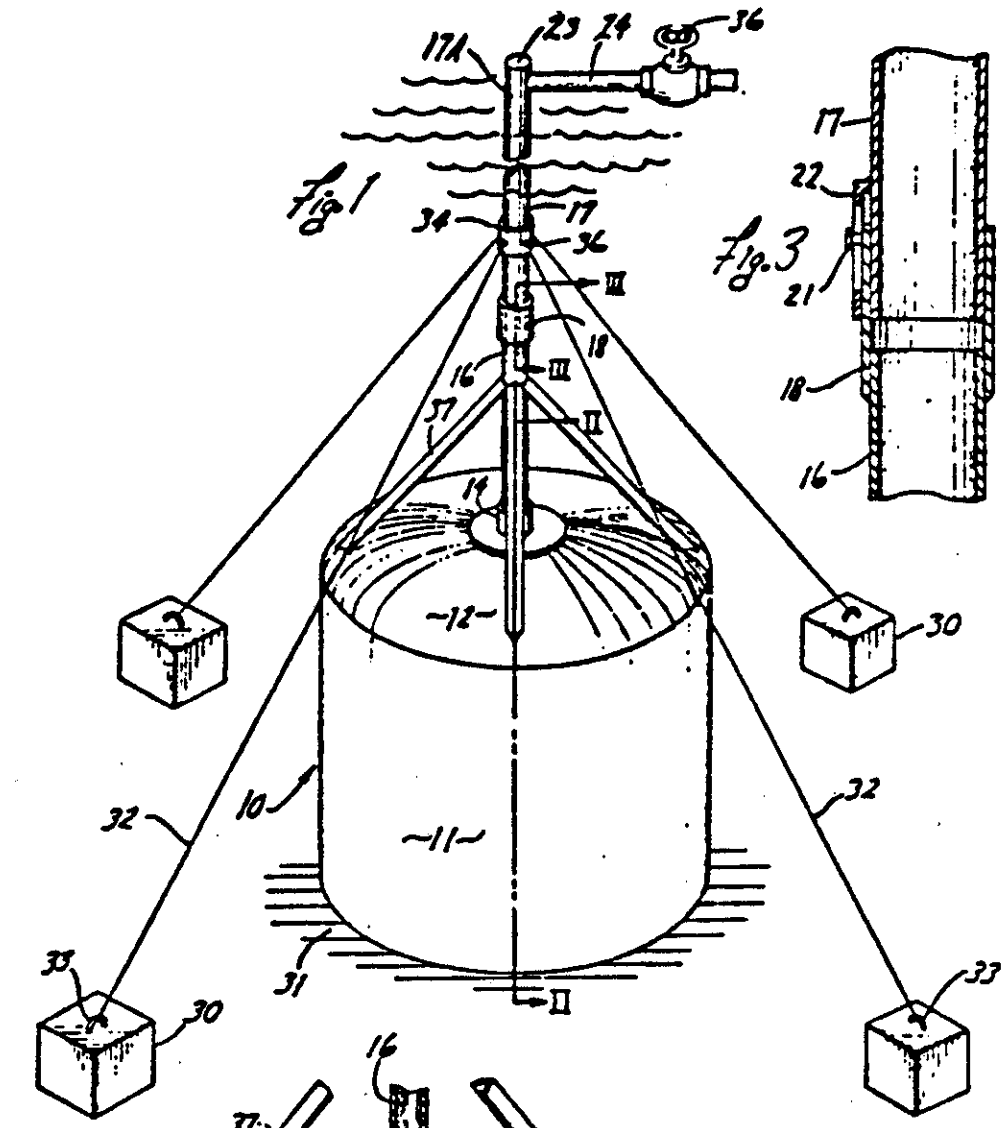

Fig. 1

Fig. 3

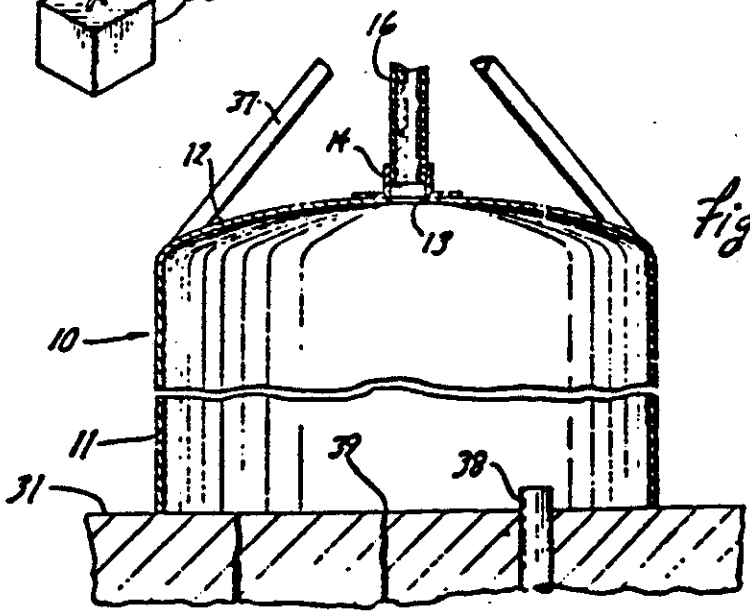

Fig. 2

INVENTOR
ROBERT O. ZIELINSKI
BY
ATTORNEYS

PATENTED JUN 20 1972

3,670,814

SHEET 1 OF 5

FIG. 1.

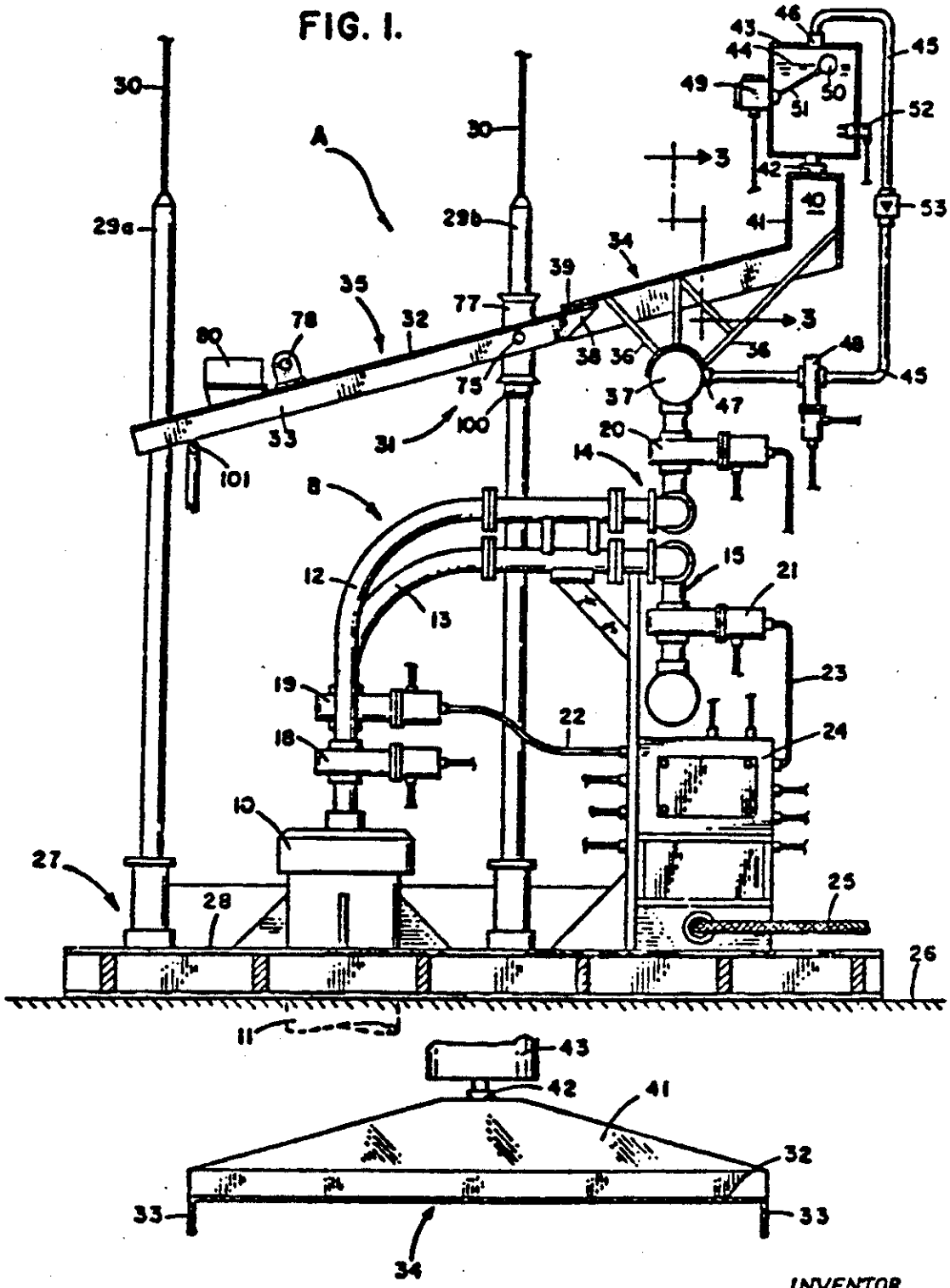

FIG. 3.

INVENTOR.
THOMAS W. CHILDERS,
BY
Timothy L. Burgess
ATTORNEY.

PATENTED AUG 8 1972

3,681,923

SHEET 1 OF 2

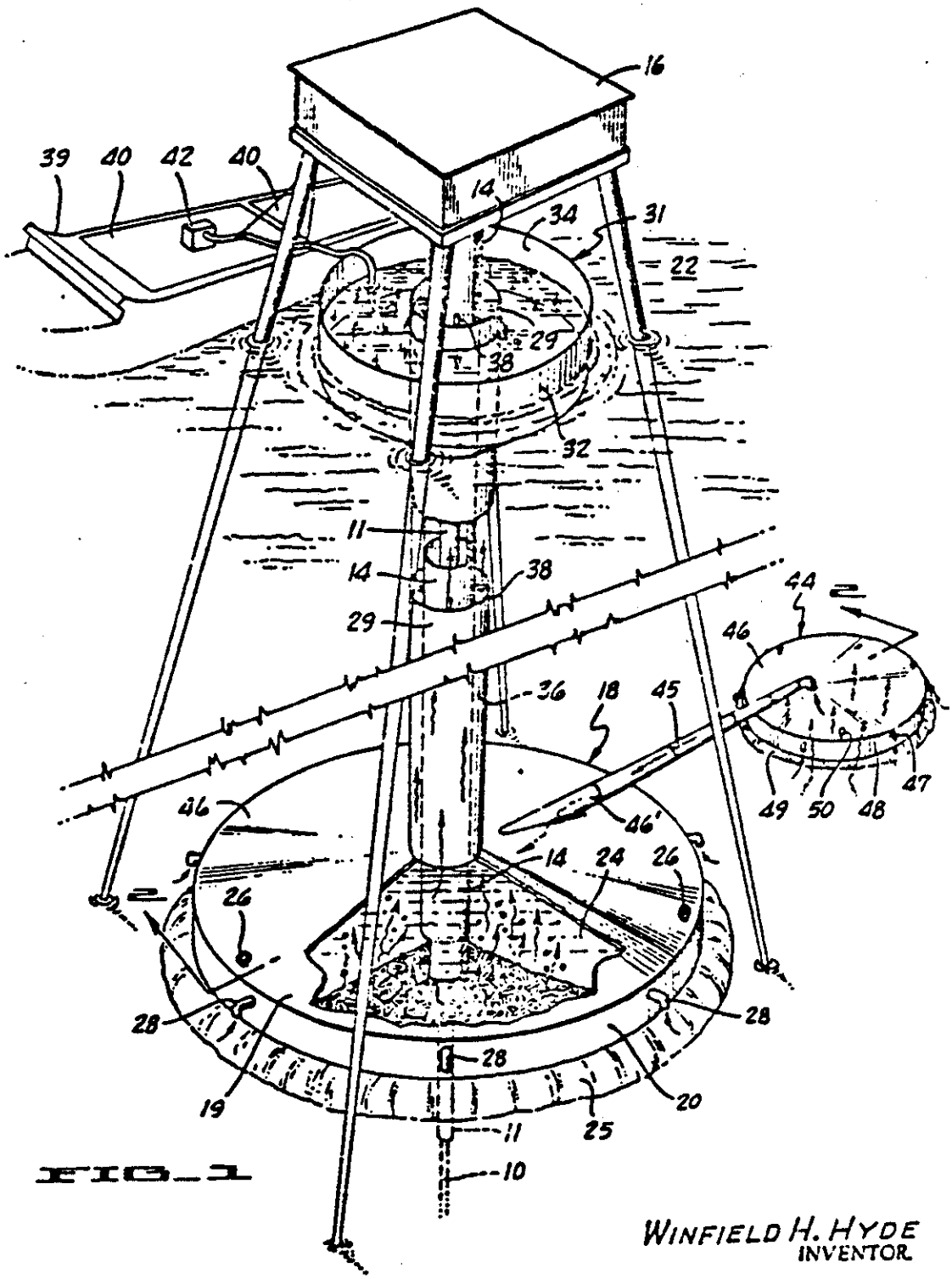

FIG. 1

WINFIELD H. HYDE
INVENTOR

BY Gardner & Zimmerman
ATTORNEYS

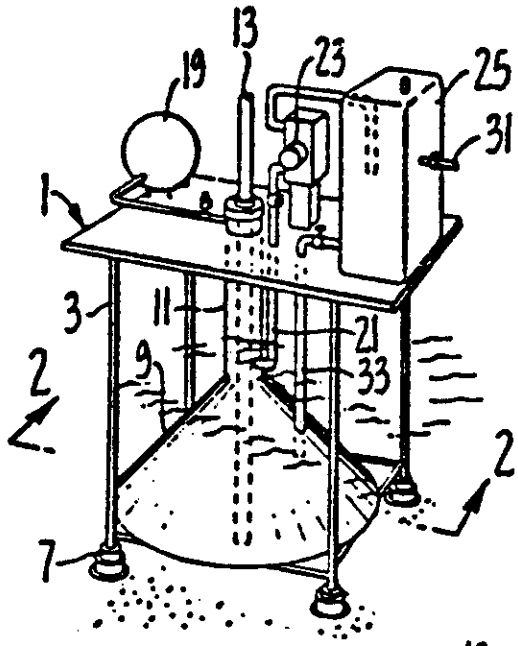
13
19
23
25
31
1
3
11
21
9
33
2
2
7

FIG. 1.

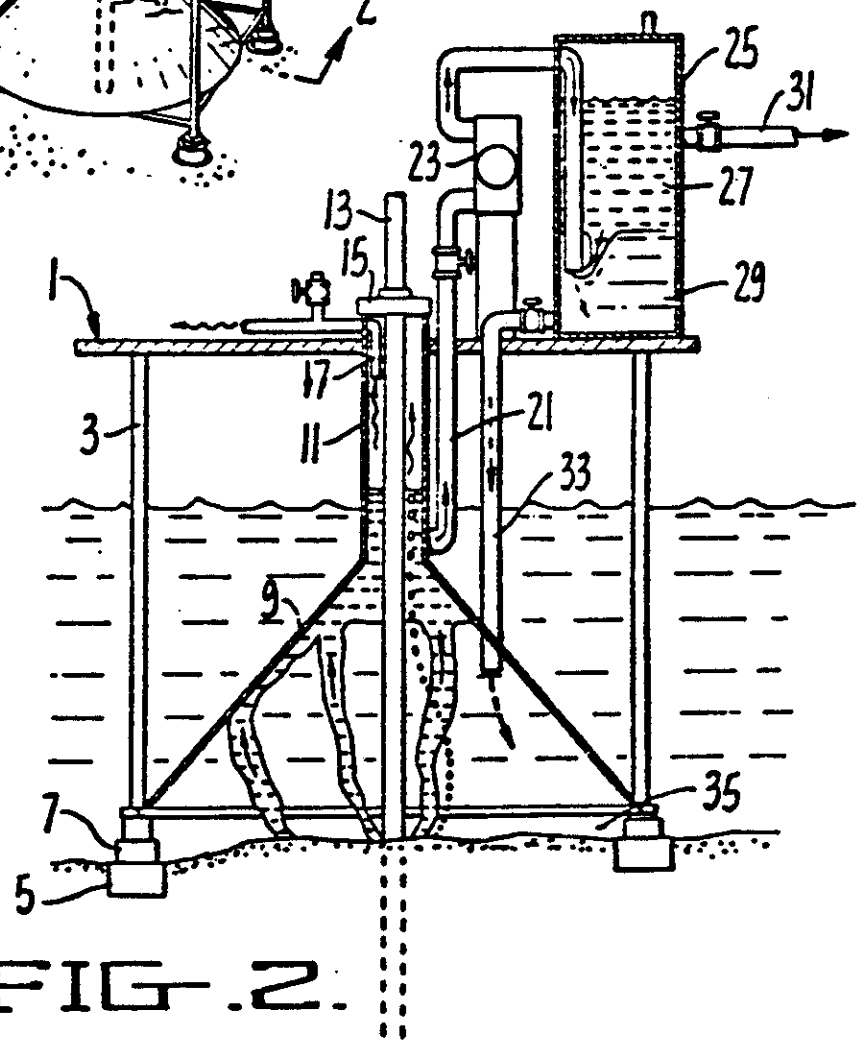
25
31
23
27
13
15
29
1
17
3
11
21
33
9
7
35
5

FIG. 2.

120

Appendix 4

APPENDIX 4.0
VENDOR LITERATURE

NOTICE

Vendor literature contained within this Appendix 4.0 or any reference within this report to a particular equipment make, model, manufacturer or supplier does not represent an endorsement of that product by the United States Department of the Interior or any other branch or agency of the United States Government. The sole purpose for its inclusion in this report is to document the extent of present technology.

971L2

Model 971 COLOUR Sonar

No Other Sonar Comes Close

Model 971 COLOUR Imaging Sonar

1. Boatsheds opposite Mesotech's floating laboratory. Note rows of pilings, and grouped pilings/floating log booms dividing channel.

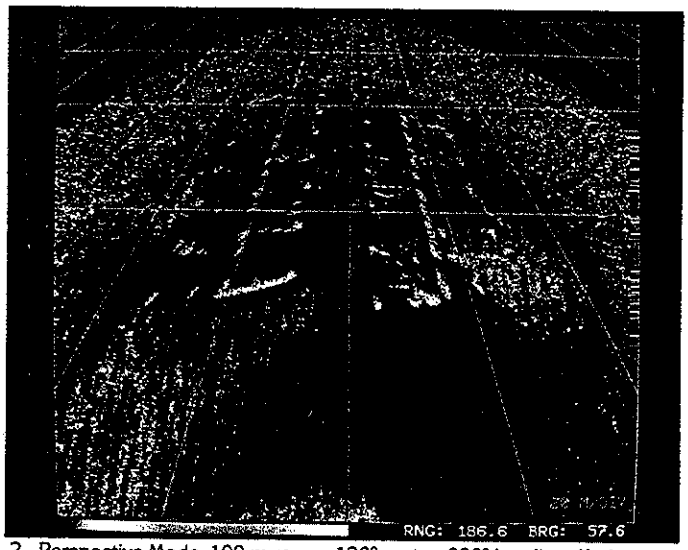

2. Perspective Mode, 100 m range, 120° sector, 000° heading. Underwater equivalent of Photo 1. Note returns off pilings and log booms. This unique mode is ideal for pilotage and has an arresting realism.

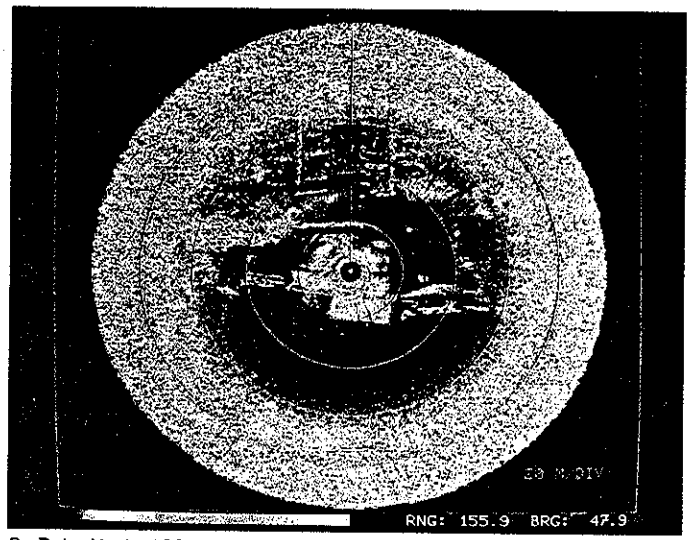

3. Polar Mode, 100 m range. Effectively a plan view of the boatsheds and the surrounding area. Equivalent to a radar P.P.I. display, this is the General Surveillance Site Clearance and General Search mode.

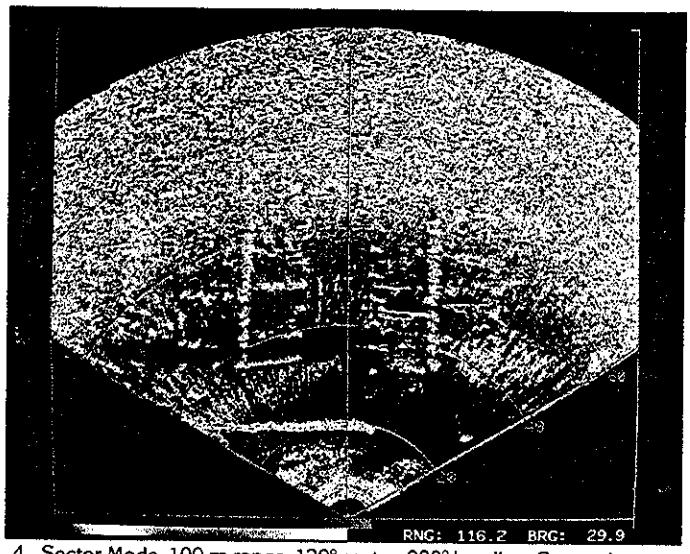

4. Sector Mode, 100 m range, 120° sector, 000° heading. Covers the same area as Photo 2 and provides a x2 linear magnification relative to the Polar Mode. This mode is good for controlling engineering, and directed searches.

9. You have precise control with the Model 971-2 Sonar Processor ➟
The precision of ¼ **million pixels** and **128 colours**, the control of **five scan/display modes**, speed/resolution, heading . . .
Imagine these pictures magnified x3 (same as the front cover) and as bright as a precision CRT. . .

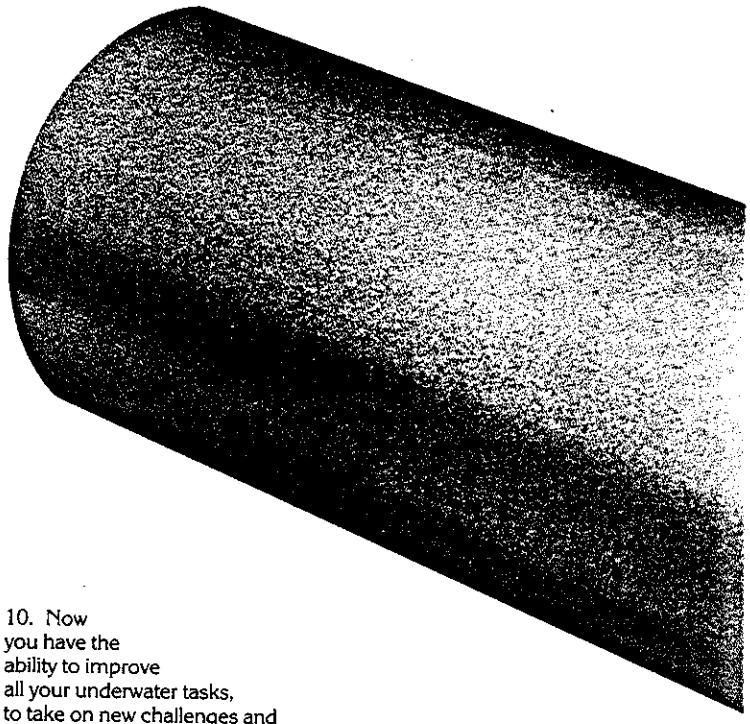

10. Now you have the ability to improve all your underwater tasks, to take on new challenges and to rapidly **improve your profitability.**
You may deploy the Model 971-1 Sonar Head on or through drill strings, casings, sea-chests, or over the side, or on any rig, ROV, ADS, bell, or towed body. Mount it on trenching ploughs, cable-layers, or any load to be precisely emplaced. A sample of possible uses of 971 includes:

- "Visual" Nav. & Pilotage
- Diver/Vehicle Monitor
- Erosion/Scour Surveys
- Engineering Direction
- Tailing/Plume Studies
- Obstacle Avoidance
- Route/Site Surveys
- Platform Inspection
- General Surveillance
- Template Positioning
- Anode Surveys
- Wreck Location
- Object Recovery
- Trench Profiling
- Clearance Surveys

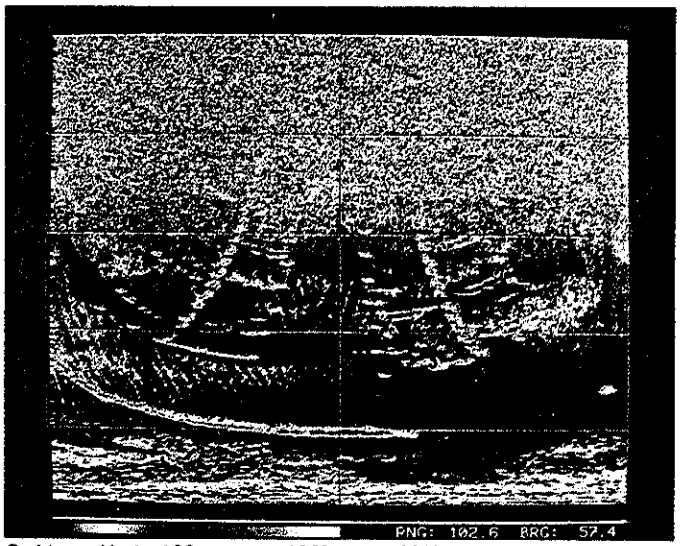

5. Linear Mode, 100 m range, 120° sector, 000° heading. The sector origin and range rings become straight lines, expanding the area at the origin.

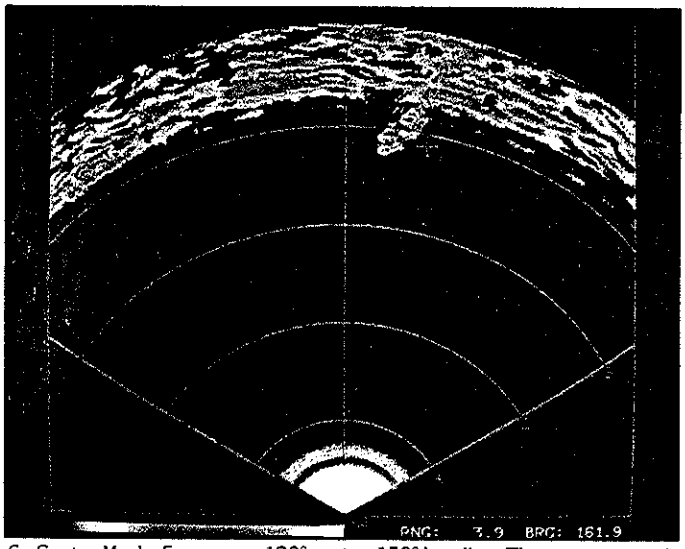

6. Sector Mode, 5 m range, 120° sector, 150° heading. The range **cursor** is adjacent to a target group of pilings. Note the digital readout of range and bearing co-ordinates to the **cursor**.

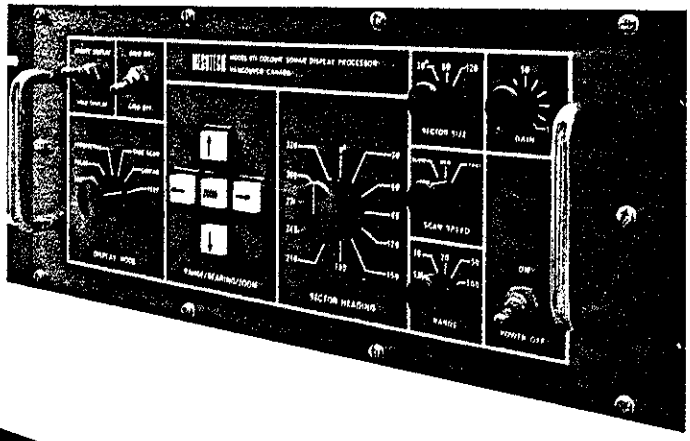

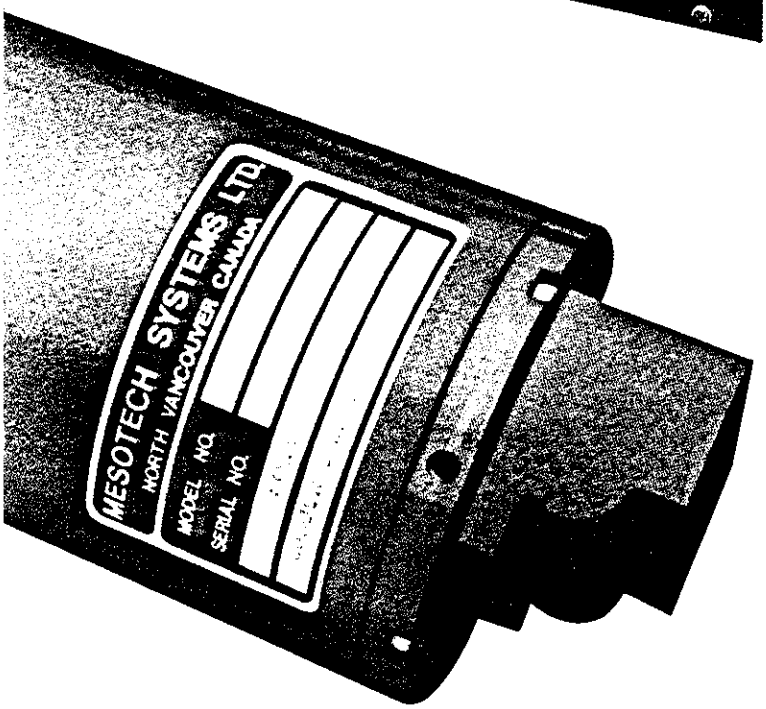

10. Model 971-1 sonar Head, about ¾ life size, fits any vehicle and in any orientation.

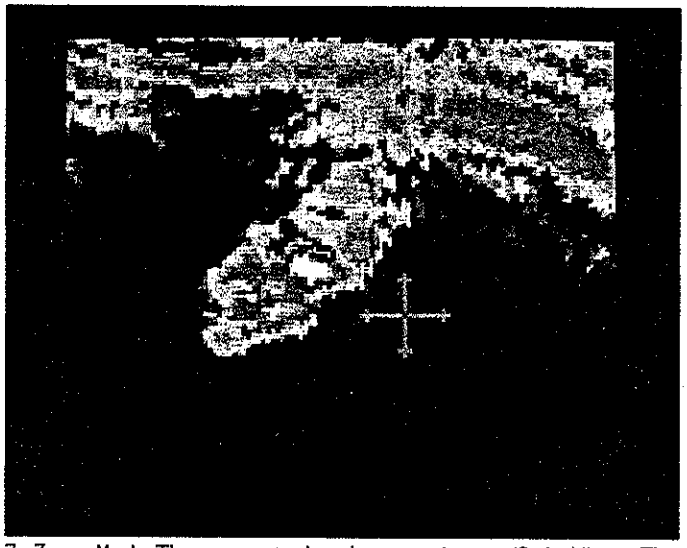

7. Zoom Mode. The area centred on the **cursor** is magnified x4 linear. The image may be moved to align a single 'target' pixel with the centre of the **cursor**.

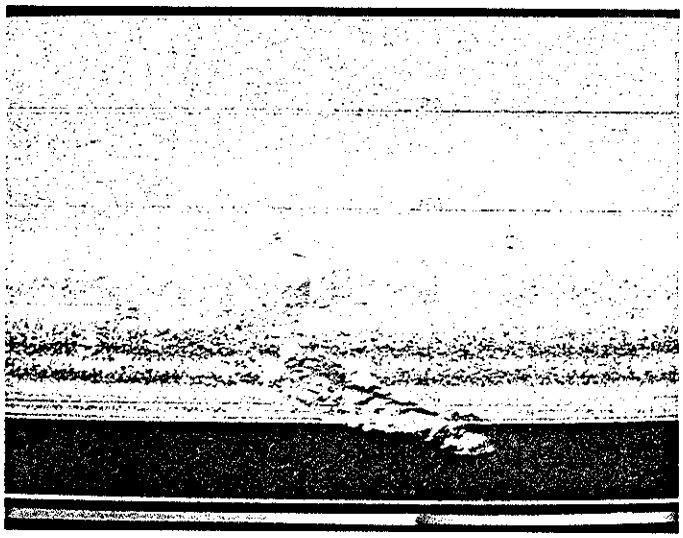

8. Side Scan Mode, 100 m range. Wrecked mine sweeper in about 17 m deep water. See also full size example of 13" monitor display on front cover. This mode is used for route surveys and large area searches.

Colour Imaging Sonar

SONAR

Model 971

- Light weight miniature head
- Fits any vehicle or rig
- Mounts in any orientation

Model 971-1 Sonar Head.
Frequency: 675 kHz.
Beamwidth: 1.7° horizontal, 60° vertical.
Mechanical Resolution: 0.225° (step angle).
Scanning: 360° continuous, or locked.
Power Supply: 22-26 Vdc at 1 A max.
Connector: Glenair GL 30G 4P-BC. 4 pin.
Cable: 4000 m (13000 ft) max. length.
Construction: Aluminum alloy 6061-T6.
300 Series stainless steel rigid PVC, polyacetal, epoxy
Finish: Hard anodise, red.
Temperature: Operating −10°C to +40°C.
Storage – 50°C to +50°C.
Depth: 1000 m (3300 ft) max. working.
Dimensions: 89 mm (3.5 in) diameter.
372 mm (14.64 in) long.
Weight: In air 3.6 kg (8 lb).
In water 1.4 kg (3 lb).

Model 971-1 Sonar Head

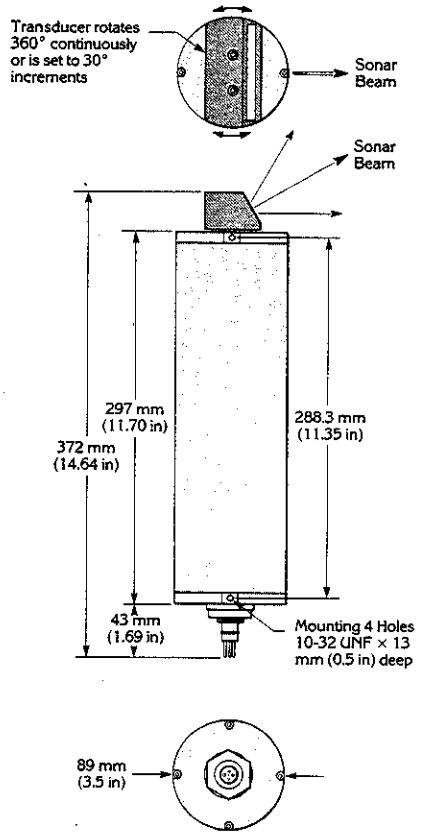

- Compact processor/controller
- Comprehensive modes
- Simple, logical controls

Model 971-2 Sonar Processor
Display Modes: Sector, Polar, Perspective, Side-scan Linear, (and Test)
Ranges: 0-5, 10, 20, 50, 100 m.
Scanning Arcs: 360° continuous, or 30°, 60°, 120° sector.
Sector Centre: 0°, 30°, 60°, 90°, 120°, 150°, 180°, 210°, 240°, 270°, 300°, 330°.
Scanning Speed: Slow-1 shot per step
Medium-1 shot per 2 steps
Fast-1 shot per 4 steps
Side Scan: Transducer may be locked at any of the above sector centres.
Data Resolution: 512 x 512 x 128 levels (colours).
Timing Resolution: ±16 μs [≡ ±12mm(±0.5 in)].
Video Output: RGB with composite sync. on all channels. Analogue IV p-p into 75 Ω.

Cursor Control: Moveable to any point on display
Readout: Range and Bearing to cursor are displayed on screen.
Zoom: Area centred on the cursor is magnified x4 linear.
Data Input: RS-232-C for user labels date, time (to be written on screen).
Data Output: RS-232-C status & errors
Temperature: Operating −5°C to +40°C.
Storage −20°C to +60°C.
Power Supply: 120/240 V, 60/50 Hz,2/1 A.
Dimensions: 483 mm (19 in) wide x 178 mm (7 in) high x 432 mm (17 in) deep.
Weight: 14 kg (31 lb).

A Colour Imaging Sonar System
A **Model 971 System** comprises one each:
Model 971-1 Sonar Head, Model 971-2 Sonar Processor and Model 971-3 Sonar Display.
The **Sonar Head** is an O-ring sealed pressure-proof aluminum cylinder, with a transmit-receive transducer at one end and a power/control/data connector at the other end. Inside are telemetry, microprocessor, transmitter, receiver, motor and power circuits.
The **Sonar Processor** is a welded aluminum box, black and anodised, with white lettering. It controls all data aquisition modes, processes the telemetered data, and outputs 525 line (NTSC) or 625 line (PAL) RGB video.
The **Sonar Display** is a very high resolution monitor with direct input to the Red, Green and Blue electron guns of the CRT (hence RGB). With an appropriate adaptor (NTSC or PAL) signals may be stored on a video recorder.

- Very high resolution monitor
- Direct RGB input
- ¼ million pixel display

Model 971-2 Sonar Processor

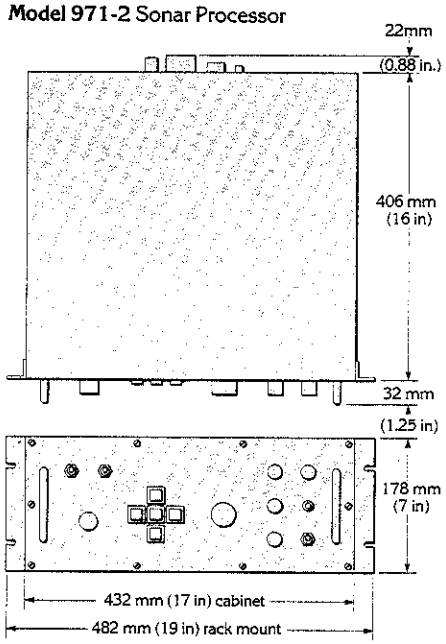

Model 971-3 Sonar Display
Screen Size: 330 mm (13 in) diagonal
Signal: RGB from Model 971-2
Input: 3 x BNC, 75 Ω or high Z (loop through)
Raster: 525 lines interlaced, 15,750 Hz or 625 lines interlaced, 15,625 Hz.
Temperature: Operating −5°C to +40°C.
Storage −20°C to +60°C.
Power: 120/240 V, 60/50 Hz, 2/1A.
Dimensions: 374 mm (14.7 in) wide x 351 mm (13.8 in) high x 409 mm (16.1) deep.
Weight: 18 kg (40 lb).

Ordering Information
Model 971-1 Sonar Head
Model 971-2 Sonar Processor
Model 971-3 Sonar Display

Standard Accessories for:
971-1: Glenair GL20G 4S-D dummy, (fitted).
Glenair GL20G 4S-F3 underwater connector with 1m (3ft) tail.
Glenair GL20G 402 locking sleeve.
971-2: Power Cable MS to US 3 pin, or tail.
Signal Cable MS to tail.
Output Cables 3 x BNC male to BNC male.
I/O Cable MS to D type.
971-3: Power Cable
System: Operator's manual
Service Manual

*Note: Specifications subject to change without notice.

MESOTECH

MESOTECH SYSTEMS LTD. 2830 Huntington Pl. Port Coquitlam. B.C., Canada V3C 4T3
Telephone: (604) 464-8144 Telex: 04-353637

MESOTECH

Model 971 Option 3 produces high resolution images and precise profiles of the underwater terrain and objects. Images (see brochure 971L2) are produced by the fan shaped beam, profiles by the pencil slim cone shaped beam. The transducer rotates in small steps of known angle, transmitting and receiving a sound pulse at each step. The slant range (time) and intensity of each returned signal are recorded. Intensities are digitised to 128 levels (discrete colours) and displayed on the screen. Each return is plotted at its scale range and true angle. In the profiling mode, a white dot is plotted for the first significant return.

800 such measurements produced this profile of the bottom at Mesotech's floating laboratory; the column at the left is a piling. Similar vertical profiles show the true shape and accurate dimensions of trenches, pipelines, scour effects, etc. Horizontal profiles show cross-sections of pilings (see over), drill rigs, flooded mine-shafts etc.

The sonar is fully controllable via the RS-232-C port, which also outputs the profile data for hard copy plotting or further processing.

Actual Size Image

330 mm (13 in.) Monitor

Model 971 COLOUR Sonar

Profiling and Compass Options

No Other Sonar Comes Close

Colour Imaging Sonar

Model 971 Opt. 3 Imaging/Profiling. Opt. 2 Compass.

- **Light weight miniature head**
- **Fits any vehicle or rig**
- **Mounts in any orientation**

Model 971-1 Option 3 Sonar Head.
Frequency: 675 kHz.
Beamwidth, Fan: 1.7° horiz., 30° vertical, (typical).
Beamwidth, Cone: 1.7° conical.
Mechanical Resolution: 0.225° (step angle).
Scanning: 360° continuous, or locked, any 30° step.
Power Supply: 22-32 Vdc at 1A max., at connector.
Connector: Glenair GL 30G4P-BC, bulkhead 4 pin.
Cable: 4000 m (13000 ft) maximum length.
Construction: Aluminum alloy 6061-T6, rigid PVC, 300 Series stainless steel, epoxy.
Finish: Hard anodise (MIL-A-8625 Type II) red.
Temperature: Operating −10°C to +40°C.
Storage −50°C to +50°C.
Depth: 1000 m (3300 ft) maximum working.
Dimensions: 89 mm (3.5 in) diameter x 406 mm (16.0 in) long, plus connector.
Option 2: Add 102 mm (4.0 in) to housing.
Weight: In Air 4.1 kg (9.0 lb) Opt. 2: 5.3 kg (11.7 lb)
In Water 1.9 kg (4.2 lb) Opt. 2: 2.6 kg (5.8 lb)

Model 971-1 Option 3 Sonar Head

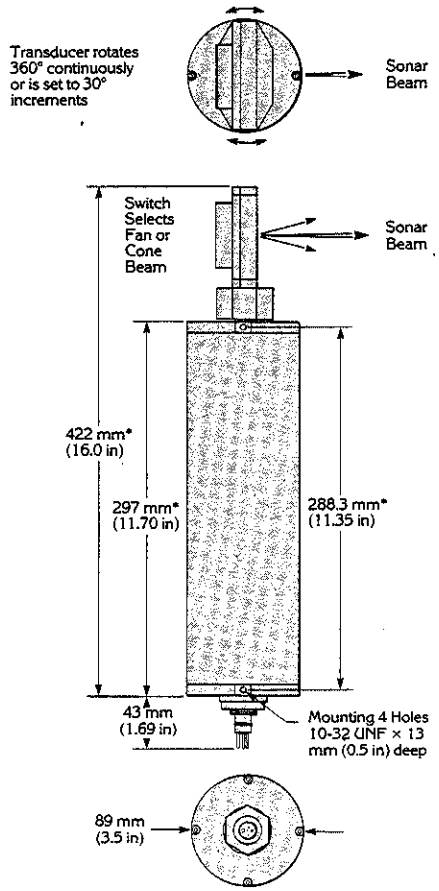

*Option 2 Add 101.6 mm (4.0 in)

- **Compact processor/controller**
- **Comprehensive modes**
- **Simple, logical controls**

Model 971-2 Sonar Processor
Display Modes: Sector, Polar, Perspective, Side-Scan Linear, Profile, (Menu Test).
Ranges: 0-5, 10, 20, 50, 100 m. and equivalent feet.
Scanning: 360° continuous. 30°, 60°, 120°, 180° arc.
Sector Centre: 0°, 30°, 60°, 90°, 120°, 150°, 180°, 210°, 240°, 270°, 300°, 330°.
Scanning Speed: Slow — 1 shot per step
Medium — 1 shot per 2 steps
Fast — 1 shot per 4 steps.
Side Scan: Transducer locked at any sector centre.
Data Resolution: 512 x 512 x 128 levels (colours).
Timing Resolution: ±16 µs [≡± 12 mm (±0.5 in)].
Video Ouput: RGB with composite sync. on all channels. Analogue 1V p-p into 75 Ω.
Cursor Control: Moveable to any pixel on display.
Zoom: Magnify x2, x4 linear. Area centred on cursor.
Heading: Option 2 Mag. Compass 0.7° resolution.
Readout: Cursor Range, Bearing, Heading, on CRT.
RS-232-C: Controls front panel settings.
Inputs custom colour tables.
Inputs user on-screen labels - date, time, location, etc.
Outputs: Profiles, cursor, compass.
Temperature: Operating −5° to +40°C.
Storage −20°C to +60°C.
Power Supply: 120/240 V, 60/50 Hz, 2/1A.
Dimensions: 483 mm (19 in) wide x 178 mm (7 in) high x 432 mm (17 in) deep.
Weight: 15.2 kg (33.5 lb).

Model 971-2 Sonar Processor

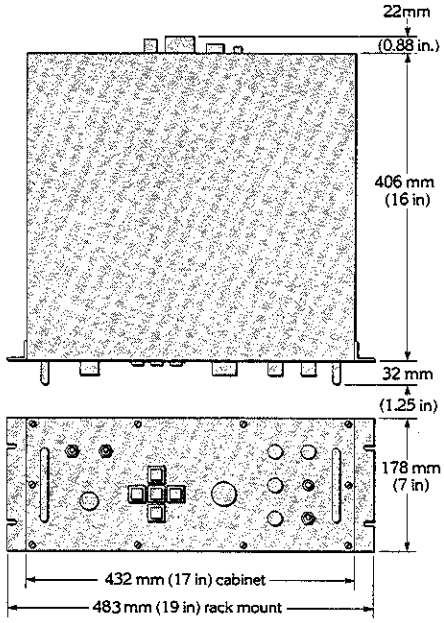

- **Very high resolution monitor**
- **Direct RGB input**
- **¼ million pixel display**

Model 971-3 Sonar Display
Screen Size: 330 mm (13 in) diagonal.
Phosphor: Long persistance.
Resolution: 512 x 512 pixels.
Signal: RGB, Analgue 1 V p-p.
Input: 3 x BNC, 75Ω or high Z (loop through).
Raster: 525 lines interlaced, 15,750 Hz (NTSC) or 625 lines interlaced, 15,625 Hz (PAL)
Temperature: Operating −5°C to +40°C.
Storage −20°C to +60°C.
Power: 120/240 V, 60/50 Hz, 2/1A.
Dimensions: 374 mm (14.7in) wide x 351 mm (13.8in) high x 409mm (16.1in) deep.
Weight: 18 kg (40 lb).
Note: Users may supply their own monitor.

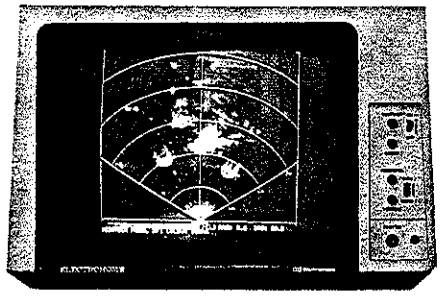

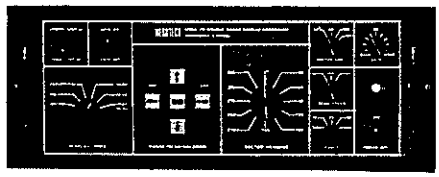

Model 971 produces high resolution images and profiles on precision CRT. Horizontal profile shown, (5 m range) is a cross-section of 5 pilings, 300 mm (1 ft) diameter.

Ordering Information:
Model 971-1Option 3 Sonar Head, Fan/Cone Tdcr.
Model 971-2 Sonar Processor.
Model 971-3 Sonar Display.
Option 2 Magnetic Compass
Standard Accessories for:
971-1: Glenair GL 20G4S-D dummy (fitted).
Glenair GL 20G4S-F3 underwater connector with 1 m (3 ft) tail.
Glenair GL 20G402 locking sleeve.
971-2: Power Cable MS to US 3 pin, or tail.
Signal Cable MS to tail.
Output Cables 3 x BNC male to BNC male
I/O Cable MS to D type.
971-3: Power Cable
System: Operator's manual, Service manual.

***Note:** Specifications subject to change without notice.

MESOTECH

MESOTECH SYSTEMS LTD. 2830 Huntington Pl. Port Coquitlam, B.C., Canada V3C 4T3
Telephone: (604) 464-8144 Telex: 04-353637

971L3 5m/5/84 MacDonald Printing

Flexible pipe: What it really is and how it solves so many problems

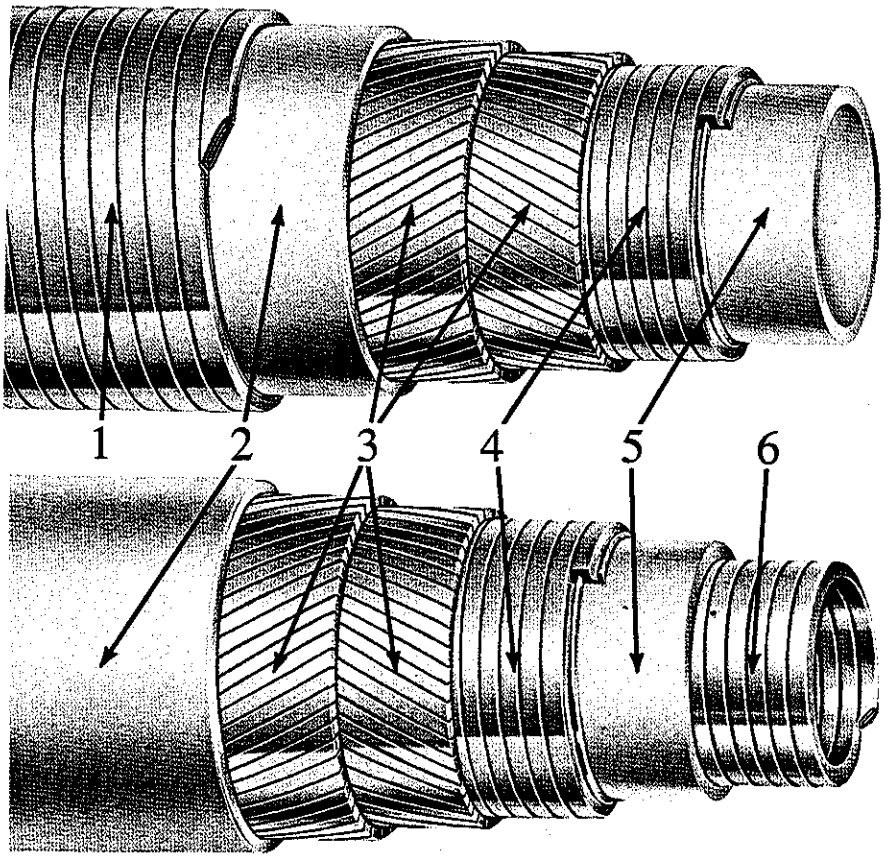

1. Interlocking stainless steel outer wrap protects outer thermoplastic layer.

2. Outer thermoplastic layer protects steel structural components from corrosion; resists abrasion and chemicals.

3. Contiguous layers of spiraling steel wire provide tensile strength.

4. Steel carcass of interlocking, spiraled Z-section withstands high internal and external pressures, resists kinking.

5. Inner thermoplastic liner makes the assembly leaktight, isolates steel components from fluids, resists abrasion and chemicals.

6. Interlocking stainless steel liner protects the thermoplastic layer from damage by TFL tools.

"Flexible pipe" isn't just a fancy advertising name for another kind of hose. Coflexip flexible pipe actually has the pressure rating, crush strength and safety factors of rigid API steel pipe, *and* the flexibility of reinforced rubber hose. For most sizes and pressure ratings, it actually has a smaller bending radius than the same size hose.

By combining these two qualities, Coflexip solves a host of drilling and production problems.

Flexibility saves in offshore construction

Since 1972, over 2,500,000 feet of Coflexip lines have been installed for production systems. Flexibility makes Coflexip much simpler and cheaper to use than rigid pipe for many applications. In the Gulf of Mexico, for example, a Coflexip riser can be installed with a smaller crew and vessel, in less time, with greater tolerances, in a shorter weather window, and with a fraction of the equipment cost. Workboats and small platform cranes can take the place of huge lay barges and derrick barges. Plus, Coflexip lines are designed to outlast rigid line.

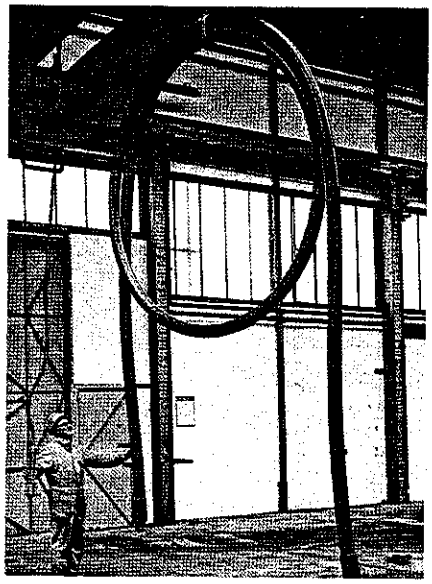

This 10,000-psi W.P., three-inch Coflexip line has the same safety factor and crush strength as rigid API spec pipe, yet has a smaller bending radius than rubber hose with the same I.D. and pressure rating (36" vs. 48").

Our literature on production applications gives step-by-step comparisons of Coflexip versus rigid pipe installations.

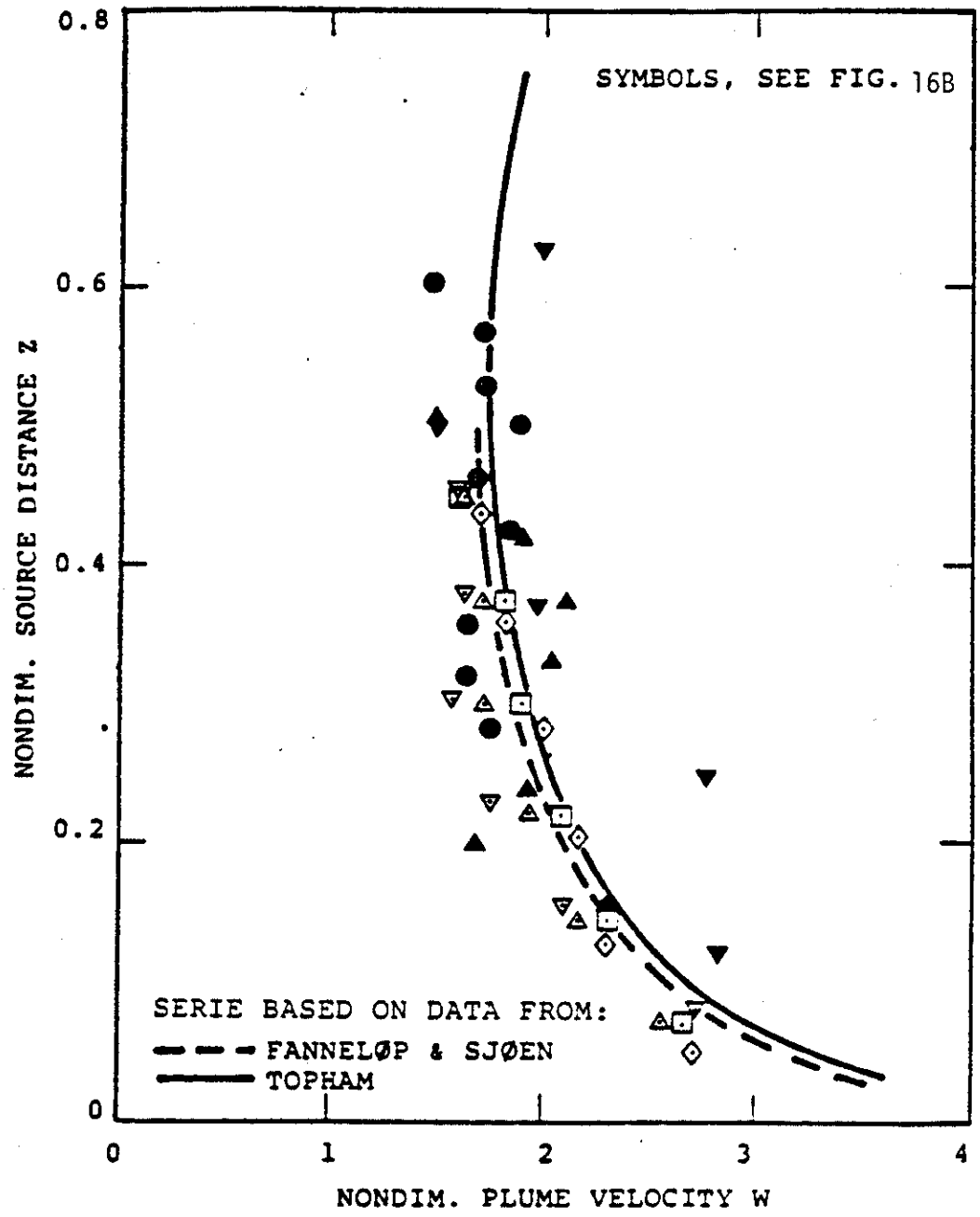

FIGURE 16C

COMPARISON OF MEASURED AND CALCULATED CENTERLINE PLUME VELOCITIES,(REF. A1).

From Sjøen, Ref 34.

In drilling, it outperforms both hose and pipe with swivel joints

Coflexip flexible pipe lowers costs and raises the safety factor on drilling rigs.

Coflexip initially costs more than other alternatives for choke and kill lines, cementing/acidizing/fracking lines and other drilling jobs. But it lasts so much longer that the cost is actually lower in the long run. That's based on the materials cost alone. If the downtime cost avoided by a line that lasts longer is included, Coflexip is cheap compared to other solutions.

For many jobs, Coflexip is a lot safer than rubber or pipe with swivels because of its strength, durability, and corrosion resistance. What price can be put on that?

Our literature on drilling applications tells exactly how and where Coflexip can save you money.

Actually tougher than rigid steel pipe

In comparison to API 5LX steel pipe, Coflexip flexible steel pipe generally has better abrasion resistance, better corrosion resistance, and better resistance to vibration and flexing fatigue. It requires less maintenance in most applications and it is compatible with more chemicals, including H_2S.

Compared to reinforced rubber hose, Coflexip has greater crush strength, abrasion resistance, ultraviolet resistance, and flexing-fatigue resistance. It stands up to a wider range of chemicals, including H_2S, and suffers almost no aging damage.

Coflexip works because of a unique design

Coflexip is a unique combination of high-strength steels and thermoplastic.

In the basic Coflexip construction, the carcass of interlocking Z-section steel handles the radial loads, including internal pressure, and keeps the pipe from kinking or collapsing. Alternating spiral layers of heavy steel wire handle the tension loads and give the pipe a tensile strength comparable to rigid pipe.

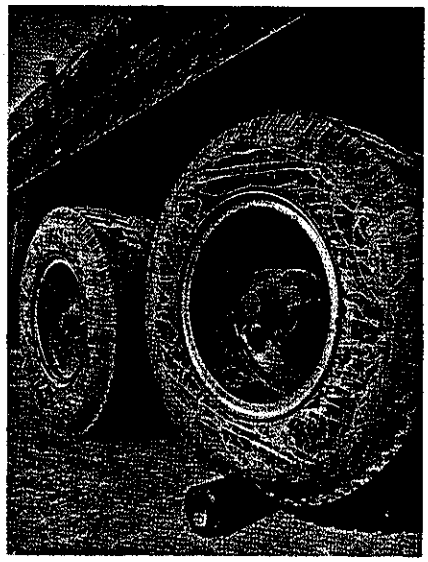

Crush strength of Coflexip pipe is demonstrated by parking a truckload of drill pipe on a piece of rotary hose. The pipe remains perfectly round under the 9,000-lb. direct load.

Outside and inside, thermoplastic layers protect the steel components against corrosion and make the pipe leakproof. There is no bonding between layers. When the pipe bends, each layer moves independently. That's why the fatigue resistance of Coflexip is much higher than that of reinforced hoses.

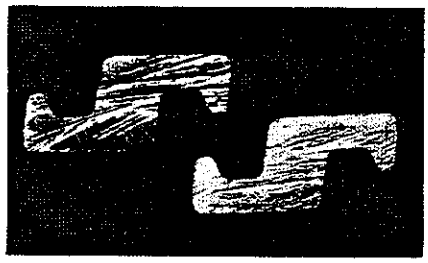

The interlocking spiral of steel Z-section is the structural element that withstands radial loads from internal and external pressures, and keeps the pipe from kinking.

For most drilling applications, the outer thermoplastic layer is covered with a stainless steel wrap for extra protection. For production applications, an extra stainless steel layer goes on the inside, to prevent damage from TFL tools.

That's the *basic* structure. Dozens of Coflexip structures have been developed for specific applications in sizes from 1 to 22 inches I.D., with working pressures up to 15,000 psi, and continuous lengths of more than one mile.

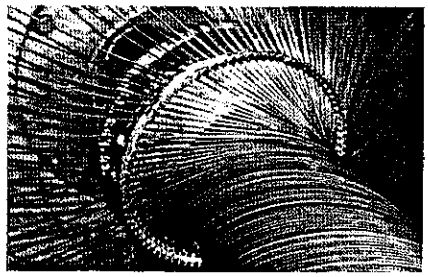

There is no bonding between layers in the Coflexip structure as there is in the structure of reinforced rubber hose. That's why Coflexip has such extremely high resistance to flex fatigue. Four-inch Coflexip pipe has withstood 1,600,000 flexing cycles under a 10,000 psi maximum working pressure before failure due to the unnaturally induced temperature of +100°C.

A long list of uses

Since 1972, Coflexip has been successfully used in almost every major oilfield in the world. In the Gulf of Mexico and onshore, it serves as:

- Offshore platform risers
- Subsea flowlines
- Jumper lines
- Subsea mudslide protectors
- Vent and flare lines
- Temporary production systems
- Permanent production systems

- Expansion joints
- Test lines
- Hydraulic lines
- Rotary and vibrator lines
- Choke and kill lines
- Choke manifold lines
- Acidizing/cementing/fracking lines
- Tank roof drains
- Skimmer lines
- Foam lines

Coflexip lines are available from stock in the U.S.

We stock miles of Coflexip, in a variety of diameters, structures, and pressure ratings, right here in the U.S.

Our technical services group in Houston will engineer the Coflexip line to fit your need. Our assembly plant in Jacintoport will cut the line to length and attach the specified end fittings with a sophisticated bonding process. Every finished line undergoes a hydrostatic test certified by an independent lab. Customers are welcome to attend.

Our Jacintoport plant is easily accessible to workboats and barges for fast offshore installments in the Gulf. All the tools and equipment for installing the Coflexip line are right at hand, and our specialized laying teams assist you during offshore operations.

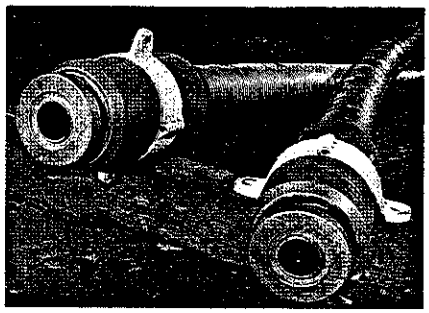

Coflexip lines are available with any type of end connections. The connector-to-pipe bond is even stronger than the flexible pipe itself. End connections are internally flush with the I.D. of the pipe.

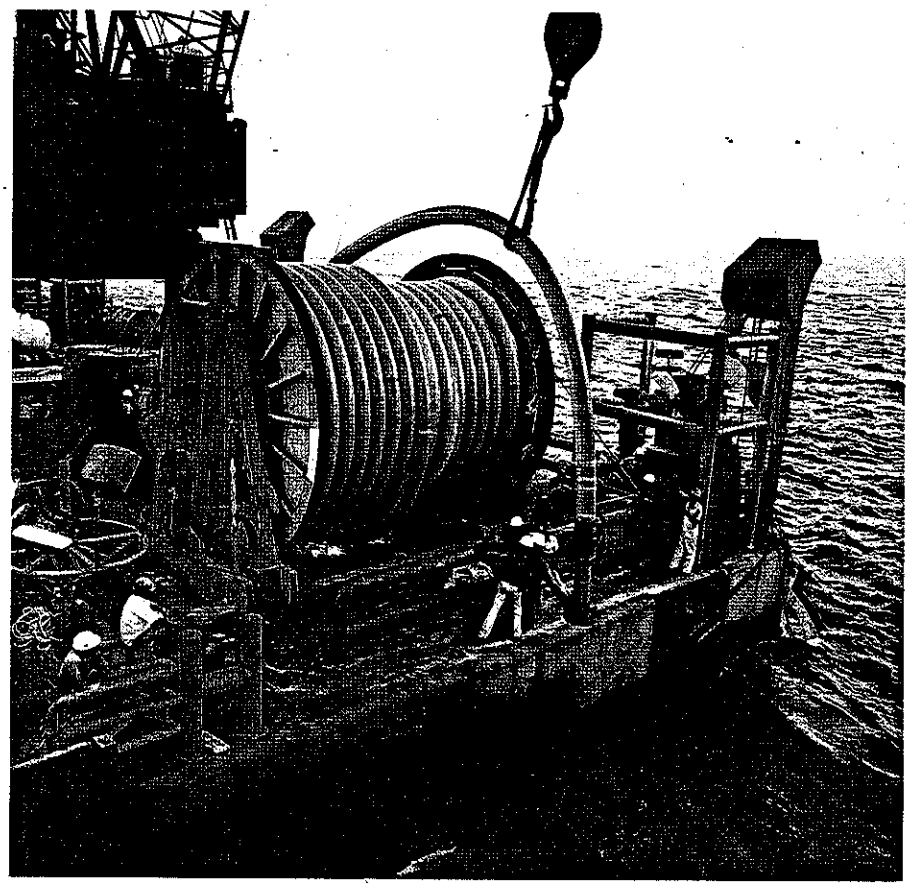

10-inch I.D. flexible pipe being payed off during a Gulf of Mexico installation. A special Coflexip winch is used here to control the rotation of the drum.

Coflexip & Services Inc.
Sales Headquarters and Technical Services
4242 Southwest Freeway
Houston, Texas 77027
(713) 627-8540
TWX 910-881-1159

PIPEMASTER®

RISER AND GUIDELINE TENSIONERS

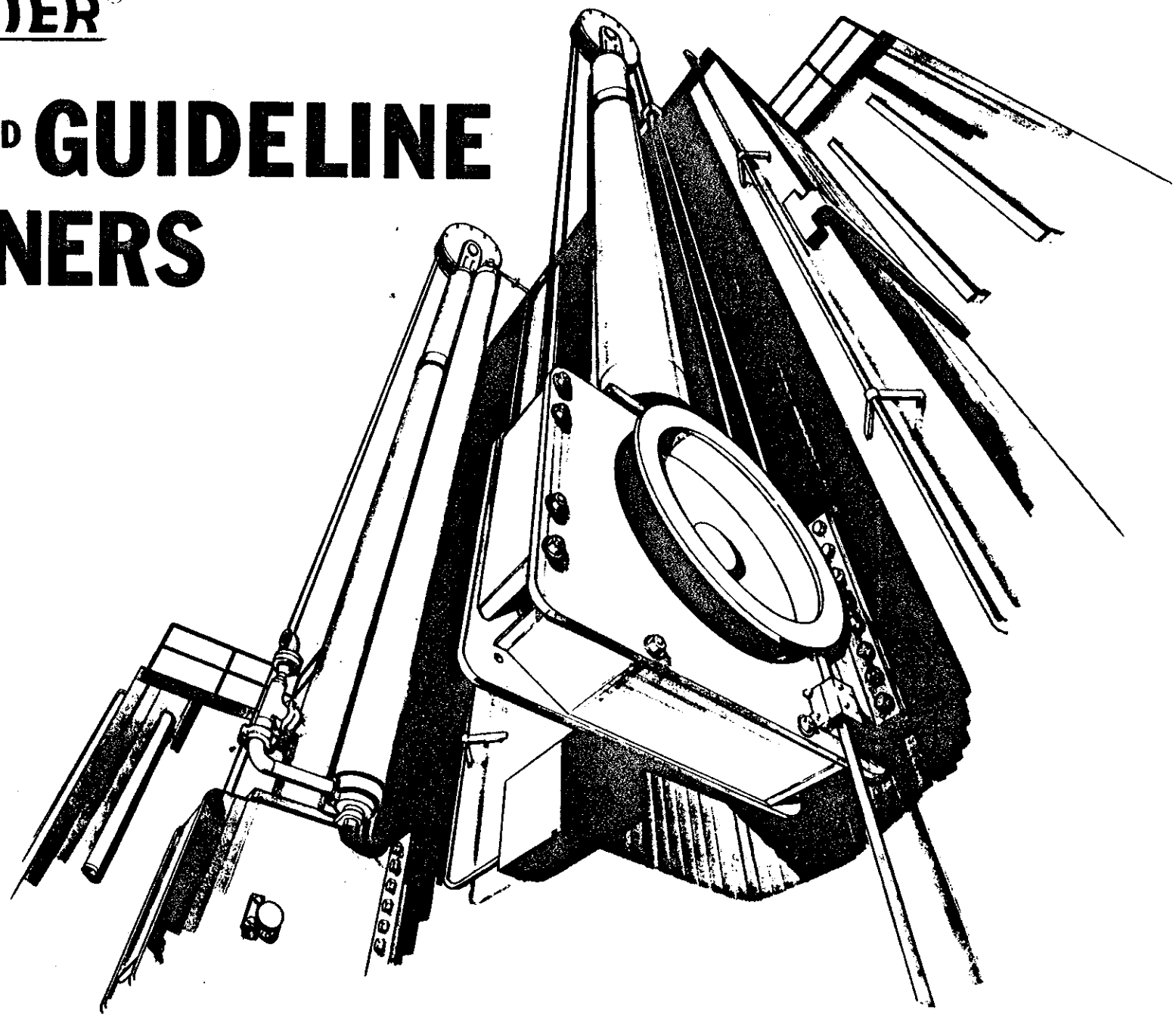

western
GEAR CORPORATION

WESTERN GEAR MACHINERY CO: EVERETT, WASHINGTON, USA

PIPEMASTER®

Riser and Guideline Tensioners

western GEAR CORPORATION
Western Gear Machinery Co.
A Subsidiary of Western Gear Corporation Everett, Washington

2/85

Introduction

NOTE: THE DATA AND MATERIALS CONTAINED IN THIS BOOKLET MAY BE FURTHER REFINED AND DEVELOPED AND ARE SUBJECT TO CHANGE WITHOUT NOTICE.

western
GEAR CORPORATION

PIPEMASTER RISER AND GUIDELINE TENSIONERS

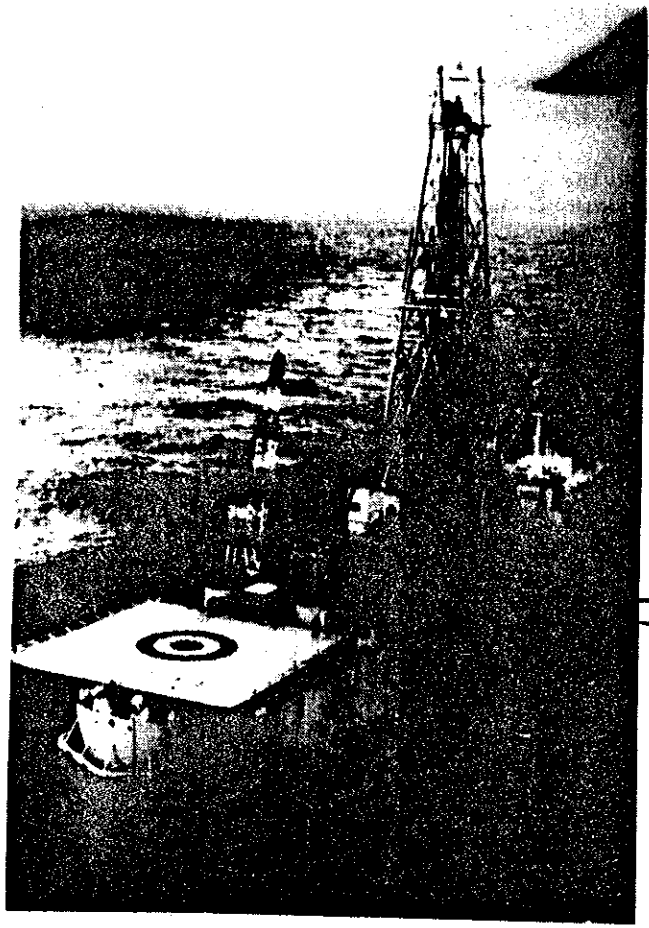

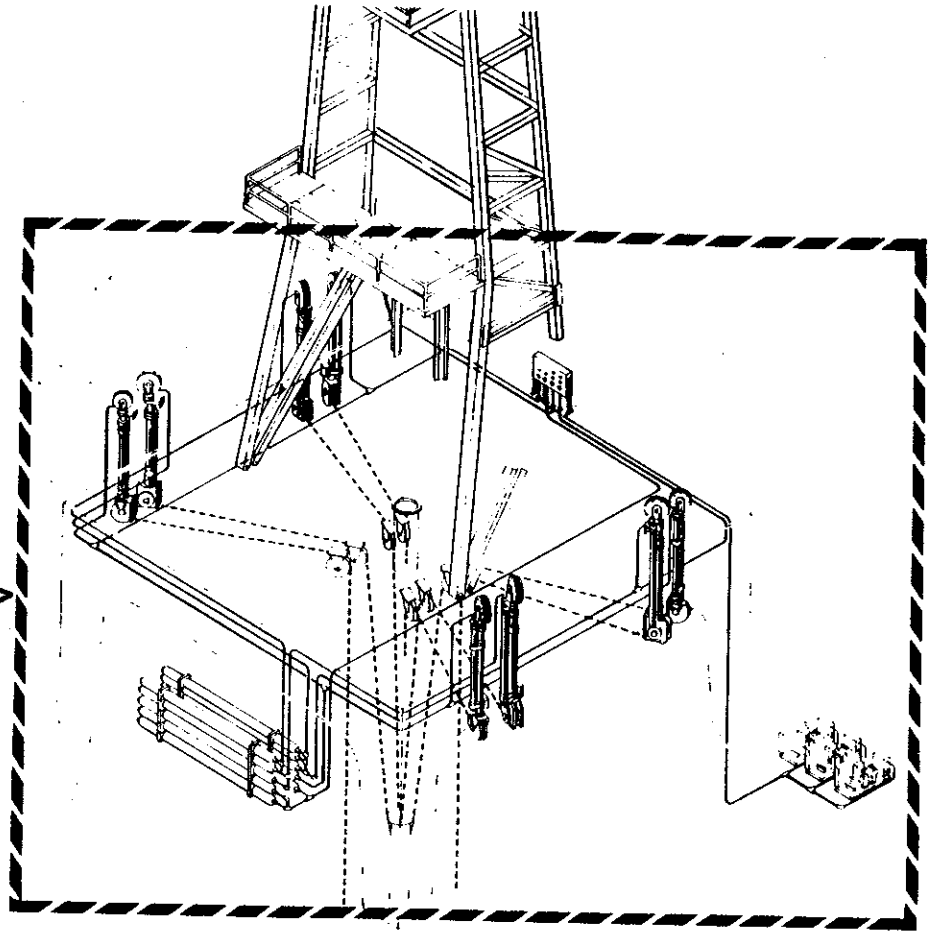

- A MECHANICAL TENSIONING SYSTEM TO MAINTAIN STRAIGHTNESS AND SUPPORT FOR MARINE RISER AND GUIDELINES.

western GEAR CORPORATION

PIPEMASTER PRODUCTIVITY FEATURES

REDUCED OPERATION COST

- RAM–TYPE TENSIONER REDUCES MAINTENANCE TIME FOR SEAL REPLACEMENT.
- SIMPLIFIED SHIPBOARD PIPING

= POTENTIAL COST SAVINGS

RELIABILITY

- DURABLE CONSTRUCTION
- DUAL BEARING SURFACE FOR RAM
- TRUE 16,000 LB, 80,000 LB, 160,000 LB, 250,000 LB CAPACITY RATING AT MID-STROKE
- LOW PRESSURE SYSTEM, 2,400 PSI MAX.

= REDUCTION OF RISK ELEMENTS INCREASES TENSIONER LIFE

REDUCED SPACE

- SHORT AND COMPACT TENSIONERS
- EFFECTIVE WIDTH OF DUAL 80,000 LB. RISER TENSIONERS EQUAL TO 52 IN.

= MORE AVAILABLE RIG FLOOR PERIMETER

SAFETY FEATURES

- FLOW CONTROL LIMITS MAXIMUM RAM SPEED INDEPENDENTLY OF OPERATING PRESSURE
- RING SPRING TO DECELERATE AND STOP RAM IN THE EVENT OF ROPE FAILURE.
- SHEAVE GUARDS FOR WIRE ROPE RETENTION

= RISK REDUCTION

western GEAR CORPORATION

OFFSHORE TENSIONER APPLICATIONS

DRILLSHIPS

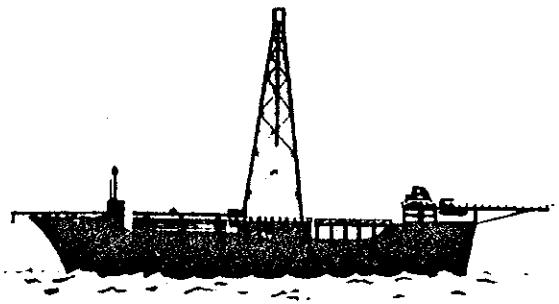

SEMI-SUBMERSIBLES

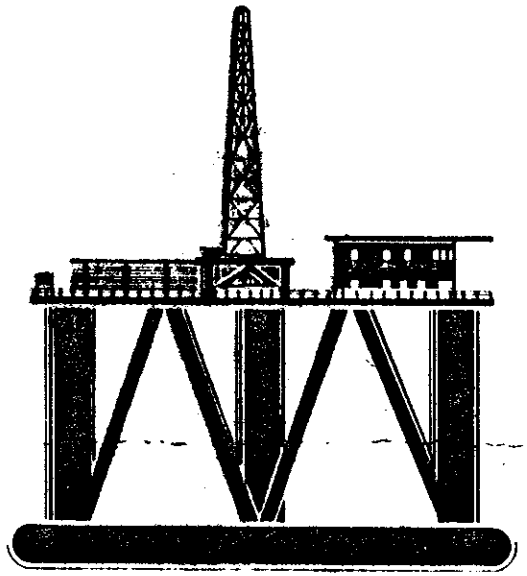

TENSION LEG PLATFORM

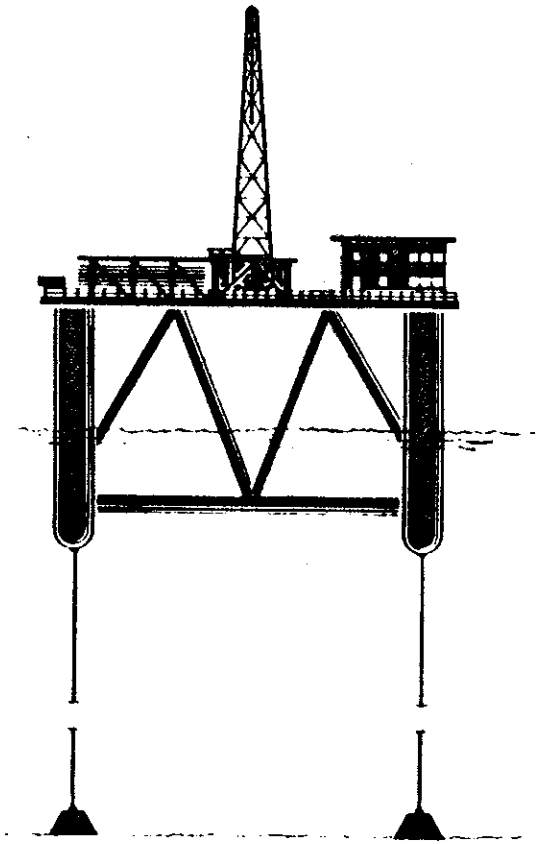

western GEAR CORPORATION

OFFSHORE TENSIONER APPLICATIONS

DRILLSHIPS

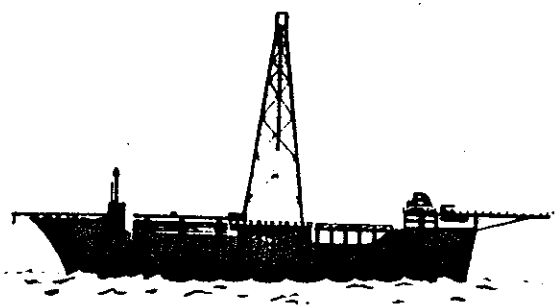

SEMI-SUBMERSIBLES

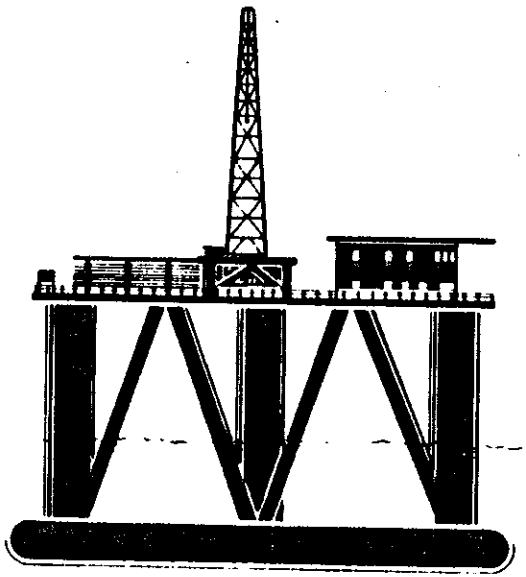

TENSION LEG PLATFORM

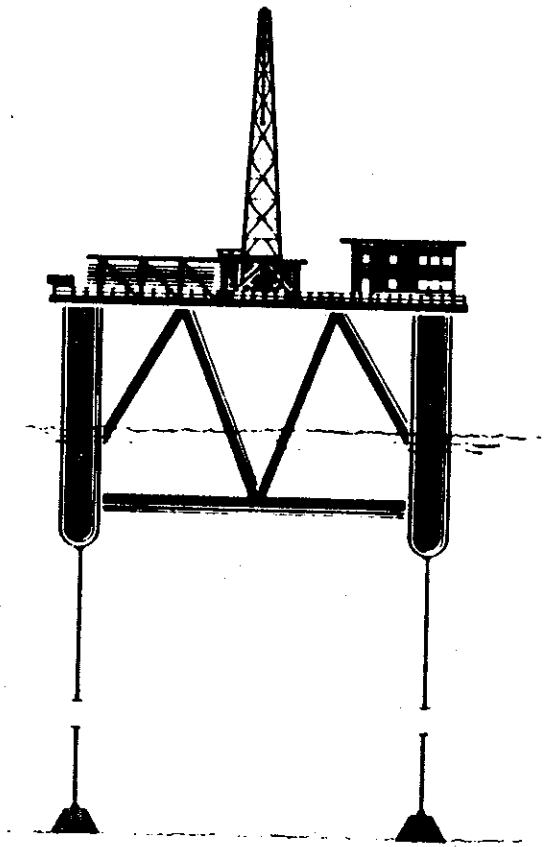

western GEAR CORPORATION

RISER TENSIONER APPLICATION

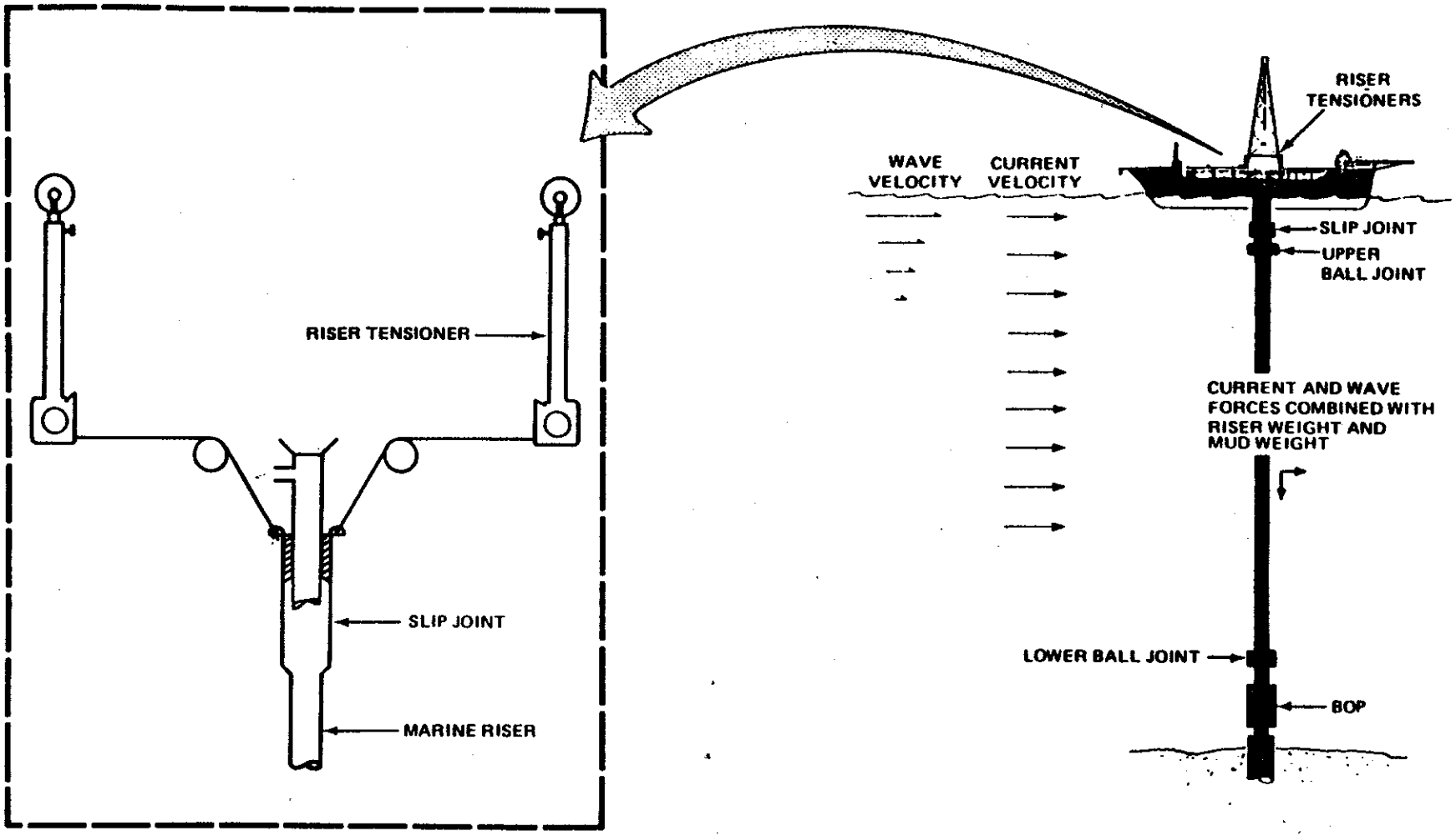

USE OF TENSIONERS TO RELIEVE RISER WEIGHT AND LOAD

GUIDELINE TENSIONER APPLICATION

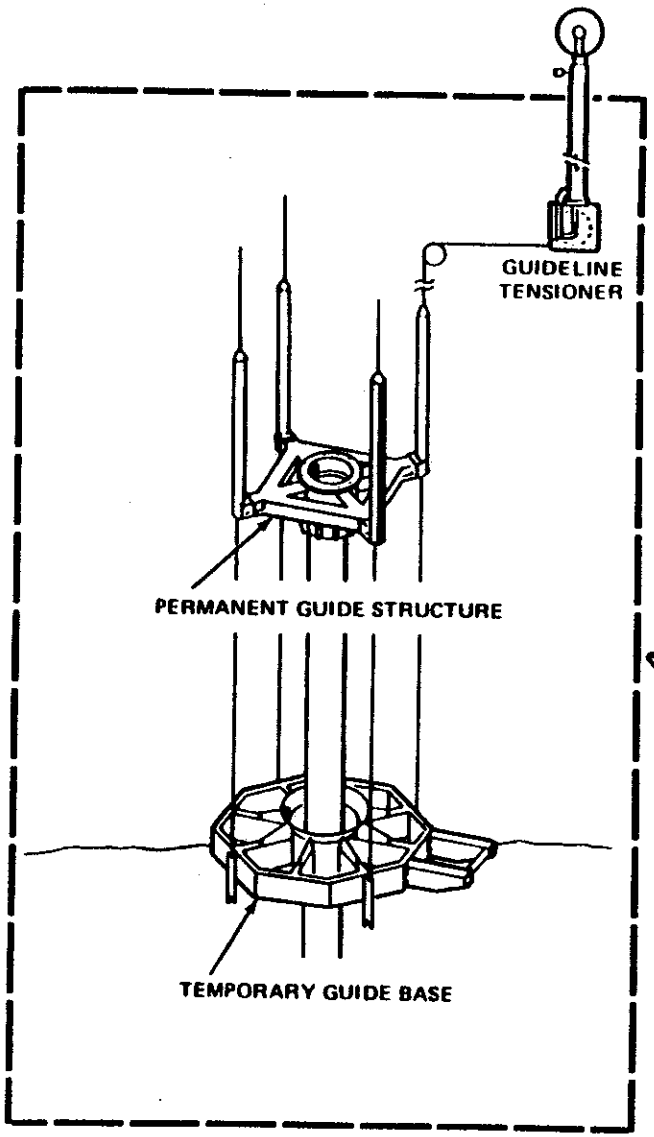

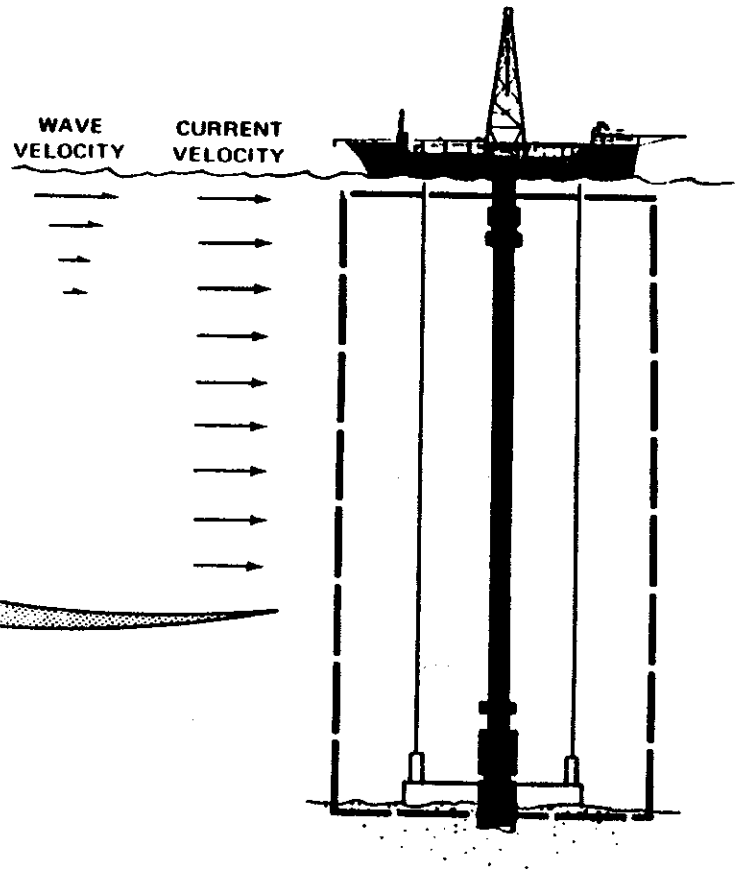

DEEP DRILLING REQUIRES GUIDELINES FOR POSITIONING BOP AND GUIDE STRUCTURE. TENSIONERS MAINTAIN STRAIGHTNESS OF GUIDELINES.

western
GEAR CORPORATION

RISER AND GUIDELINE TENSIONER SYSTEM

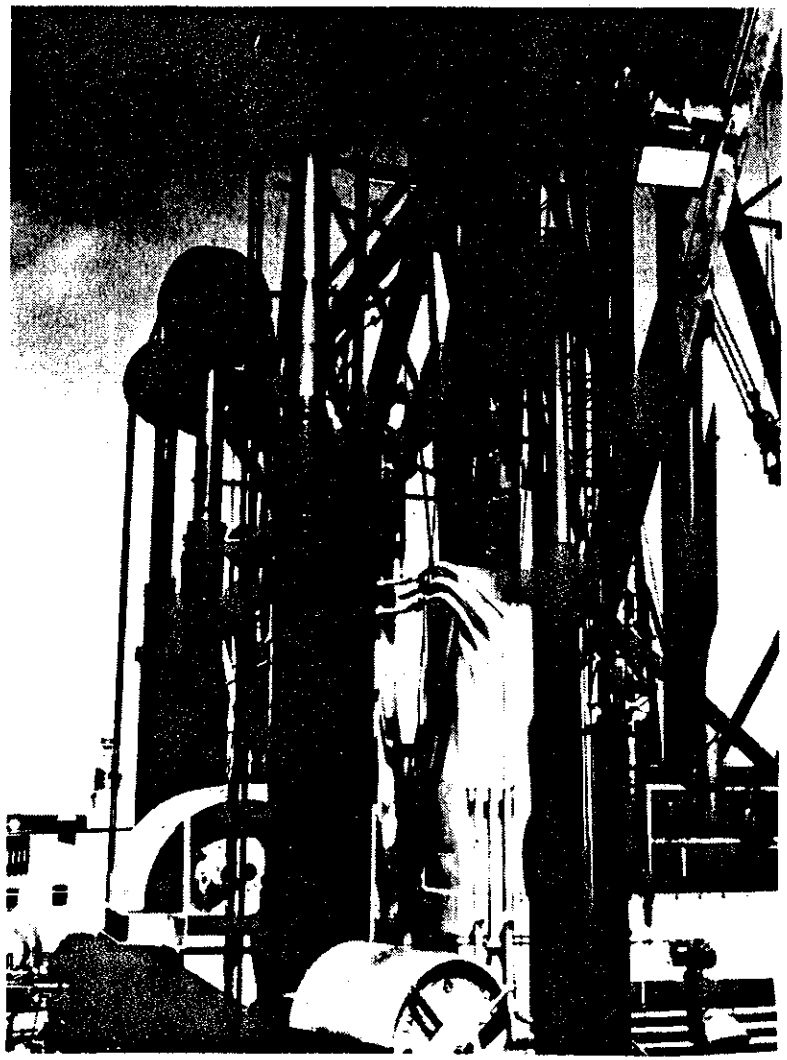

RISER AND GUIDELINE TENSIONER INSTALLATION

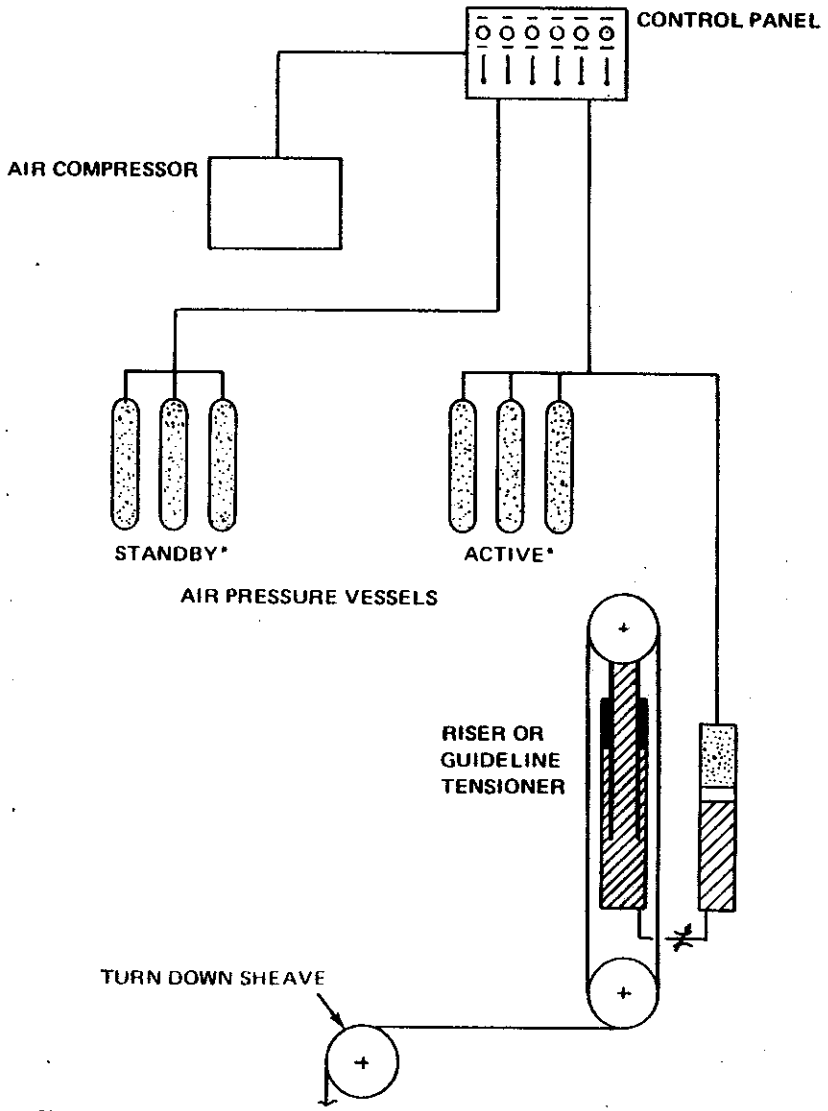

*NUMBER OF BOTTLES DEPENDENT UPON TENSIONER QUANTITIES

western GEAR CORPORATION

SPECIFICATIONS

	MAXIMUM SYSTEM OPERATIONAL AIR PRESSURE 2,204 PSIG	
250K	**RISER TENSIONER**	
	TENSION ELEMENT	CHAIN OR WIRE ROPE
	MAXIMUM CHAIN TRAVEL	50 FEET
	MIDSTROKE CHAIN TENSION (NOM.)	250,000 POUNDS
	HYDRAULIC FLUID CAPACITY	450 GALLONS
	MASS (WET, LESS CHAIN)	49,800 POUNDS
	MAXIMUM SYSTEM OPERATIONAL AIR PRESSURE 2,400 PSIG	
16K	**GUIDELINE TENSIONER**	
	SHEAVE SIZE	28 INCH
	WIRE ROPE SIZE	3/4 INCH DIAMETER
	MAXIMUM WIRE LINE TRAVEL	40 FEET
	MIDSTROKE LINE TENSION (NOMINAL)	16,000 POUNDS
	MAXIMUM LINE SPEED	600 FEET PER MINUTE
	HYDRAULIC FLUID CAPACITY	36 GALLONS
	WEIGHT (WET)	7,100 POUNDS

western GEAR CORPORATION

SPECIFICATIONS

	MAXIMUM SYSTEM OPERATIONAL AIR PRESSURE	2,400 PSIG
80K SINGLE OR DUAL	RISER TENSIONER	
	SHEAVE SIZE	52 INCH
	WIRE ROPE SIZE	1-3/4 INCH DIAMETER
	MAXIMUM WIRE LINE TRAVEL	50 FEET
	MIDSTROKE LINE TENSION (NOMINAL)	80,000/160,000 POUNDS*
	MAXIMUM LINE SPEED	600 FEET PER MINUTE
	HYDRAULIC FLUID CAPACITY	264/528 GALLONS*
	WEIGHT (WET)	24,900/49,700 POUNDS*
160K	RISER TENSIONER	
	TENSION ELEMENT	CHAIN OR WIRE ROPE
	MAXIMUM CHAIN TRAVEL	50 FEET
	MIDSTROKE CHAIN TENSION (NOM.)	160,000 POUNDS
	HYDRAULIC FLUID CAPACITY	450 GALLONS
	MASS (WET, LESS CHAIN)	42,600 POUNDS

SPECIFICATIONS

ALSO SPECIAL ADAPTATIONS OF OUR TENSIONERS

ARE AVAILABLE FOR TENSION LEG PLATFORMS

AND OTHER FLOATING PRODUCTION FACILITIES.

Mechanical Features

western
GEAR CORPORATION

RISER TENSIONER

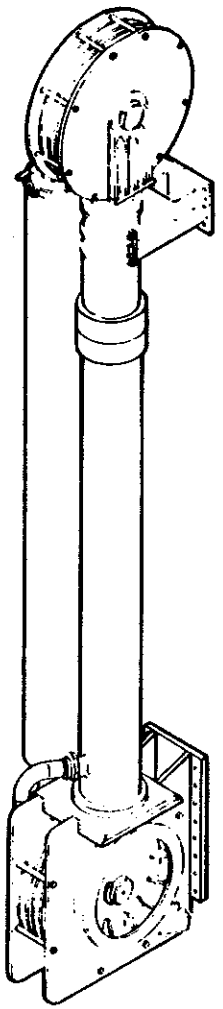

(RIGHT HAND CONFIGURATION SHOWN)

- RATED LOAD = 80,000 LBS.
- HYDRAULIC SYSTEM PRESSURIZED BY AIR
- MAX. SYSTEM PRESSURE = 2,400 PSI
- MAX. ROPE TRAVEL = 50 FT.
- FINISH = ORGANIC ZINC WITH POLYURETHANE TOP COAT
- AVAILABLE IN RIGHT AND LEFT HAND CONFIGURATIONS

80K RISER TENSIONER

MODEL VCT–1750–50

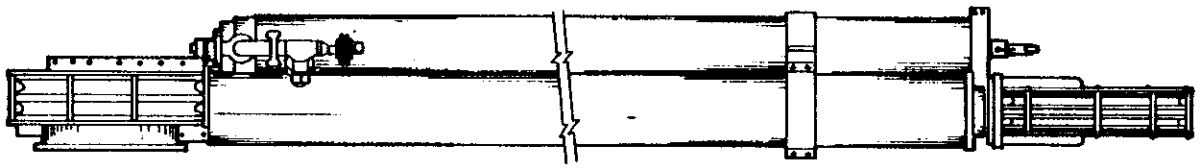

RIGHT HAND SHOWN

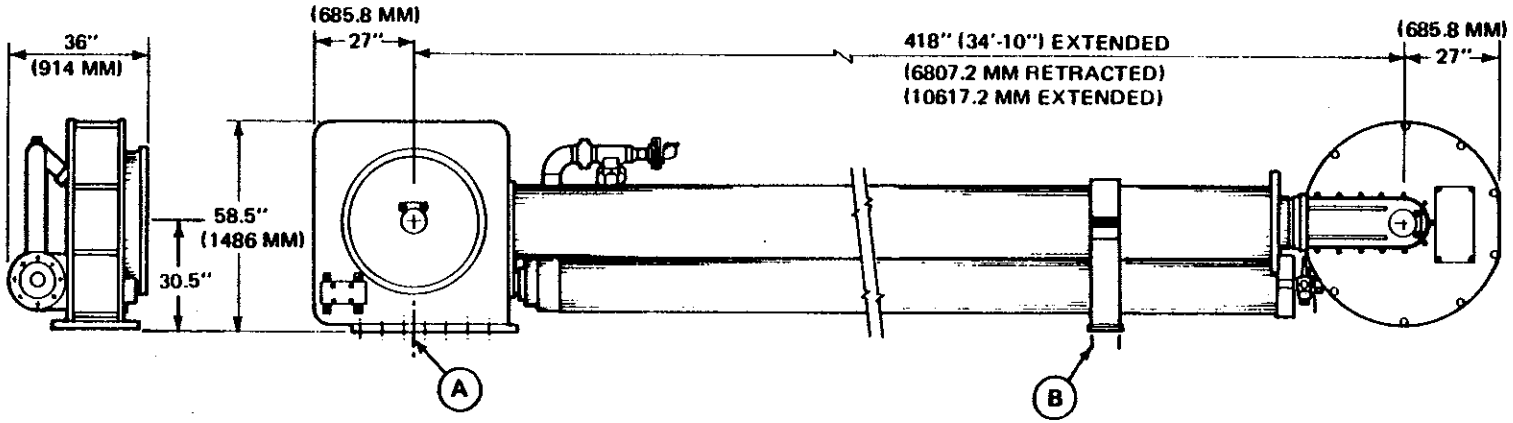

NOTES:

1) TENSIONER MAY BE MOUNTED HORZONTALLY OR VERTICALLY STROKING (STROKING UPWARD) S) AS SPECIFIED.
2) RECOMMENDED MOUNTING BOLTS (A) 1-1/4 DIA. SAE GR. 5, TORQUE TO 1250/1450 LB-FT.
   (B) 1" DIA. SAE GR. 5, TORQUE TO 585/645 LB.-FT.
3) SECURE LOWER BLOCK TO STRUCTURE. SHIM UNDER UPPER MOUNT AS REQ'D (WHILE SUPPORTING TENSIONER WEIGHT) AND SECI SECURE UPPER MOUNT.

western
GEAR CORPORATION

80K RISER TENSIONER

MODEL VCT–1750–50

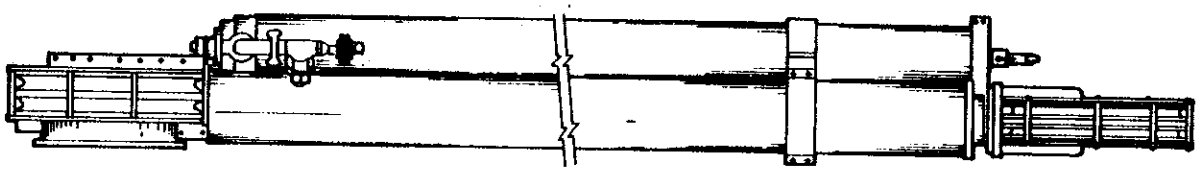

RIGHT HAND SHOWN

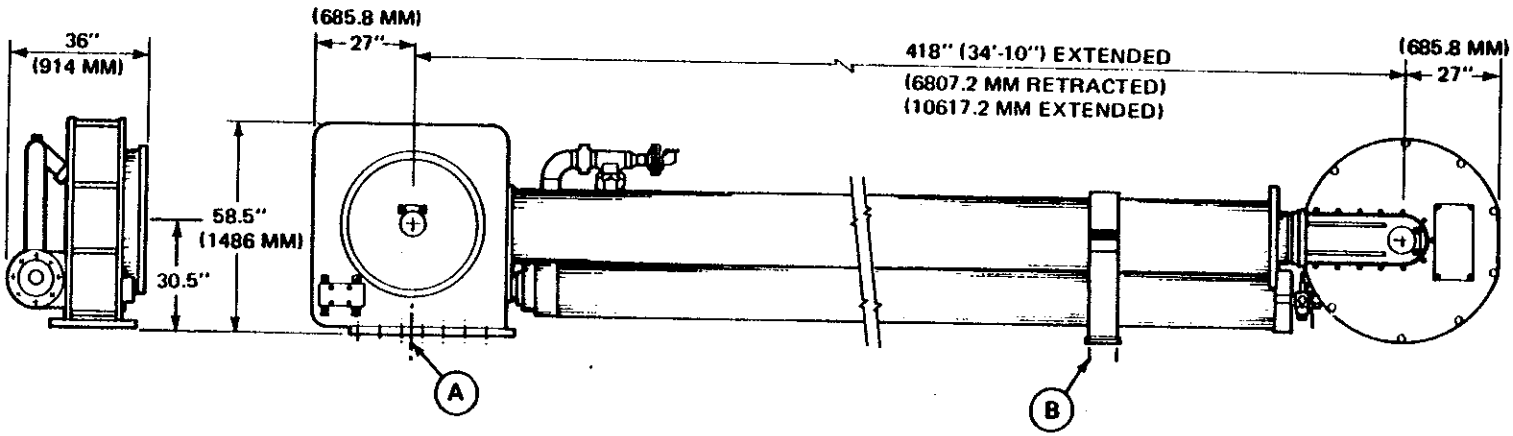

NOTES:

1) TENSIONER MAY BE MOUNTED HORZONTALLY OR VERTICALLY STROKING (STROKING UPWARD) S) AS SPECIFIED.
2) RECOMMENDED MOUNTING BOLTS (A) 1-1/4 DIA. SAE GR. 5, TORQUE TO 1250/1450 LB-FT.
   (B) 1" DIA. SAE GR. 5, TORQUE TO 585/645 LB.-FT.
3) SECURE LOWER BLOCK TO STRUCTURE. SHIM UNDER UPPER MOUNT AS REQ'D (WHILE SUPPORTING TENSIONER WEIGHT) AND SECI SECURE UPPER MOUNT.

western
GEAR CORPORATION

80K DUAL RISER TENSIONER

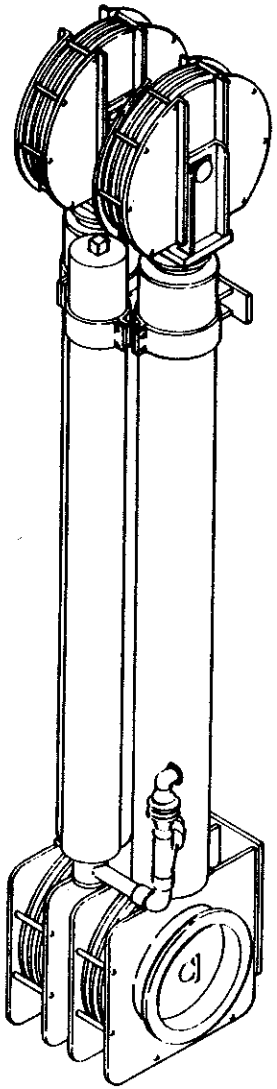

- RATED LOAD = 160,000 LBS.
  (80,000 LBS. PER RAM)
- HYDRAULIC SYSTEM PRESSURIZED BY AIR
- MAX. SYSTEM PRESSURE = 2,400 PSI
- MAX. ROPE TRAVEL = 50 FT. (EACH TENSIONER)
- FINISH = ORGANIC ZINC WITH EPOXY PRIMER TIE COAT
  AND ALIPHATIC URETHANE TOP COAT (ORANGE)

80K DUAL RISER TENSIONER

MODEL VCT-1750-50-D

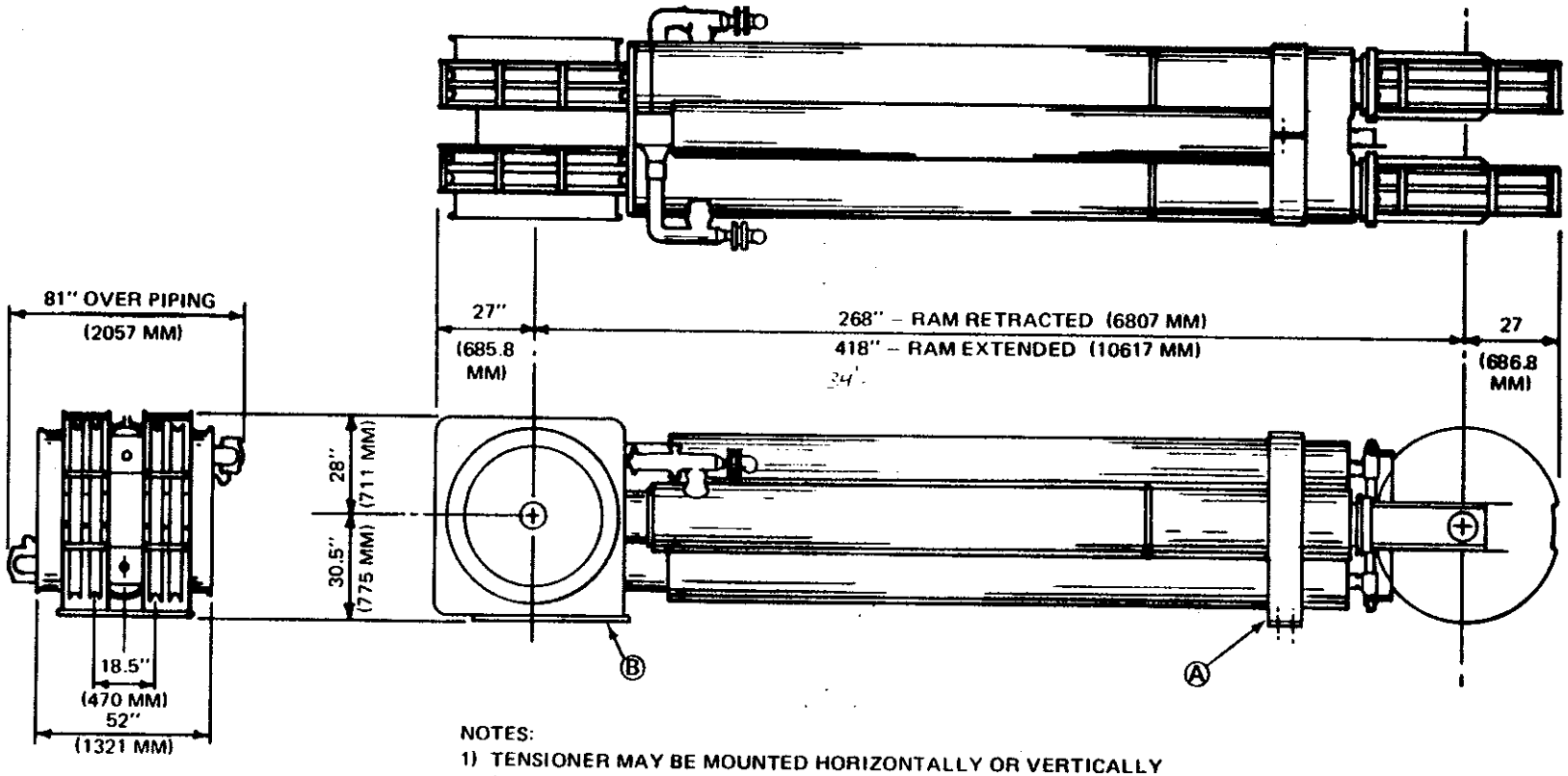

NOTES:

1) TENSIONER MAY BE MOUNTED HORIZONTALLY OR VERTICALLY (STROKING UPWARDS) AS SPECIFIED.
2) RECOMMENDED MOUNTING BOLTS– Ⓐ 1" DIA. SAE GR 5, TORQUED 585/645 LB.-FT. TORQUE TO 525 FT.-LBS. Ⓑ 1-1/4 DIA. SAE GR 5, TORQUED 1250/1480 LB.- FT.
3) SECURE LOWER BLOCK TO STRUCTURE. SHIM UNDER UPPER MOUNT AS REQ'D (WHILE SUPPORTING TENSIONER WEIGHT) AND SECURE UPPER MOUNT.
4) MULTIPLE TENSIONER INSTALLATION POSSIBLE BY NESTING ON 67 INCH CENTERS.
5) MOUNTING INTERCHANGEABLE WITH SINGLE TENSIONER INSTALLATIONS.

160K RISER TENSIONER
MODEL VCT-160LC-50

(AVAILABLE FOR USE WITH WIRE ROPE OR CHAIN — CHAIN MODEL SHOWN)

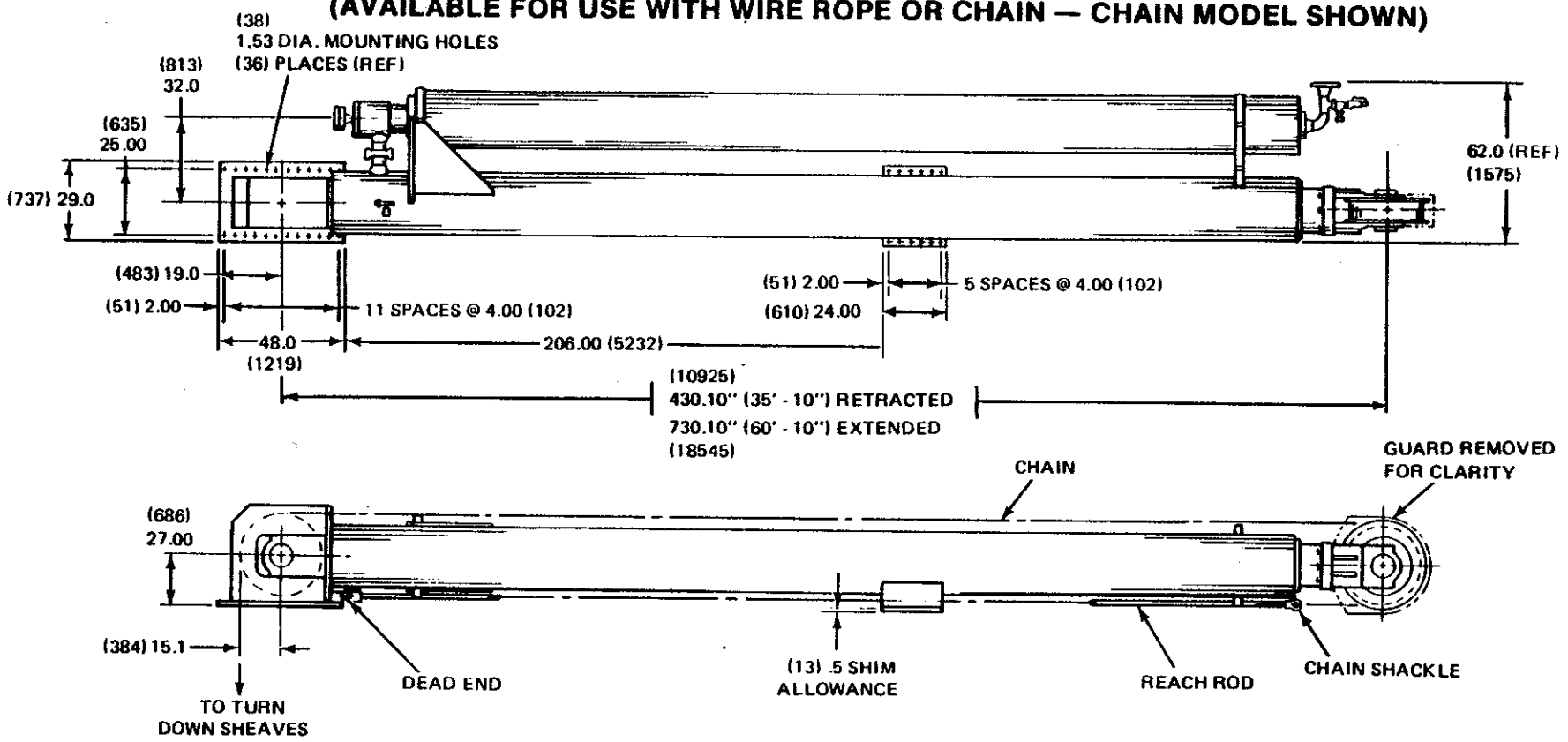

NOTES:

1. TENSIONER WILL BE MOUNTED VERTICALLY WITH RAM STROKING UPWARD.
2. RECOMMENDED MOUNTING BOLTS 1.50 DIA., SAE J429 GRADE 5 (M36, 8.8) TORQUED TO 1700/2000 LB-FT (2300/2700 N m).
3. FASTEN LOWER MOUNT TO STRUCTURE, SHIM UPPER MOUNT AS REQUIRED TO ALIGN TENSIONER, THEN SECURE

SPECIFICATIONS:

1. 160,000 LBS (712 kN) CHAIN PULL
2. 50' - 0" (15.24m) CHAIN TRAVEL.
3. CHAIN ULTIMATE STRENGTH $\geq$ 640,000 LBS (2847 kN) $\therefore$ FACTOR OF SAFETY $\sim$ 4:1.
4. WHEEL TREAD DIA. = 27.38 INCHES (695.3)
5. WHEEL TREAD WIDTH = 10.0 INCHES (25.4)
6. MAXIMUM CHAIN SPEED = 300 FPM (1.52m/s)
7. EST. NET MASS, DRY = 42,600 LBS (19320kg)
   WET = 46,350 LBS (21020kg)
8. FLUID CAPACITY = 450 GAL. (U.S.) (1.7m^3)
9. MAXIMUM SYSTEM PRESSURE = 2400 PSIG (16.55 MPa)

250K RISER TENSIONER (WIRE ROPE)
MODEL VCT-250WR-50

western GEAR CORPORATION

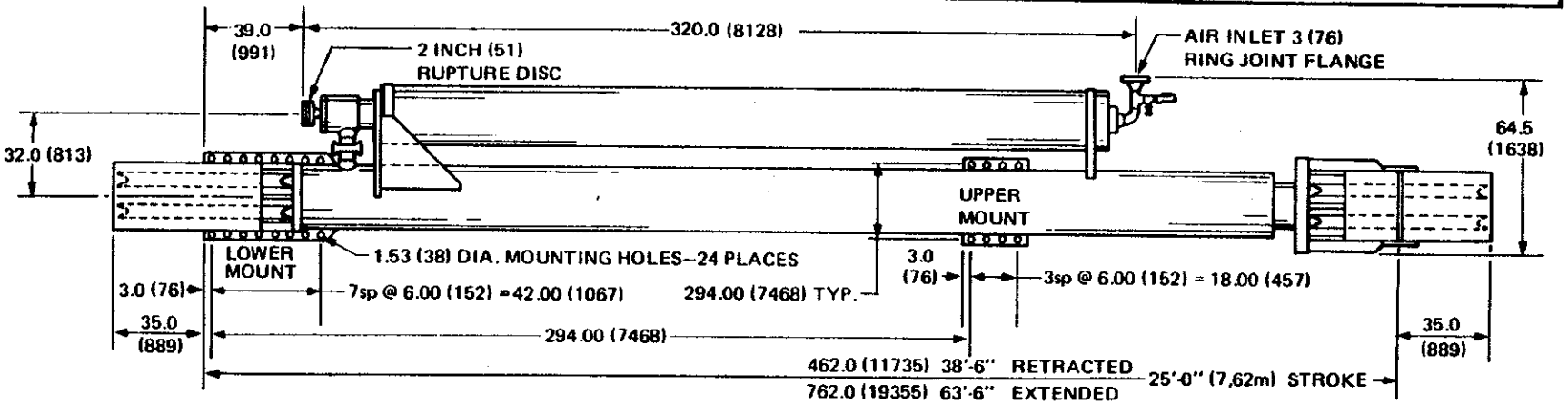

FRONT VIEW

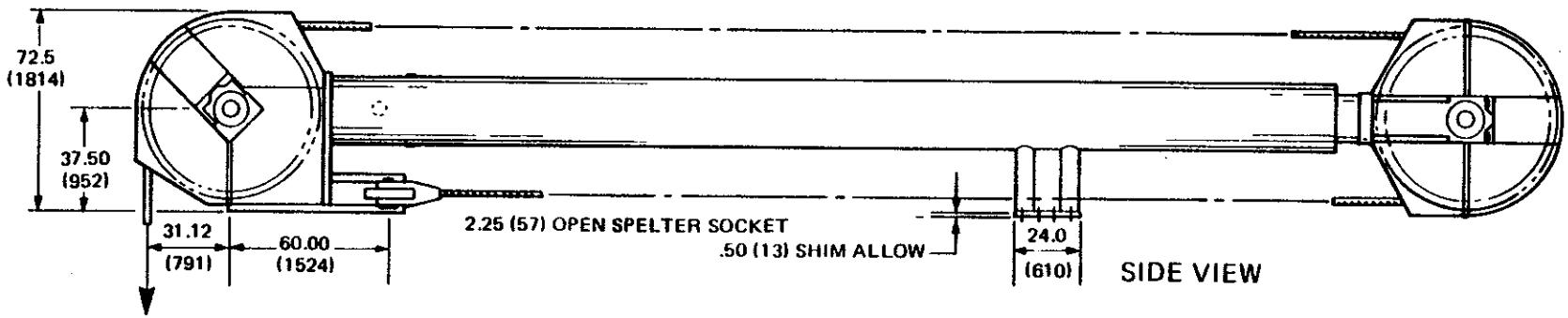

SIDE VIEW

NOTES:
1. TENSIONER MAY BE MOUNTED HORIZONTALLY OR VERTICALLY (STROKING UPWARDS).
2. MOUNTING BOLTS 1.5 DIA., SAE J429, GRADE 5 (M36, 8.8) TORQUED TO 1700/2000 FT. LBS (2300/2700 Nm).
3. FASTEN LOWER MOUNT TO FOUNDATION, THEN SHIM UPPER MOUNT AS REQUIRED.

DIMENSIONS SHOWN IN INCHES AND (mm) EXCEPT AS NOTED.

SPECIFICATIONS:
1. 250,000 LB (1112 kN) COMBINED LINE PULL
2. 50'-0" (15.24m) LINE TRAVEL
3. 2-2.25 (57) DIA., WIRE ROPES.
4. SHEAVE PITCH DIA. = 62.25 (1581), ANTI-FRICTION BEARINGS.
5. MAXIMUM LINE SPEED = 300 FPM (1,52 m/s).
6. MAXIMUM SYSTEM PRESSURE = 2400 PSIG (16.55 MPa)
7. FLUID CAPACITY = 550 GAL. U.S. (2,1m^3).
8. ESTIMATED WEIGHT, DRY = 54,600 LB (24760 kg)
   ESTIMATED WEIGHT, WET = 58,400 LB (26490 kg)
   ABOVE WEIGHT DOES NOT INCLUDE WIRE ROPE AND SOCKETS.

250K RISER TENSIONER (CHAIN)
MODEL VCT-250LC-50

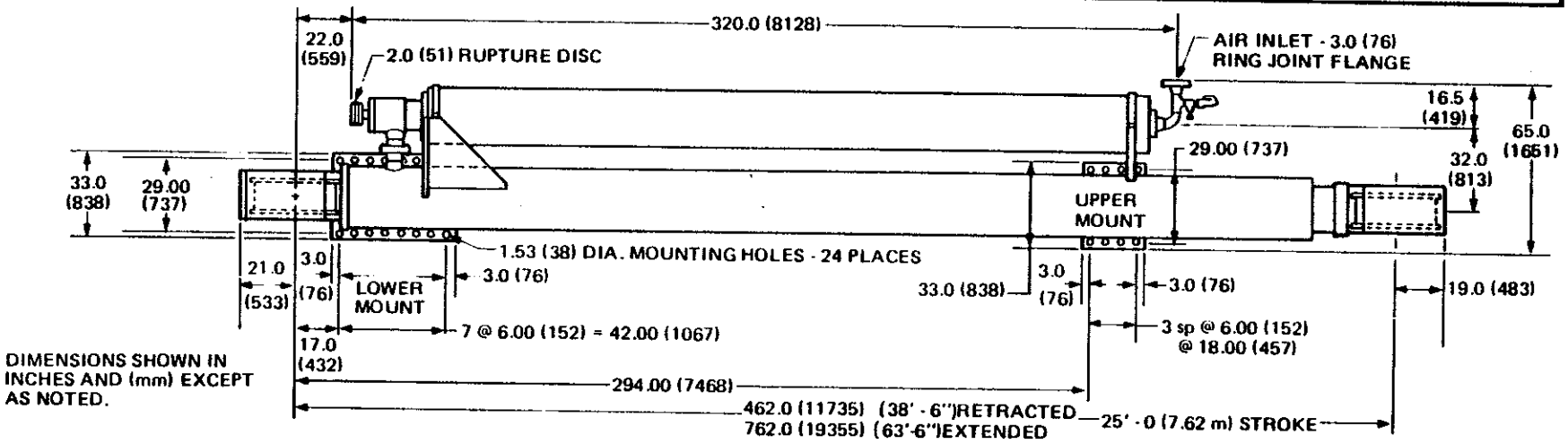

FRONT VIEW

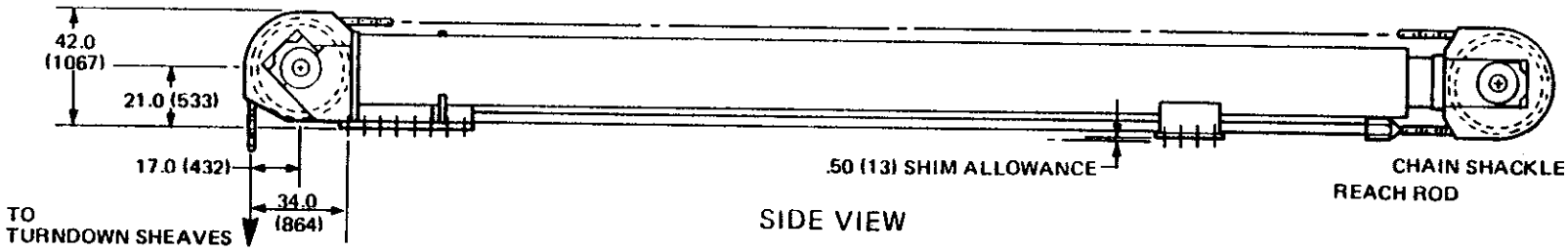

SIDE VIEW

NOTES:

1. TENSIONER MAY BE MOUNTED HORIZONTALLY OR VERTICALLY (STROKING UPWARDS).
2. MOUNTING BOLTS 1.50 DIA., SAE J429, GRADE 5 (M36,8.8) TORQUED TO 1700/2000 FT. LBS (2300/2700 Nm).
3. FASTEN LOWER MOUNT TO THE FOUNDATION. THEN SHIM THE UPPER MOUNT AS REQUIRED.
8. ESTIMATED WEIGHT DRY = 49,800 LB (22585 kg)
   ESTIMATED WEIGHT WET = 53,600 LB (24308 kg)
   CHAIN IS NOT INCLUDED IN THE ABOVE WEIGHT.
9. 150 FEET OF CHAIN WEIGH APPROX. 11,250 LB (5102 kg).

SPECIFICATIONS:

1. 250,000 LB (1112 kN) CHAIN PULL.
2. 50' - 0" (15,24 m) CHAIN TRAVEL.
3. SPECIAL LEAF CHAIN. ULTIMATE STRENGTH = 804,000 LB (3576 kN) MINIMUM.
4. WHEEL TREAD DIA. = 31.18 (792).
   WHEEL TREAD WIDTH = 11.50 (292).
   ANTI-FRICTION WHEEL BEARINGS.
5. MAXIMUM CHAIN SPEED = 300 FPM (1,52 m/s).
6. MAXIMUM SYSTEM PRESSURE = 2400 PSIG (16.55 MPa)
7. FLUID CAPACITY 550 GAL. U.S. (2,1 m^3).

western
GEAR CORPORATION

GUIDELINE TENSIONER

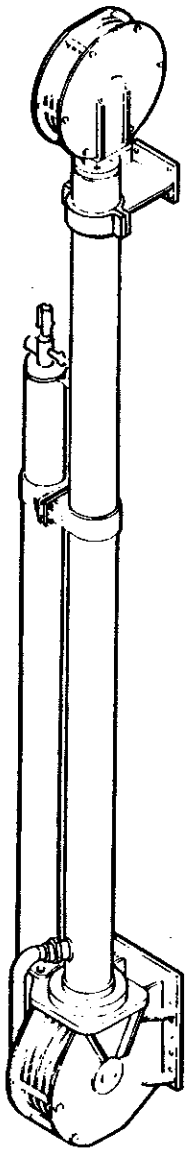

LEFT HAND
CONFIGURATION
SHOWN

- RATED LOAD = 16,000 LBS.
- HYDRAULIC SYSTEM PRESSURIZED BY AIR
- MAX. SYSTEM PRESSURE = 2,400 PSI
- MAX. ROPE TRAVEL = 40 FT.
- FINISH = ORGANIC ZINC WITH EPOXY PRIMER TIE COAT AND ALIPHATIC URETHANE TOP COAT (ORANGE)
- AVAILABLE IN RIGHT HAND AND LEFT HAND CONFIGURATIONS

western
GEAR CORPORATION

GUIDELINE TENSIONER

MODEL VCT 0750 40B5

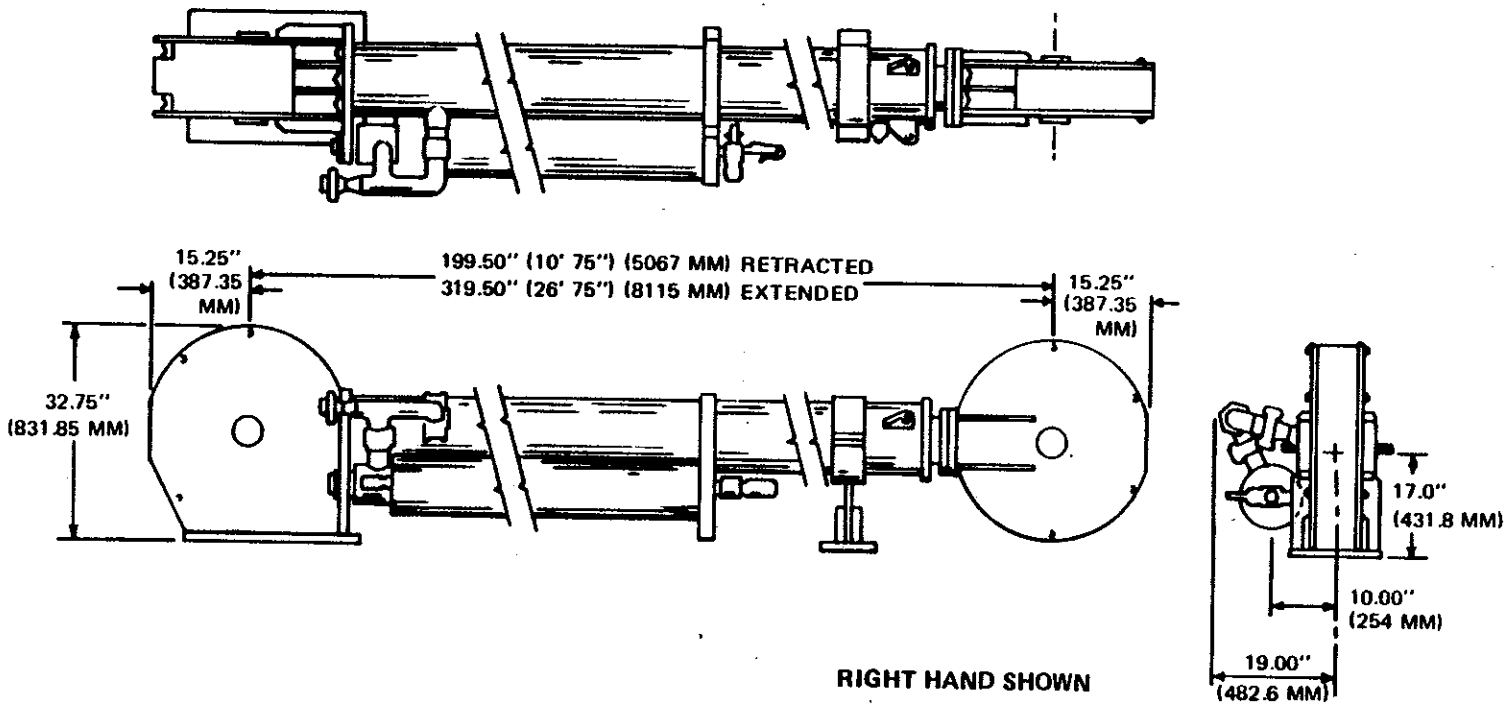

RIGHT HAND SHOWN

NOTES:

1) TENSIONER MAY BE MOUNTED HORIZONTALLY OR VERTICALLY (STROKING UPWARDS) AS SPECIFIED.
2) RECOMMENDED MOUNTING BOLTS - 1" DIA., SAE GRADE 5 TORQUE TO 525 LB-FT.
3) SECURE LOWER BLOCK TO STRUCTURE, SHIM UNDER UPPER MOUNT AS REQ'D (WHILE SUPPORTING TENSIONER WEIGHT) AND SECURE UPPER MOUNT.

western GEAR CORPORATION

AIR PRESSURE SYSTEM

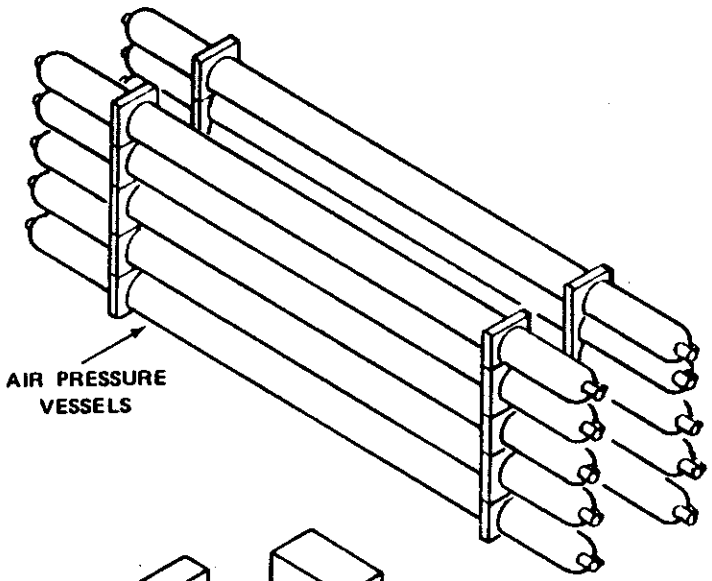

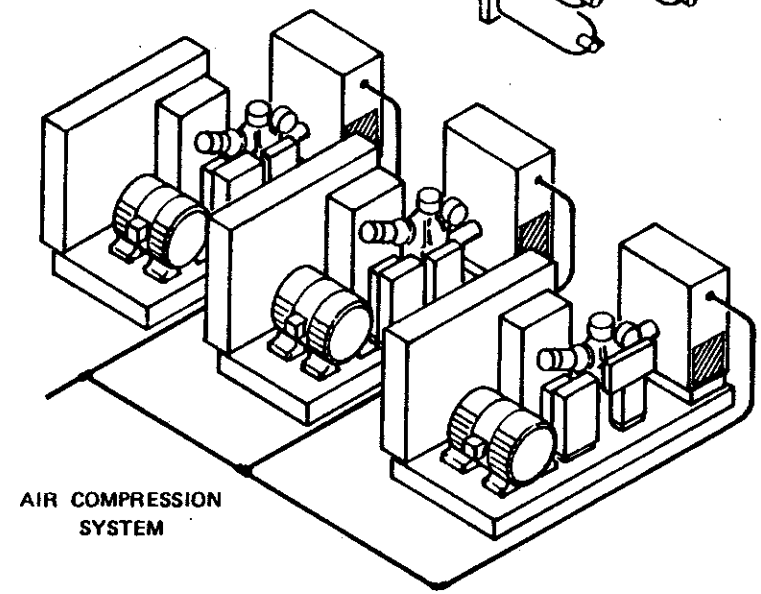

- 2,400 PSI SYSTEM
- VESSEL SIZE: 18" O.D. X 33' LONG, CONTAINS 37 CU. FT.
- VESSEL INTERIOR COATED WITH EPOXY PRIMER; EXTERIOR PAINTED WITH ORGANIC ZINC PRIMER
- WATER OF AIR COOLED COMPRESSOR/DRYER PACKAGES IN CAPACITIES AND DEW POINTS COMPATIBLE WITH SYSTEM NEEDS

western GEAR CORPORATION

CONTROL PANEL

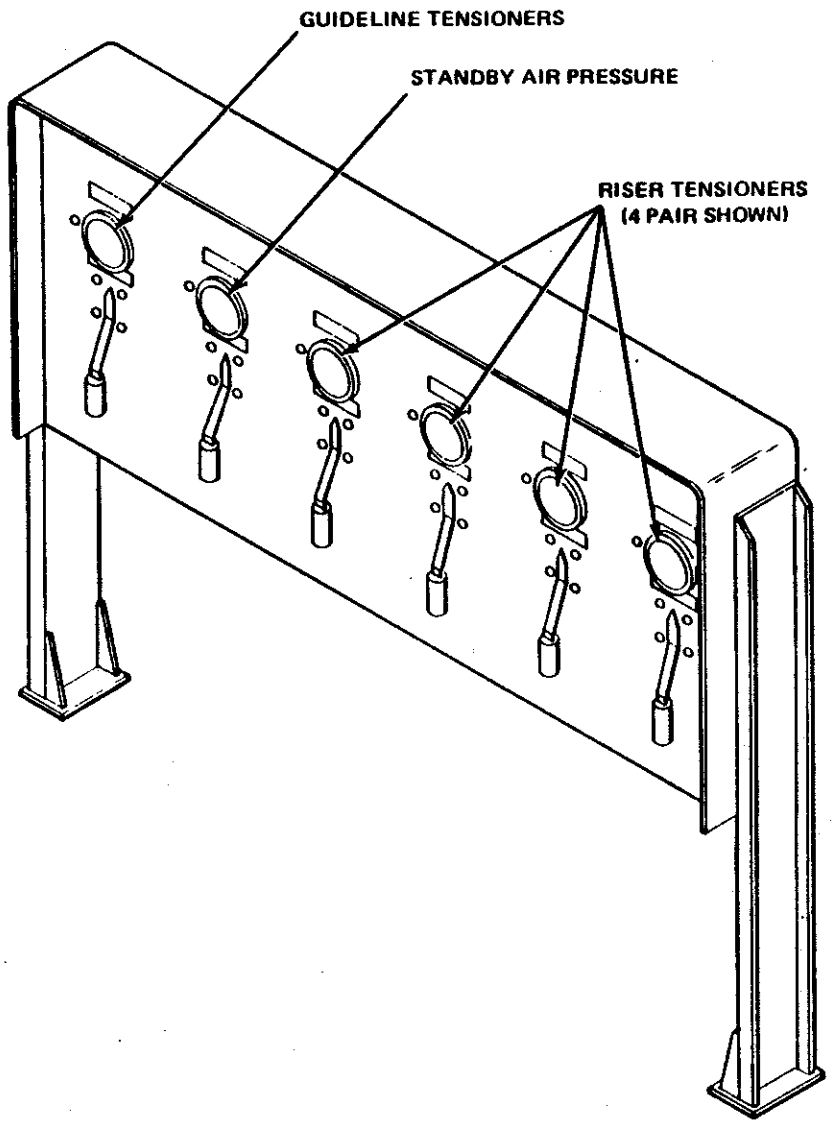

- RUGGED CONSTRUCTION
- NO ELECTRICAL CONTROLS
- ALL MANUALLY OPERATED AIR VALVES
- INTEGRAL CONTROL CONSOLE FOR RISER AND GUIDELINE TENSIONERS
- 2400 PSI SYSTEM
- LINE TENSION AND OPERATING PRESSURE ARE INDICATED FOR DIRECT READOUT

western
GEAR CORPORATION

TURN DOWN SHEAVES

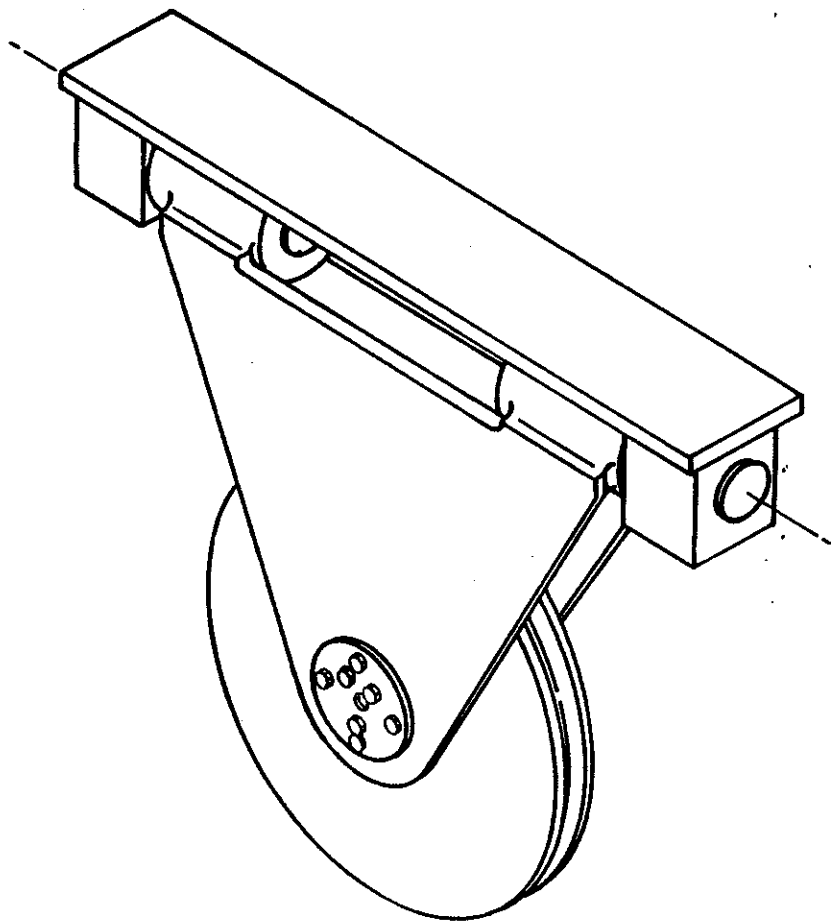

- AVAILABLE SHEAVE SIZES:

  52" DIA (RISER TENSIONER)

  28" DIA (GUIDELINE TENSIONER)

- TRUNNION MOUNTED
- ANTI-FRICTION BEARINGS WITH LUBRICANT PROVISION
- GROOVING FOR 1-3/4" AND 3/4" WIRE ROPE

High Productivity Features

western GEAR CORPORATION

REDUCED OPERATING COST

CYLINDER/PISTON-TYPE TENSIONER

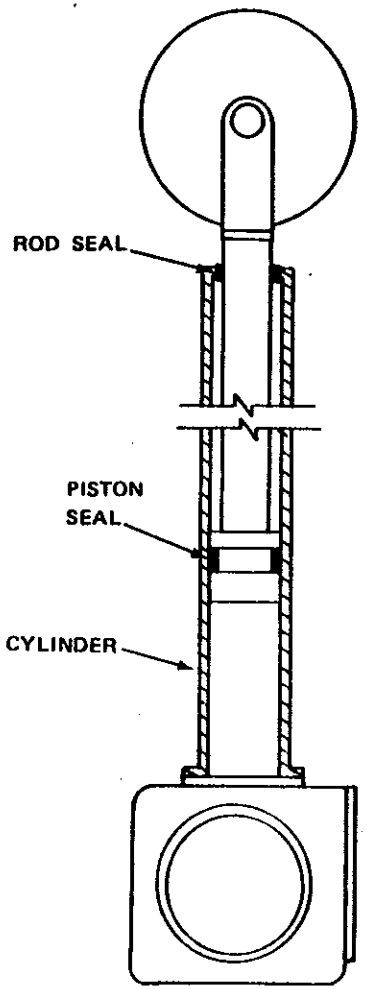

- COMPLETE DISASSEMBLY OF CYLINDER HEAD, PISTON AND ROD FROM CYLINDER REQUIRED TO REPLACE PISTON SEAL
- DISASSEMBLY OF UPPER FLANGE REQUIRED TO REPLACE ROD SEAL

WESTERN GEAR RAM-TYPE TENSIONER

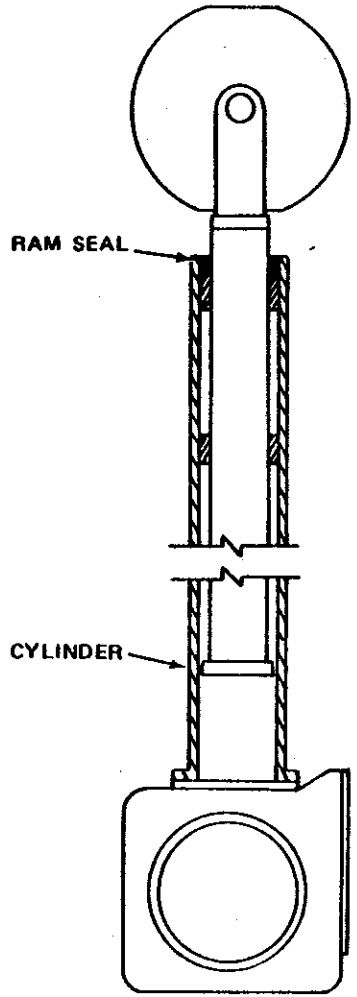

- DISASSEMBLY OF UPPER FLANGE AND REPLACEMENT OF SEAL IS ALL THAT IS REQUIRED

REAL MAINTENANCE COST SAVINGS WITH WESTERN GEAR RAM TENSIONERS

REDUCTION OF SERVICE RISK ELEMENTS

CYLINDER/PISTON-TYPE TENSIONER

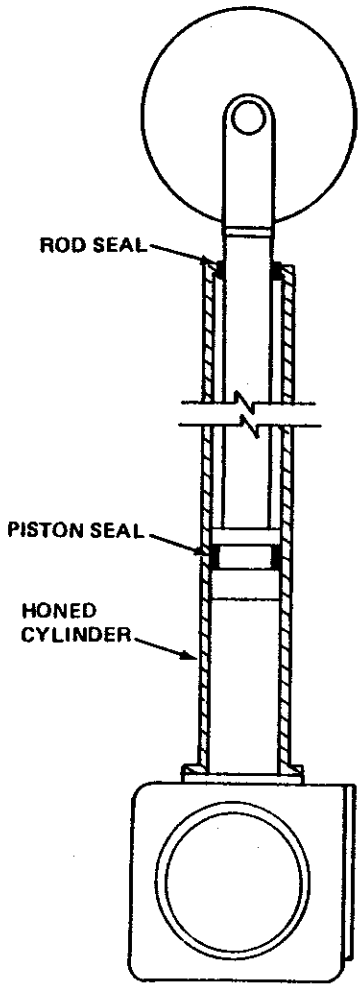

- SEAL REPLACEMENT EXPOSES THE SYSTEM TO POSSIBLE CONTAMINATION AND MECHANICAL DAMAGE TO THE CLOSE TOLERANCE HONED CYLINDER INSIDE DIAMETER AND/OR ROD OUTSIDE DIAMETER
- POSSIBILITY OF SEAL DAMAGE DURING REASSEMBLY

WESTERN GEAR RAM-TYPE TENSIONER

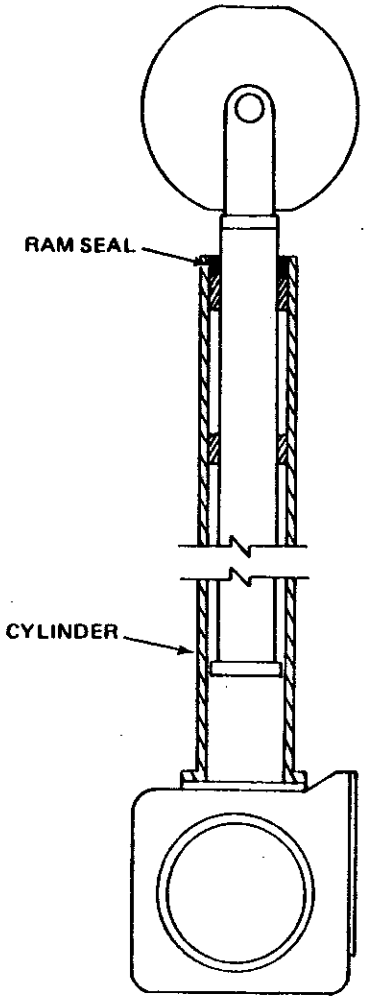

- SEAL REPLACEMENT ACCOMPLISHED WITHOUT DISASSEMBLY OF MAJOR COMPONENTS
- WIRE ROPE REMAINS IN PLACE WHILE SEAL REPLACEMENT IS ACCOMPLISHED

REDUCTION OF RISK ELEMENTS INCREASES TENSIONER LIFE

western
GEAR CORPORATION

COMPACT SIZE

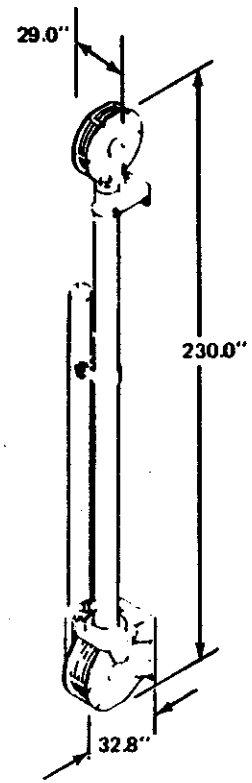

GUIDELINE TENSIONER

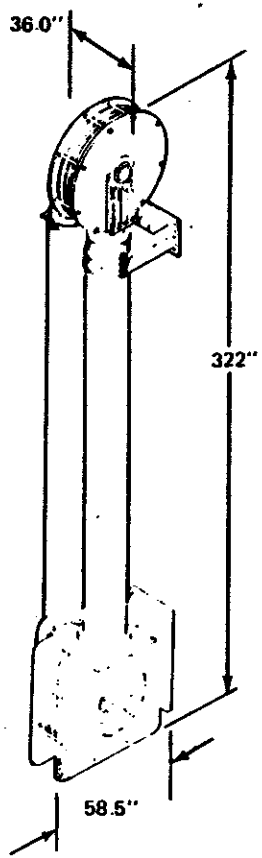

SINGLE RISER TENSIONER

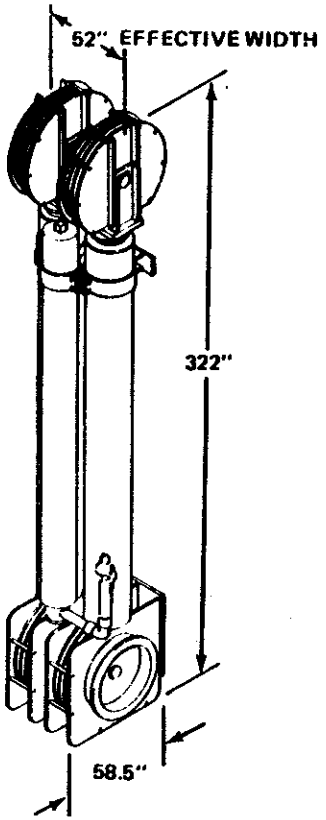

DUAL RISER TENSIONERS

COMPACT ENVELOPES OF WESTERN GEAR TENSIONERS PROVIDE MORE EFFECTIVE USE OF RIG FLOOR PERIMIETER SPACE.

western GEAR CORPORATION

SAFETY FEATURES

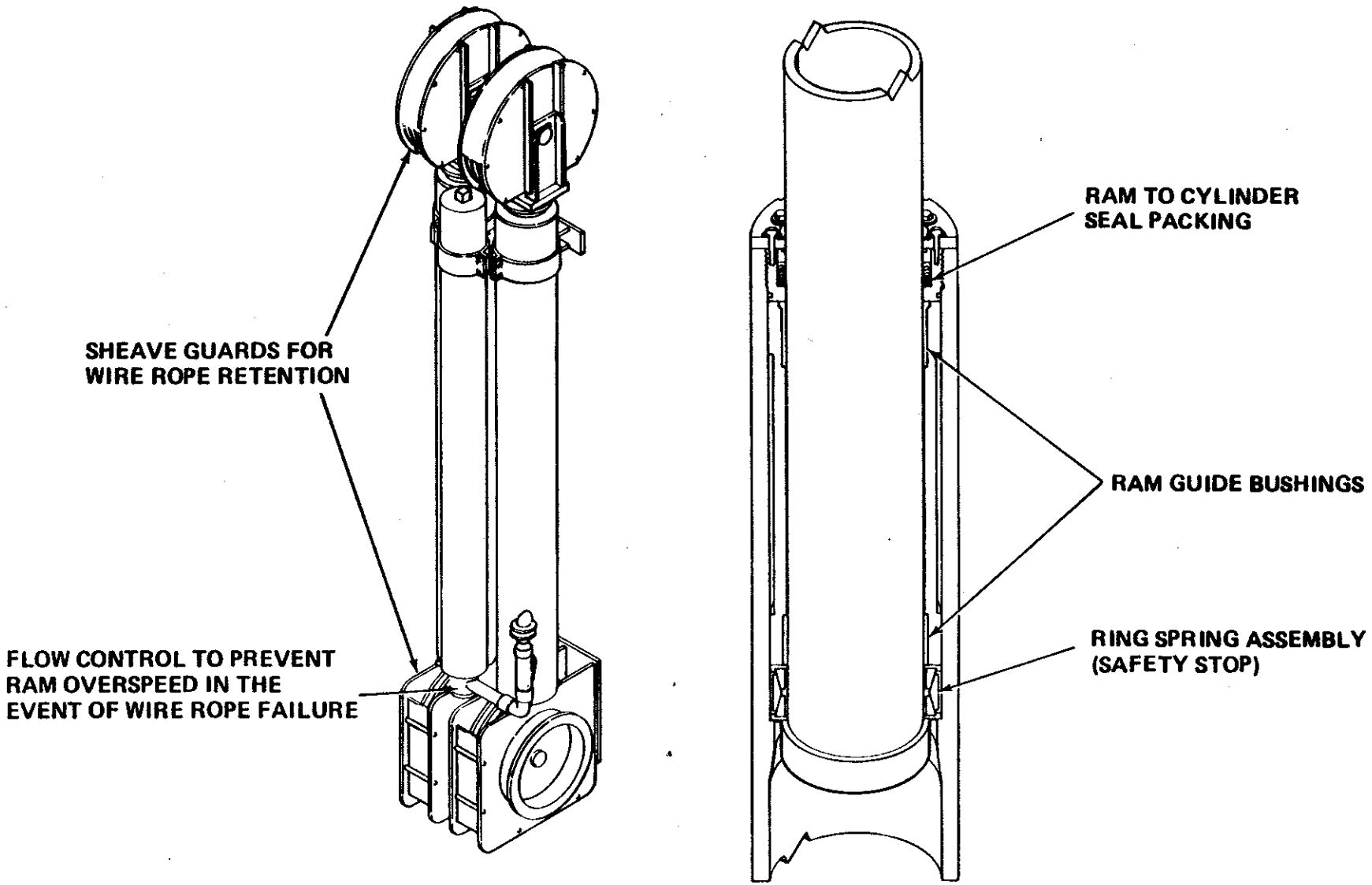

Western Gear Corporation
Domestic Representation

Los Angeles, California
2600 East Imperial Highway
Lynwood, California 90262
Telephone: (213) 636-0911

San Francisco, California
3704 Mt. Diablo Blvd
Suite 319
Lafayette, California 94549
Telephone: (415) 283-1970

Stamford, Connecticut
1010 Washington Blvd
Stamford, Connecticut 06901
Telephone: (203) 324-4148

Atlanta, Georgia
1775 The Exchange NW
Suite 130
Atlanta, Georgia 30339
Telephone: (404) 955-6333

Pittsburgh, Pennsylvania
Forest Hill Plaza
21 Yost Blvd, Suite 304
Pittsburgh, Pennsylvania 15221
Telephone: (412) 824-8516

Houston, Texas
2190 No. Loop West
Suite 301
Houston, Texas 77018
Telephone: (713) 681-3333

Seattle, Washington
2100 West Marine View Drive
Everett, Washington 98201
Telephone: (206) 259-0922

Washington, D.C.
1235 Jefferson Davis Highway
Suite 406
Arlington, Virginia 22202
Telephone: (703) 892-1673

Western Gear Corporation
International Representation

Argentina
Western Gear Corporation
Laprida 2134
Zip 1425
Buenos Aires, Argentina
Telephone: 83-7697
Telex: 390-122542 AR GESYE

Brazil
Western Gear Corporation
Av. Rio Branco, 156/1623
Rio de Janeiro, Brazil
Telephone: 262-3739
Telex: 391-021-23329 XPRJA BR

Canada
Western Gear Canada, Ltd
385 The West Mall, Suite 301
Etobicoke, Ontario M9C 1E7
Canada
Telephone: 416-671-1510
Telex: 06-968696

China
American Technology Corp
7700 San Felipe, Suite 355
Houston, Texas 77063
Telephone: (713) 974-3182
Telex: 203306

England
Western Gear (U.K.) Ltd
58 High Street
Battle
Sussex TN330AG
Telephone: 44 4246 4411
Telex: 851957561

France
Western Gear International, Inc.
76, Rue Jean-Jacques Rousseau
92700 Colombes, France
Telephone: 782-52-51
Telex: 842-630773 E WESGEAR

India
Nishi Associates
3/1308 Navjivan Society
Lamington Road
Bombay 400 008
India
Telephone: 373308
Telex: 953 0115022, 953 0116269
(Drilling Equipment)

India
Greaves Cotton & Co., Ltd
1, Dr. V.B. Gandhi Marg
Bombay, 400 023
India
Telephone: 271524
Telex: 953 011-2517
(Pipelaying Equipment)

Japan
Western Gear Corporation
26-24, Shiba 5-Chome
Minato-Ku, Tokyo 108
Telephone: 81-3-453-4382
Telex: 7068

Korea
Hanchang Co., Ltd
C.P.O. Box 6626
Rm. 202, Seoul Bldg
#3-7,1-Ka, Pil-Dong
Chung-Ku, Seoul, Korea
Telephone: 261-7901, 267-5545
Telex: 787 25664

Norway
Langesund Marin Service A.S.
P.O. Box 75
N-3971 Langesund
Norway
Telephone: 035-72300
Telex: 856 21433

Spain
Aikin Espanola LDA
Caidos Division, Azul, 16
Madrid-16
Spain
Telephone: 458 78 12
Telex: 831-23457

Smith Berger

UNDERWATER FAIRLEADERS

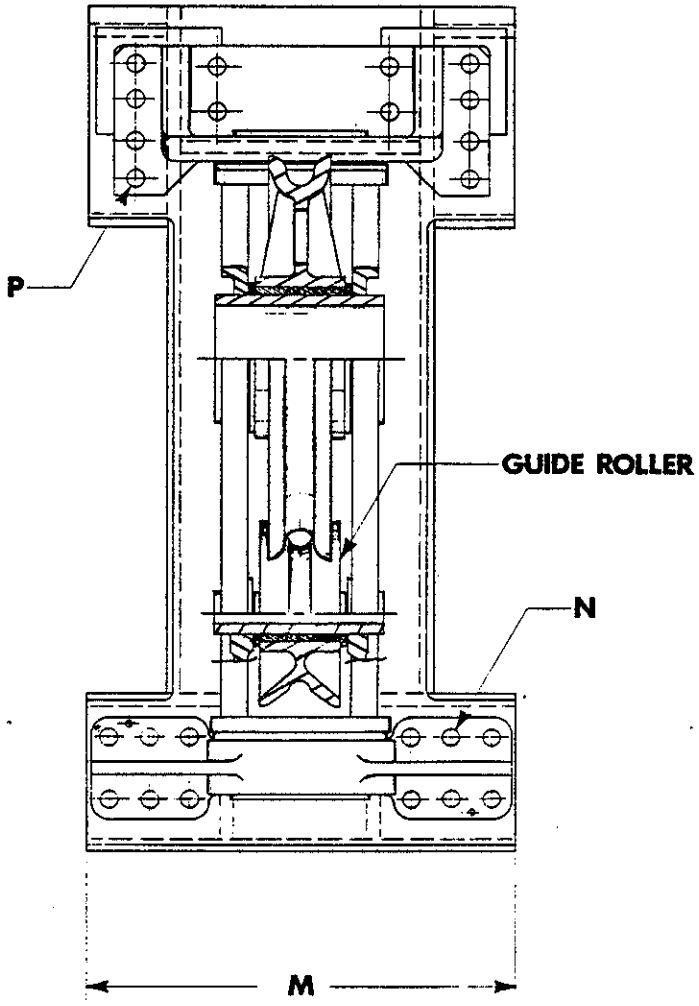

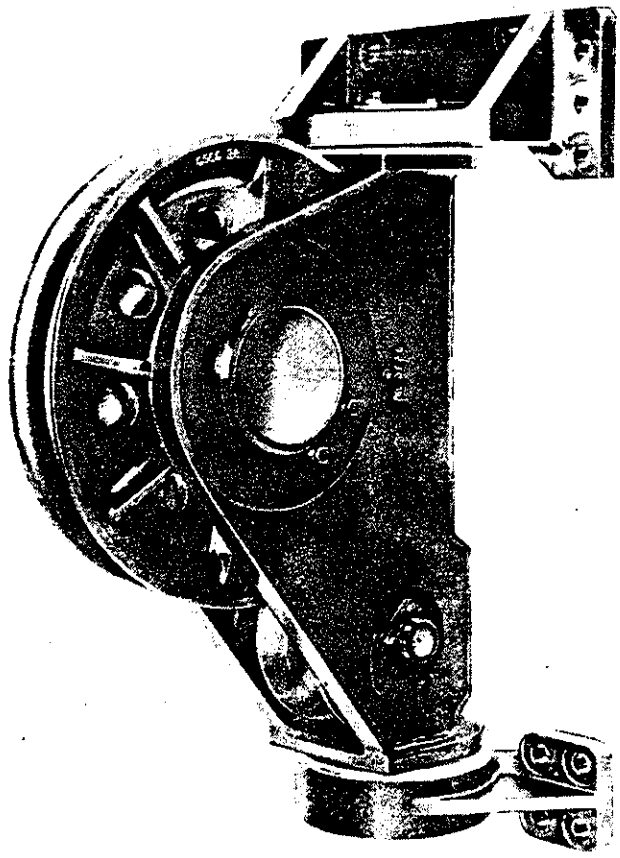

N = NO. OF HOLES IN LOWER TRUNNION

P = NO. OF HOLES IN UPPER TRUNNION

UNDERWATER FAIRLEADERS

Model Number	Unit of Measure	Sheave Dia.	Line Size	Roller Dia.	Sheave Brg.	Trun. Brg.	A	B	C	D	E
436	IN.	36	2½	18	Bronze Bushed	Bronze Bushed	87	76¾	32¾	23½	20½
	MM.	914	64	457			2210	1950	832	597	521
442	IN.	42	2	18	Bronze Bushed	Bronze Bushed	87	81	35½	25	20½
	MM.	1067	50	457			2210	2058	902	635	521
446	IN.	46	3	21	Bronze Bushed	Bronze Bushed	96	87	35¼	29	22¼
	MM.	1168	76	533			2439	2210	895	737	565
448	IN.	48	2½	24	Bronze Bushed	Bronze Bushed	100	96	40	31¼	24¾
	MM.	1219	64	610			2540	2439	1016	794	629
452	IN.	52	2½ & 3	21	Bronze Bushed	Bronze Bushed	98	90	36½	30½	23
	MM.	1321	64 & 76	533			2489	2286	927	775	584
458	IN.	58	2½ & 3	21	Bronze Bushed	Bronze Bushed	100	93	38½	32	22½
	MM.	1473	64 & 76	533			2540	2362	978	813	572
458T	IN.	58	3	21	Tapered Roller	Tapered Roller	100	96	42	32½	21½
	MM.	1473	76	533			2540	2438	1067	825	546

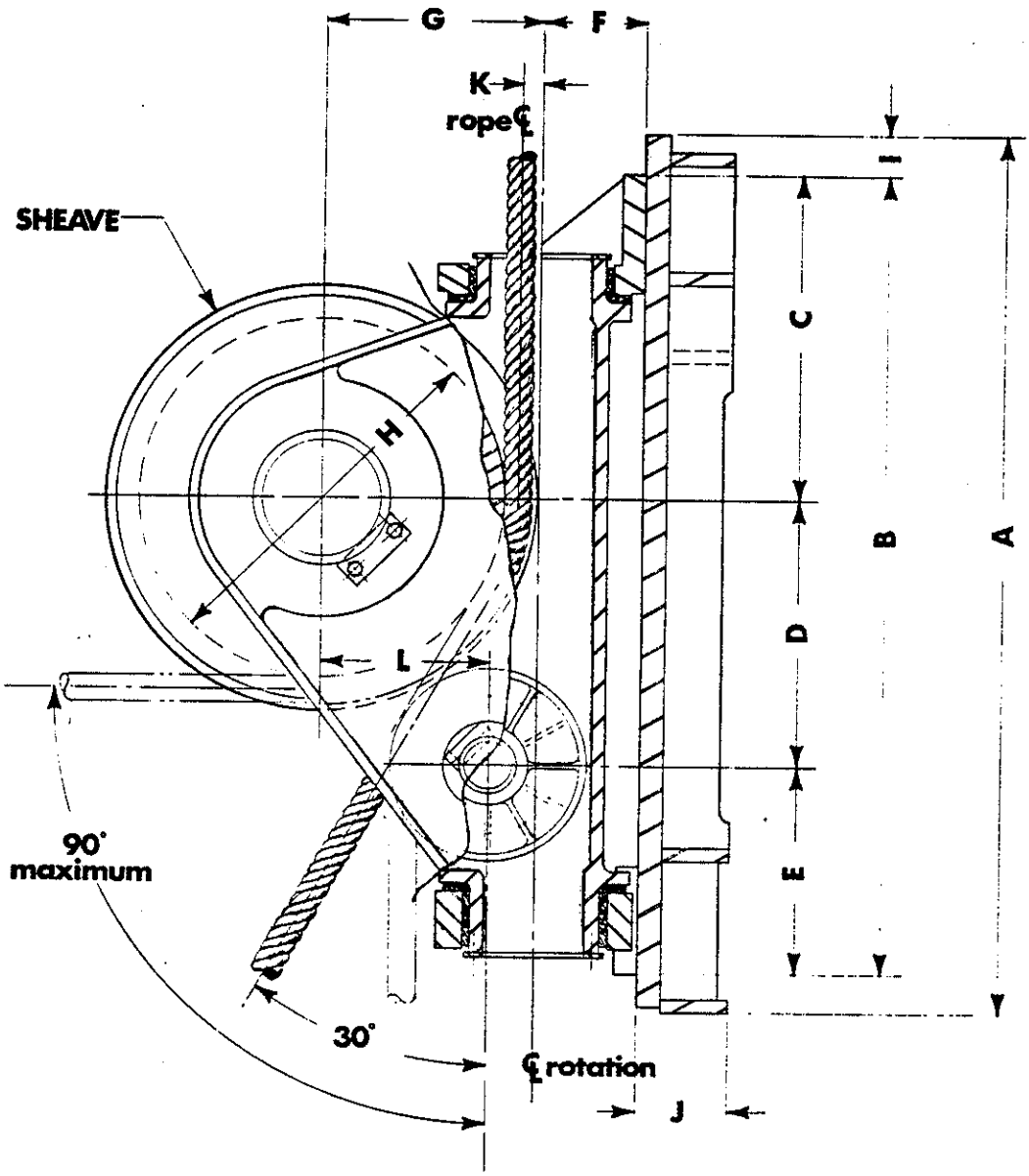

F	G	H	I	J	K	L	M	N	P
11	18	30	5	9½	1¾	14	48	8	10
279	457	762	127	241	44	356	1219	8	10
11	21	37½	2¾	9½	1½	16¾	48	8	10
279	533	953	70	241	38	425	1219	8	10
11	23	39	4½	9½	2	18	48	12	10
279	584	991	114	241	51	457	1219	12	12
11	24	42	3¼	9½	1¾	18½	48	8	10
279	610	1067	83	241	44	470	1219	8	10
11	26	48	4	9½	2	21	48	12	12
279	660	1219	102	241	51	533	1219	12	12
11	29	51	4	9½	2	24	48	12	12
279	737	1295	102	241	51	610	1219	12	12
11	29	51	3¼	9½	2	24	51	12	12
311	737	1295	83	241	51	610	1295	12	12

NOTE: For construction purposes, send for certified dimension drawings.

Engineering Innovations

BALDT

Bulletin 005

Baldt MOOR-FREE™ Phase II Rapid Release System

NEW

For Instantaneous Release of Vessel Moorings

A Permanent Self-Contained System

Baldt MOOR-FREE™ II is the latest in a series of developments that allows rig operators to free a vessel from its moorings *instantaneously*. Designed for permanent deployment, the MOOR-FREE II computer system has been improved and refined to provide increased flexibility.

An increased battery life of approximately six months and the ability to position the disconnect link anywhere in the chain length are two component refinements that were developed to make Phase II a permanent part of the active system. Designed for maximum user safety, MOOR-FREE II is a totally self-contained system, requiring no outside assistance from supply/support vessels.

The Baldt rapid release system combines state-of-the-art acoustic detonation technology with the performance-proven Baldt chain connecting link concept. Continuing research, development, and testing have resulted in a system that performs safely and reliably.

Performance Proven Technologies

Chain Connecting Link Concept

As with the original MOOR-FREE System, Baldt engineers modified the basic Baldt chain connecting link concept for MOOR-FREE II to include symmetrical caps and U-link assemblies with integrated detonating bolt assemblies for separation. Because the disconnect link has a similar configuration to the Baldt chain connecting link, it is easily installed as an integral component of the mooring system. MOOR-FREE II now permits the disconnect link to be positioned anywhere in the chain length to provide increased applications flexibility.

Acoustic Control Detonation

The latest acoustic detonation technology is used to make the MOOR-FREE II a precisely controlled, reliable, integrated system. Improvements include a microprocessor-based command transmitter with increased power output and a new two-unit acoustic transducer assembly which are used to set up, activate, and control detonation.

System Operation Chart

Temporary Deployment

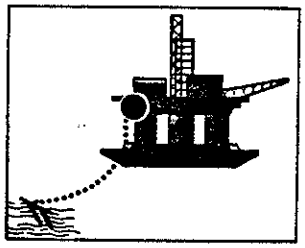

1. Disconnect system becomes part of your mooring system.

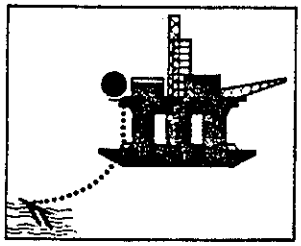

2. System is readied and passed through wildcats and fairleads.

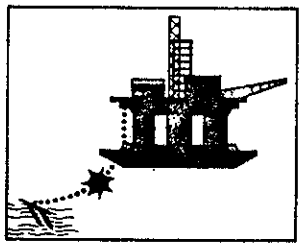

3. Danger threatens. System is activated. Mooring is released.

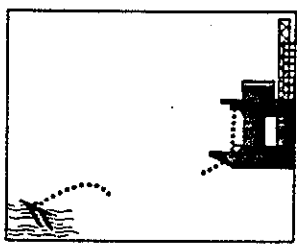

4. Rig moves away from danger.

Permanent Deployment

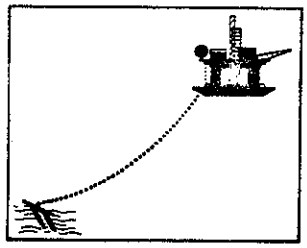

1. Disconnect system becomes part of your mooring system. System is readied and passed through wildcats and fairleads.

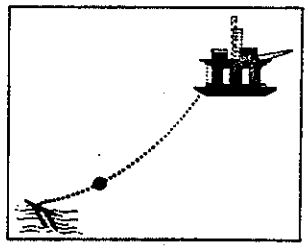

2. System is a permanent part of the active mooring lines.

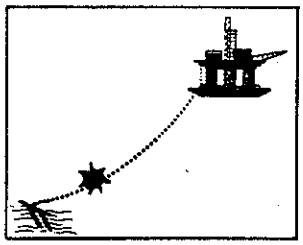

3. Danger threatens. System is activated. Mooring is released.

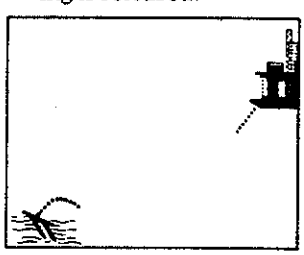

4. Rig moves away from danger.

MOOR-FREE™ II System Components

Unique Baldt Disconnect Link

This link is the central element of the system. It consists of two forged U-link sections and two forged locking caps. Designed to meet Grade 4 loads, both the U-links and caps are manufactured from a high strength ductile alloy steel that is specially heat treated to obtain a homogeneous structure. Furthermore, each component is treated with a specially developed ceramic metallic marine coating that inhibits corrosion.

The Baldt disconnect link, currently compatible with 3″ size stud link chain, now becomes a permanent part of the active mooring system. Previously, the link which was stored in the chain locker had to be pre-positioned depending on the drilling site. MOOR-FREE II now provides link positioning anywhere in length for maximum flexibility.

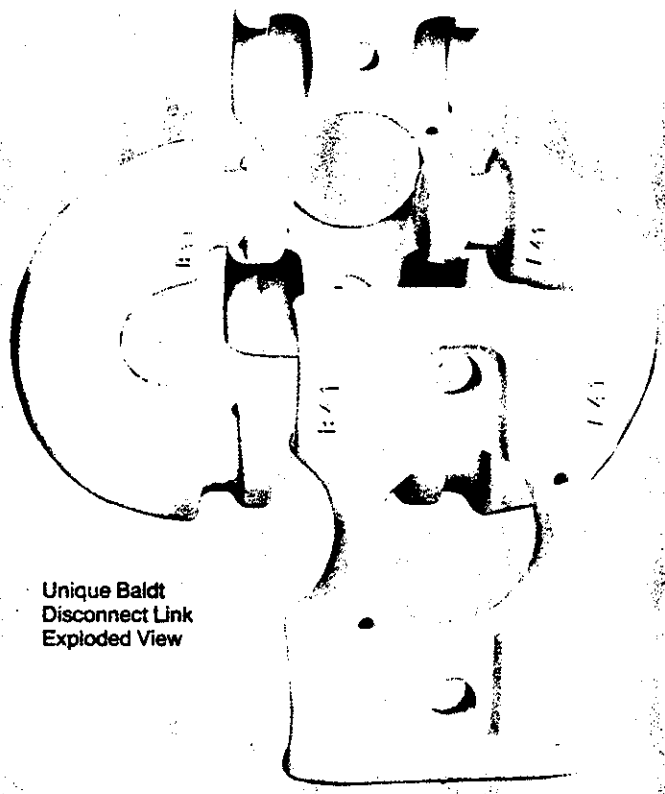

Unique Baldt Disconnect Link Exploded View

Detonating Bolt Assembly

This unit, designed to detonate and separate the disconnect link, has been improved with the development of dual detonating bolts for increased strength and fatigue life. All MOOR-FREE II acoustic components including the new long life replaceable battery are housed in a stainless steel canister designed for maximum operating depth of 2500 feet. Each detonating bolt assembly has its own unique address code that is keyed directly into the command transmitter.

For maximum safety, the explosives used are secondary RDX type that employ an Exploding Bridgewire Detonator (EBW) for detonation. These detonators require a specific energy pulse to function: they cannot be detonated by radio transmission, static charges, induced currents from low frequency (60 cycle) power lines, or heat.

Baldt engineers recommend the acoustically detonated system for most offshore applications. However, other configurations can be custom-engineered to meet special applications. These options include additional redundancy where necessary to meet legal requirements.

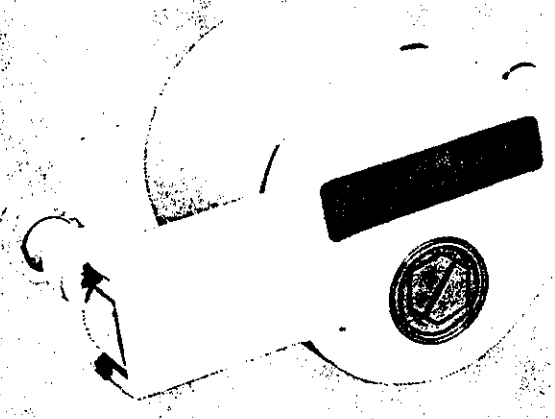

Detonating Bolt with Acoustic Receiver

Acoustic Transducer

This device receives the signal from the command transmitter and transmits it to the acoustic receiver in the detonating bolt assembly. Redesigned for MOOR-FREE II, this two-unit transducer assembly exceeds 70 percent efficiency versus 10 percent with a single transducer. This new design allows the unit to be permanently affixed below the waterline of the vessel or suspended in the water by cable. Operating at a frequency of 500-5000Hz, these omni-directional piezoelectric projector type transducers have a maximum range of 5,000 feet.

Command Transmitter

This microprocessor-controlled unit gives the operator total control of the release operation. It guides him through system set-up, testing, arming, and detonation. Information and system status is conveyed to the operator by a two-line, 16-digit, backlighted, sunlight readable liquid crystal display (LCD). This waterproofed transmitter uses either AC or DC power supply sources, and has an increased source level rating of 191 db (reference: 1 micropascal at 1 meter).

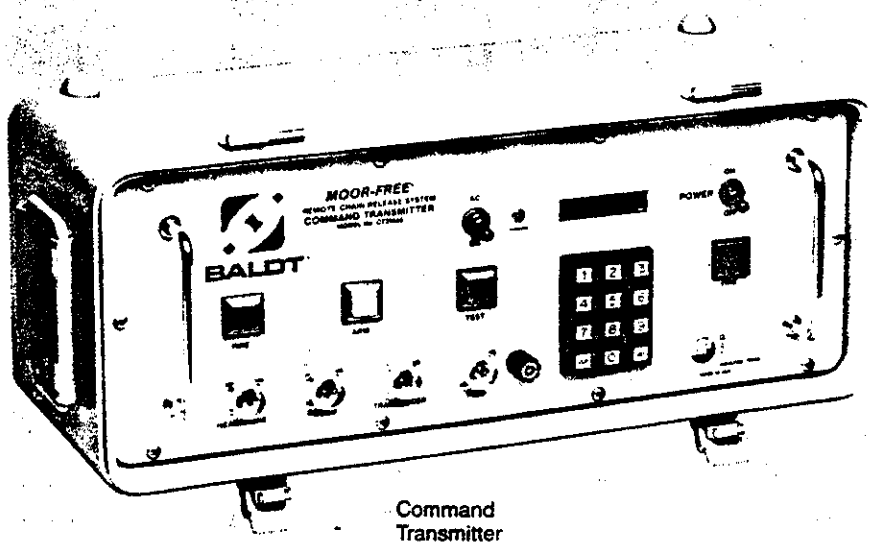

Command Transmitter

Unique Baldt
Disconnect Link
Assembled

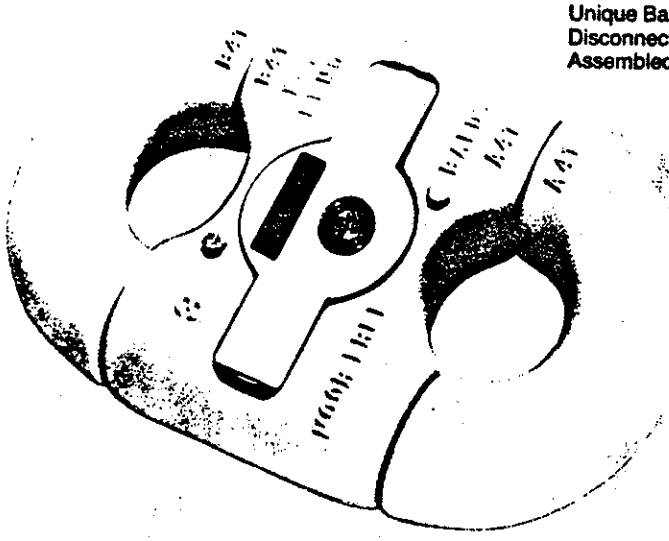

Disconnect Link is compatible
with 3" size stud-link chain

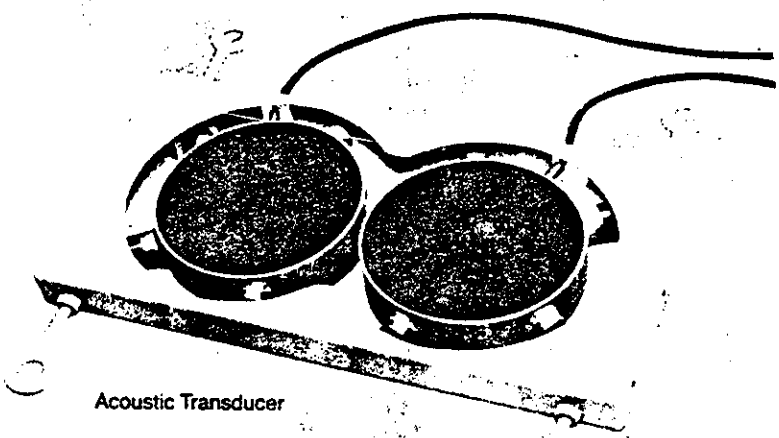

Acoustic Transducer

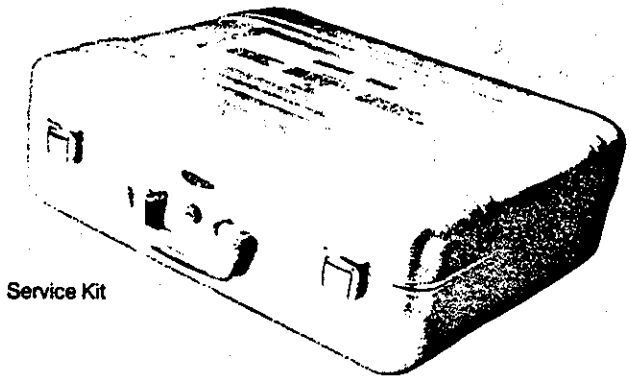

Service Kit

Service Kit

This sealed, weather-resistant metal service kit keeps all system components together and intact. It stores hex sockets, torque wrench, socket bar, and all accessories needed to activate the disconnect link.

MOOR-FREE™ II Improvements At a Glance

MOOR-FREE II components have been improved and refined to provide:

- Instantaneous release of vessel moorings
- Grade 4 compatibility
- Extended battery life of approximately six months
- Increased operating depth of 2500 feet
- Maximum flexibility with disconnect link permanently deployed anywhere in chain length
- Seventy percent plus efficiency with two-unit acoustic transducer assembly
- Increased command transmitter power output

Complete Training Program

Although the Baldt MOOR-FREE II System is designed for easy usage, training is essential for proper operation. Baldt technicians will conduct in-person training sessions with audio-visual support in strategic locations worldwide to detail operation, maintenance, and troubleshooting procedures. Thorough, straightforward operation manuals and instruction/training videotapes are included with the system.

Warranty

When a complete MOOR-FREE II System is purchased, Baldt warrants all components to be free from defects in workmanship and materials for two years from date of shipment. This warranty does not cover batteries or damage to packaging. Warranty applies only if system is installed, used and serviced according to manufacturer's instructions. Seller shall not be responsible for incidental or consequential damages.*

Inspection Services Agreement

At no additional cost to the purchaser for the first two years, Baldt will provide annual inspection of an installed MOOR-FREE II System anywhere in the world. Assuming the purchaser meets all the terms and conditions spelled out in the agreement, Baldt will then provide the customer with a new certificate of operability.*

*Complete warranty and inspection services agreement are included with each MOOR-FREE II System, and are available upon request.

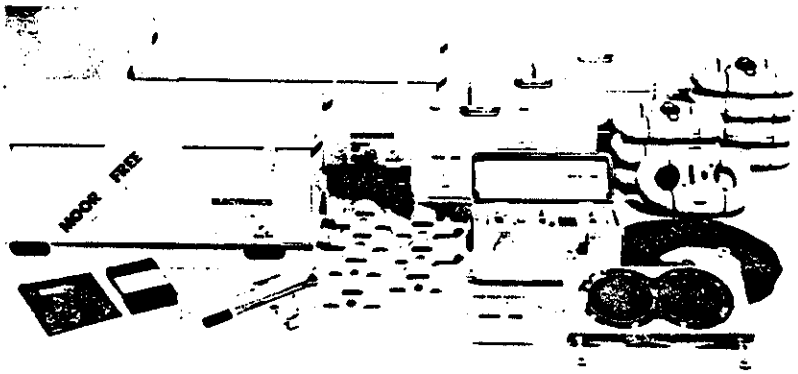

The Baldt MOOR-FREE II System.

Spare Parts included with each MOOR-FREE II System.

Basic Acoustic System for 8-Leg Mooring System

Weight: Approx. 2140 lbs.
Contents:
Disconnect Links (8 plus 2 spares)
Detonating Bolt Assemblies (8 plus 2 spares)
Acoustic Transducer Assemblies (1 plus 1 spare)
Command Transmitters (1 plus 1 spare)
Service Kit (1)
Operation Manuals (4)
Instruction/Training Videotape (1)
Inspection Services Agreement
Warranty
Shipping Containers (2)
NOTE: Links and electronic components are packaged in separate shipping containers. Each MOOR-FREE II System is unique. Components are not interchangeable and are not sold separately.

Component Specifications

Disconnect Link
Weight: Approx. 135 lbs.
Outline Dimensions: 18 5/16" × 12 3/16" × 4 3/8"
Compatibility: 3" stud-link chain
Appearance: Ceramic metallic, anti-corrosive coating
Construction: Specially heat-treated, high-strength/ductile forged alloy steel

Acoustic Transducer
Weight: Approx. 40 lbs.
Size: 2 ea. 8 5/8" × 2"
Type: Omni-directional piezoelectrical dual projector type
Construction: Coated stainless steel ring surrounding interior elements potted in flexible encapsulant and housed in a structural steel mounting bracket.
Frequency: 500-5000 Hz
Location: Suspended by a cable or permanently affixed to vessel

Command Transmitter
Weight: Approx. 40 lbs.
Size: 22" × 9½" × 13"
Power Requirements: 115 VAC/60Hz (internal battery pack)
Readout: 2-line 16-digit LCD
Battery Pack: sealed liquid cell rechargeable batteries
Features: Back-lighted, sunlight-readable LCD; 10-digit keypad

Service Kit (basic system)
Weight: Approx. 25 lbs.
Dimensions: 21¼" × 18½" × 7¾"
Contents: 1 torque wrench
2 socket bars
4 hex sockets
2 box wrenches
1 strap wrench
4 spare keeper bolts and nuts, ¾"
24 retaining bolts, ⅜" (4 spares)
2 spare connector caps
12 arming insert plugs (2 spares)
4 operation manuals

Chain Size	Weight	Proof Load	Ultimate Design Load
Baldt 3" Disconnect Link	135 lbs.	1,067,000 lbs.	1,357,000 lbs.

For more information, contact your authorized Baldt representative or Baldt corporate headquarters at the address below.

MOOR FREE™
BALDT RAPID RELEASE SYSTEM

© 1984 Baldt Inc. *Patents pending

BALDT

Moving ahead to keep you standing fast.

Baldt Incorporated
P.O. Box 350
Chester, PA 19016
215/447-5200, telex 834367

CONTRACT NO.
14-12-0001-30135

DEVELOPMENT OF AN ENGINEERING AND COST ANALYSIS OF A SHIP-MOUNTED SUBSURFACE COLLECTOR SYSTEM

FINAL REPORT

VOLUME 2 OF 2

DECEMBER 2, 1985

UNITED STATES DEPARTMENT OF THE INTERIOR
MINERALS MANAGEMENT SERVICE

TECHNOLOGY ASSESSMENT & RESEARCH PROGRAM
12203 SUNRISE VALLEY DRIVE, MAIL STOP 647
RESTON, VIRGINIA 22091

BROWN & ROOT DEVELOPMENT, INC.
P.O. BOX 1051 HOUSTON, TEXAS 77251

ENGINEERING AND COST ANALYSIS OF A SHIP-MOUNTED SUBSURFACE COLLECTOR SYSTEM

CONTRACT NO. 14-12-0001-30135

VOLUME 2 OF 2

SECTION 2.0 OF 5

LITERATURE REVIEW (TASK 1)

FINAL REPORT

0345X

SECTION	TITLE	PAGE
2.3.4	Second Subsea Containment of Oil Workshop, Oslo, 1982	2-34
2.3.5	Outcome of Oslo Workshop	2-35
2.3.6	Actual Systems Installed	2-38
2.3.7	Tne Synopses from Literature Review	2-40
2.3.8	Summaries of Plume Studies	2-42
2.3.9	Collector Model Studies	2-60
2.3.10	Subsea Collection System Concepts	2-74
2.4	New Concepts	2-100
2.5	Conclusions of Review	2-100
2.5.1	General Observations/Findings	2-100
2.5.2	Status of Technology	2-103

2.3-19	INSTALLATION OF THE DUCT (NSFI)
2.3-20	STEEL SOMBRERO OPEN BOTTOM COLLECTOR USED ON THE IXTOC 1 BLOWOUT CAMPECHE BAY, 1979
2.3-21	DIAGRAM OF THE "STEEL SOMBRERO" SYSTEM
2.3-22	OIL WELL ARRESTOR (WEST ENGR & RES.)
2.3-23	PEMEX'S BARGE SUPPORTED SOMBRERO
2.3-24	OIL COLLECTING VESSEL (BROSTRØM SHIPPING)
2.3-25	THE FLOATING TANK (COLLAR) (H. J. MAELAND)
2.3-26	COLLECTING BELL, REVISED VERSION (SI/NUI)
2.3-27	COAL OIL POINT SEEP CONTAINMENT PROJECT SEEP RECOVERY SYSTEM
2.3-28	MILGRAM'S TEST MODEL SEPARATING COLLECTOR
2.3-29	T. ROBINSON 100,000 DWT TANKER AND SUBSEA CONTAINMENT SYSTEM CONCEPT
2.3-30	PROPOSED SUBSEA CONTAINMENT SYSTEM (COOSRA/DOME)
2.3-31	T. G. STARR SEPARATING COLLECTOR
2.3-32	ATMOSPHERIC INTERVENTION ON A SUBSEA WELL HEAD USING THE TEACUP (NUTEC)
2.3-32A	INSTALLATION OF THE TEACUP FOR ATMOSPHERIC INTERVENTION
2.3-32B	INSTALLATION OF THE TEACUP FOR BLOW OUT CONTAINMENT
2.3-32C	BLOW OUT CONTAINMENT USING THE TEACUP
2.3-32D	FULL SCALE TEST OF THE TEACUP USED FOR BLOW OUT CONTAINMENT
2.3-33	LABORATORY SINGLE CONE TEST COLLECTORS (MILGRAM & BURGESS)
2.3-34	WESTERGAARD'S COLLECTION BELL WITH A SPECIAL RECEPTACLE

2.3-35	DEPLOYMENT OF WESTERGAARD'S COLLECTING BELL
TABLE 2.3-36	SUMMARY OF SELECTED PAST STUDIES
2.3-37	SCEMATIC OUTLINE OF AN UNDERWATER BLOWOUT
2.3-38	FLOW PATTERN WITHIN COLLECTOR
2.3-39	TEIGEN'S TEST MODEL CROSS-SECTION OF MODEL STRUCTURE (DIMENSIONS ARE FOR FULL SIZE UNIT)
2.3-40	TEIGEN'S TEST, EXPERIMENTAL SET UP
2.3-41	CONTAINMENT PRINCIPLES
2.3-42	EXAMPLES OF CONTAINMENT AT THE SPILL SOURCE
2.3-43	FLEXIBLE COLUMN AND POSITIONING CONCEPTS
2.3-44	PRINCIPLES OF CONTAINMENT IN PLUME END AT SOURCE
2.3-45	RISER CONCEPTS AND INSTALLATION PRINCIPLES
2.3-46	SURFACE CONTAINMENT
2.3-47	CLOSED SYSTEM AT SPILL SOURCE WITH SURFACE SEPARATION
TABLE 2.5-1	TANKER BASED FLOATING PRODUCTION SYSTEMS
2.5-2	FLOATING PRODUCTION SYSTEM
2.5-3	FLOATING PRODUCTION SYSTEM
2.5-4	FLOATING PRODUCTION SYSTEM
2.5-5	FLOATING PRODUCTION SYSTEM

2.0 LITERATURE REVIEW (TASK 1)

2.1 Literature Review Objective

The objective of the literature review was to determine the state of the art related to the studies and analyses of the characteristics of subsea wellhead blowouts with the ultimate objective aimed at developing a practical system for collecting the resulting oil spill. Specifically, it was intended to review, compile and synthesize all the data and information available in the published literature as a basis for the engineering and cost analysis of a ship-mounted subsurface collector system. With the concept of a ship-mounted subsurface blowout collector system identified as the primary subject of this study, a statement of the intended scope of work and a list of major elements of the study was prepared.

2.1.1 Elements of the Review

To direct the intent of the literature review the major elements of the project were interpreted to include the following:

1) Engineering analysis of underwater blowouts
   - o Characteristics and behaviors
   - o Analytical and experimental studies
   - o Observed phenomena (real blowouts)
   - o Feasibilities of blowout containment and collection

2) Subsurface collection of blowouts
   - o State of the art and technology
   - o Historical background
   - o Large, self-contained collection ship
   - o Subsurface collection systems
   - o Quantitative effectiveness
   - o Technical and economic comparison with existing surface collection systems

3) Operational aspects

- o Locating the blowing well
- o Deployment of the subsurface collector over the blowing well
- o Station-keeping (ship and collector)
- o Riser/collector handling
- o Overcoming fire and gas hazards
- o Disposing large quantities of gas
- o Handling, separating and disposing large quantities of water
- o Reducing quantity of water entrainment in the blowout plume
- o Lightering and transfer of collected oil
- o Emergency abandonment
- o Safety considerations and other areas of concern (as identifed previously in Section 1.4)
- o Support systems operations (diving, submersible vehicles or ROVs, survey, fire-fighting, tugs, and supply, etc.)
- o Removal of debris from the wellhead region

4) Physical subsystems and components

- o The ship and the support vessels
- o The subsurface collector, riser and the associated components
- o Process and separation facilities
- o Safety equipment
- o Handling equipment (for collector/riser, debris removal, etc.)
- o Flares and burners
- o Fire-fighting equipment
- o Special facilities (e.g., turret, derricks, moon pool, etc.)

A detailed list of the elements of the study (or a work breakdown structure) for the Task 2 study for a system development and cost analysis is given in Appendix 1.

The literature review was also divided into the following broad categories for purposes of comparison against other collection alternatives on the basis of collection efficiency and cost of operation:

1) Surface collector systems
   Although the present contract and its scope of work did not specifically require a study of the various surface collector systems, an information base was needed for the equitable comparison of the effectiveness and cost of the subsurface collection system against the existing surface collection systems. Therefore, it was by necessity that surface collection systems were included in the literature review. No new concepts of this type of collection system were studied.

2) Subsurface collector systems
   The major effort of the study was intended for and applied to this generic type of system. While both existing and historical systems were to be included in this study effort, no existing or "off the shelf" systems of this type were identified.

3) New Concepts
   Any new ideas or designs dealing with subsurface collection were placed in this category.

2.1.2 Literature Sources

The references provided by the Minerals Management Services (MMS) with the scope of work (SOW) were the most informative. They were also a source for many other publications. In order

to avail as many publications as practical dealing with subsea blowouts, its containment/collection, and surface collection technology, the following sources were used. The number after each source indictes the number of papers or publications received from that source.

Listing Sources

1. Through Brown and Root on-line Data Base Linkage
   - o NTIS Data Base 395
   - o Compendex Data Base 254
   - o Life Science Collection Data Base (Dispersants, Absorbants, Booms, and Skimmers, 1978-83) 112
   - o BHRA Fluid Engineering Data Base (Oil Spill Removal Techniques and Equipment, 1973-84) 103

2. Halliburton Services 50+

3. Others
   - o Oceanic Abstracts
   - o Engineering Index Data Base
   - o API Data Base
   - o Information Retrieval LTD Data Base

   (Most of the listings from these sources were already included in the first and second sources)

4. Environment Canada 13,500+

All the listings received were scrutinized for pertinence and duplication. Then, the most pertinent publications were ordered for the detailed review.

Publication Sources

1.	Minerals Management Service	2
2.	Environment Canada	40
3.	Dr. J. H. Milgram	32
4.	Dr. D. R. Topham	4
5.	Dr. R. D. Rowe	2
6.	Veritas Technical Services	1
7.	Inhouse and other sources	75+
8.	Local Libraries	8

All of the papers and publications reviewed are listed in the "References" section of this report.

2.1.3 Historical Background

The literature review indicated that the studies related to blowout control, containment and collection are relatively new undertakings in comparison to the period of offshore drilling and production of hydrocarbons. The surface collection technology had its beginning primarily in response to the surface spillage of oils and chemicals resulting from damaged

tankers or pipelines. During the past 10-15 years major strides have been made in this area. Comprehensive review of the details on this subject are out of the scope of this study. However, a brief synopsis of the present state-of-the-art is included in this report (Section 2.2).

The research and technology development efforts in the field of subsurface blowout collection and/or containment is relatively new. Although a U.S. patent (No. 1,520,288) was granted as early as December 1924 on a device invented for extinguishing gas well fires on land, it was only in early 1970's when a limited effort appears to have been started in the area of subsea collection. Furthermore, the early studies and inventions were directed towards systems for recovering and storing fluids emanating from pipeline leaks or natural seepage from seabed, rather than blowouts, as evidenced by a number of patents granted between 1966 and 1972. The Table 2.3-1 lists some of the patents related to subsurface collectors. Several of these prior patented designs are shown in Appendix 3.

Statistically, there were 55 offshore blowouts [42]* during the period of 1956 to 1970, including 24 on the US OCS [71], but it was the 1969 blowout in the Santa Barbara Channel that seemed to have given an impetus to the industry to develop means of coping with underwater blowouts. Then, in 1977, the blowout at the Bravo platform in the North Sea provided an infusion that reached its climax during and after the Ixtoc I blowout in the Bay of Campeche (Gulf of Mexico). There was hectic activity during 1979 to 1982 among the researchers, regulatory agencies and the oil industries in the U.S.A., Canada and Norway to find the answer to tackle with such episodes. The first subsea containment of oil workshop held in Toronto in 1981 was a major

*The numbers in [] refer to the References listed in the "Reference" section of the Report.

step in that direction. What was accomplished during this period will be discussed later in Section 2.3. It is interesting to note that all major activities in this area appear to have tapered off since 1983 (following the Subsea Containment of Oil Workshop held in Oslo in 1982).

This study, sponsored by the Minerals Managerment Services, is the first major undertaking of practical significance; and from all indications, it is the only study of its kind currently being undertaken in the free world.

2.1.4 Organizations Addressing the Problem

As stated earlier, the U.S.A., Canada and Norway are the only nations that are known to have been involved in studies, research and development aimed at combating offshore oil spills and subsea blowouts. Considerable effort has been devoted by the oil industries, regulatory agencies, academic/research institutions, and engineering/ construction/ manufacturing/service companies in developing spill clean-up technology. The advancements made in the U.S.A. and Canada are impressive. But, in the area of subsea blowouts and its collection, the effort has been comparatively small. The organizations, institutions and individuals that have been, and continue to be active to some extent in this field are as follows:

Norway leads the team with at least twenty-one organizations having participated in some segment of the blowout collection study. They are listed here for ready reference.

PFO	- Oil Pollution Control R and D Program
Statoil	- Norwegian State Oil Company
NIFO	- Norwegian Industry Association for Operating Companies
DnV	- Det norske Veritas
NPD	- Norwegian Petroleum Directorate

Scandpower A/S

NTH - Norwegian Institute of Technology

IFAG - Division of Aero Gas Dynamics at NTH

SI - Central Institute for Industrial Research

SINTEF - The Foundation of Scientific and Industrial Research at NTH

NTNF - Royal Norwegian Council for Scientific Industrial Research

NHL - Norwegian Hydrodynamic Laboratories

NSFI - The Ship Research Institute of Norway

NUTEC - Norwegian Underwater Technology Center

STF - Norwegian State Pollution Control Authority

OTTER Group - Offshore Technology Testing and Research Group (Subsidiary of SINTEF, NSFI and NHL)

NOU - University of Norway, Oslo

A/S Bergens Mekaniske Verksteder

Norwegian Contractors

NUI - Norwegian Underwater Institute

Brostrøm Shipping Co.

The contributions made by these organizations are summarized in Section 2.3.

In Canada, the Environment Canada - the Environmental Emergencies Technology Division of Environmental Protection Services (EPS) has been most active in oil spill control. Other organizations that have sponsored, financed or carried out the subject studies include:

COOSRA - Canadian Offshore Oil Spill Response Association.

Dome Petroleum

C-Core

Canmar

Energetex Engineering

Can Ocean Resources

Institute of Ocean Sciences, Sidney, B.C.
(Dr. D. R. Topham and associates)

University of Calgary
(Dr. R. D. Rowe, and colleagues)
University of Toronto (Dr. D. Mackay)
DIAND (Les Terrasses de la Chaudiere)
Lockheed Petroleum Services Ltd (B.C.)
Neotechnology Consultants, Ltd
German and Milne
Arctic Sciences Ltd, Sidney, B.C.

The organizations involved in the studies and/or development of the technology for only surface collection or cleanup of oil spills are not listed here.

Domestically, the MMS has been the chief sponsor of the studies related to the problem of subsea blowouts. In the surface cleanup technology development, the USCG and its OHMSETT facilities have contributed immensely.

The Oil and Hazardous Materials Simulated Environmental Test Tank (OHMSETT) facility is located in Leanardo, New Jersey, and is jointly supported by the U.S. Navy, U.S. Coast Guard, Environmental Protection Service (Canada), the Environmental Protection Agency, and the Minerals Management Service (MMS). Further, these Agencies are represented on the OHMSETT Interagency Technical Committee (OITC) which governs the conduct of the OHMSETT operations. The OHMSETT tank is a 600-foot long outdoor system capable of generating towed currents and limited sea states. It is unique in its capability and has been the only routine source for testing oilspill skimmers and small booms in the presence of oil.

The OITC has decided upon a phased approach (a 5-year plan) for equipment and technique performance evaluation in OCS conditions. This has been necessitated by the cost of evaluating performance in OCS conditions and delays in obtaining

necessary permits for large intentional oil spills. For OCS booms and skimmers, Phase I involved OHMSETT tank testing (most of this has been completed). Phase II involved deployment on the OCS in accordance with a rigorous instrumented and cost effective test protocol. This deployment would last until the exposure variables were satisfied and performance had been measured. Phase II involves assessment of the equipment capability for seakeeping and durability and has been successful completed for two booms in OCS conditions and is planned to begin in FY 1988. Phase III involves exposure of the equipment under OCS conditions to an intentional oil spill.

On sponsorships from MMS and EPS (Canada) as well as on other research grants, Dr. J. H. Milgram and colleagues at the Massachusetts Institute of Technology, Ocean Engineering Division, have done most of the studies related to subsea blowouts and the resulting oil spills. Other organizations, such as Exxon Production and Research and Union Oil Co., have studied subsea collector concepts; and a number of individuals came up with their ideas during the heat of the Ixtoc I blowout (see Table 2.3.1). An analysis, dealing with the wellbore and atmospheric (near-surface) hydraulics of a blown-out oil well, by A.R. Clark et al of Arco Oil and Gas Co. [58], was found to be the only other publication in the literature having even a remote connection with underwater blowouts.

Brown and Root, Inc. played a significant role in the world's first and the only real attempt to date towards the subsea collection of the oil discharged from the Ixtoc I blowout. Subsequently, in 1981, Brown and Root, Inc. also designed the seepage recovery system for ARCO Oil and Gas Co. which will be discussed later. Earlier, in 1969-70, a plastic canopy had been installed by Union Oil Co. in the Santa Barbara Channel for subsea seepage collection.

No other work or pertinent references of U.S. origin were found in the literature.

2.2 Surface Collector System

2.2.1 Offshore Spill Cleanup

Offshore oil spill cleanup is made difficult by the interaction of the spilled oil with the environment. Waves, wind, and current modify an oil slick by dispersing oil in the water column, breaking up the slick into patches, and weathering the oil so that it is more dense and much more viscous.

Successful offshore cleanup depends on the timeliness of response. The longer a spill remains on the water, the more difficult the cleanup becomes. All oil spill response techniques in use today require the oil be floating at the sea's surface. There are two systems available, the net boom and the net sock collection systems, that are based upon towing a net through the water. the net is constructed of two layers of 1-2 mm fabric mesh. However, there is skepticism that the flow regime caused by towing a fine meshed net such as this through the water would differ significantly from the flow around a solid skirted boom. The net boom was designed for collection of tar balls, not subsurface oil. When used with liquid oil, it is recommended that a non-porous skirt be used with the net. In this mode, the net would perform identically to the traditionally designed boom.

As spilled oil becomes more dense due to evaporation of the light fractions and is exposed to wave energy, the oil begins to mix into the water column. Also, wave energy assists in the formation of a water-in-oil emulsion. Most crude oils and sea water contain natural emulsifiers that promote emulsion formation. These emulsions, descriptively known as "chocolate mousse", hamper spill cleanup in two ways. First, the emulsions

can be several orders of magnitude more viscous than the original oil. This causes difficulties in pumping the recovered fluid. The viscosity can be such that the emulsion begins to resemble a solid and will not flow into a cleanup device. Secondly, the emulsions may consist of up to 80 percent water. This can effectively magnify the volume of fluid to be cleaned up by a factor of five.

Oil spills spread on the water surface due to gravitational and surface tension effects as well as transport by wind and current. For example, a 30,000 bbl spill could cover over 100 sq. km after 24 hours. In the case of a subsea blowout, the blowout plume spreads as it rises to the surface. Researchers theorize that the plume diameter at the surface may be from 16-40 percent of the water depth. The presence of midwater currents could act to separate the oil phase from the gas phase and would cause the slick to cover a much larger area as it surfaces. If wind and current has broken the slick up into patches, the spill could cover over 1000 sq km. The more timely the response, the less area that will need to be covered during an oil recovery operation.

2.2.2 Spill Response Techniques

There are two major techniques for offshore oil spill response: 1) use of skimmers to mechanically remove the oil and 2) use of dispersants to chemically alter the oil's apparent surface tension to make it more readily disperse in the water column.

Skimmers

Skimmers operate on a variety of principles. Large-scale, offshore systems usually operate on the weir or the oleophilic surface principle. Skimmers generally operate at a tow speed of less than two knots. In order to increase the area covered, offshore skimmers are usually designed to operate with an oil containment boom. The boom is used to increase the sweep width of the system, concentrating the oil into the skimmer.

Two examples of this type of system are the U.S. Coast Guard Skimming Barrier (OWOCRS) and British Petroleum's Integral Weir Boom. Both of these systems have oil collection weirs built into the concentration boom. These systems may be held downstream of a spill or slowly towed through a slick, maintaining a sweep width of about 100 meters. At a 1 knot tow speed, such a device covers about 2 km^2 in a 10 hour day. (Oil spill recovery operations are usually halted at night).

Performance of offshore skimmers is mainly limited by three items:

a. Area coverage rate - as shown above, a single skimmer/boom combination may cover less than 2 percent of the area polluted by a large spill per day. Since the boom is not presently capable of retaining oil at tow speeds greater than about 1 knot, the coverage rate can only be improved by increasing the sweep width. However, boom performance decreases as the length of boom is increased because the additional towing tension degrades the boom's conformance to wave action. Operating a boom longer than about 650m is not considered practical for this reason. A 650m boom length typically corresponds to a 325m sweep width. Such a length of boom is difficult to position effectively in the open sea for long periods of time. Since a blowout plume is likely to meander, constant repositioning would be required.

   It is not likely that future boom designs will be able to operate efficiently above 1 1/4 knot speed relative to the water surface.

b. Pumping system - most offshore skimmers are not capable of pumping viscous oil at a high rate. For example, the pumping system used on the Coast Guard Skimming Barrier

(OWOCRS) can pump a maximum 24 psi head [104]. The pumps in the BP system are designed for a 10 psi head [105]. If an (OWOCRS) were recovering a 5000 cst fluid and transferring it to a barge 65m away, then the maximum flow rate would be less than 115 gpm.

Technology currently exists to improve the viscous fluid capability of skimmers. Pumping systems should be sized to be able to transfer fluid as fast as it is encountered.

c. Weather effects - performance of all offshore skimming systems begin to deteriorate in wind driven seas of 1 m in height. Wave action mechanically disperses the oil and causes water to be recovered with the oil still left on the surface. Operation of offshore systems is usually halted as wind driven seas rise beyond 2 m.

Most open sea skimmers are towed by vessels-of-convenience, usually offshore supply vessels. Plans must be made for obtaining these vessels on short notice. In a frontier exploration area, where suitable vessels are unavailable, it may be necessary to charter supply vessels on full time standby basis to use for dedicated oil spill response.

Most skimmers and support vessels have limited recovered oil onboard storage. Thus it is necessary to have arrangements for short-notice charter of barges for transporting recovered oil to shore. During the Ixtoc-1 spill a shortage of barges caused a halt in the spill recovery operations.

Dispersants

An alternative to mechanical recovery of an oil slick is to chemically treat the oil with a dispersant. Dispersants alter, the apparent surface tension of the oil, allowing outside turbulence to create small, stable droplets. Once mixed into

the water column, the droplets rise very slowly due to their small size: a small droplet has an increased drag relative to bouyant force. Dispersants are considered for use when the dispersed oil will have a lesser impact than the undispersed oil.

While the treated oil is not removed from the environment, dispersants enhance natural decomposition of the oil due to the extraordinary increase in surface area and thus significantly lower the concentration of the oil. Dispersants may also be used to alter the trajectory of an oil slick, for example, preventing the slick from making landfall.

Offshore, dispersants are applied from a cargo plane or a vessel. Both of these methods can treat a large area. For example, one DC-6 aircraft can cover about 15 sq km [106] in a day. Since dispersants must be applied to the oil phase, large slicks that have broken into patches or windrows may be difficult to effectively treat from the air. It is recommended to use a spotter plane to direct the spraying operation.

Little data exists regarding actual effectiveness of dispersant treatment of major offshore spills. It is known, however, that dispersants lose effectiveness as oil weathers. Also, dispersant effectiveness is influenced by wave action because dispersant cannot be applied to wave dispersed oil. Dispersable slicks have a limited 'window' for dispersion namely, after the slick has thinned to a treatable thickness and before too much weathering has taken place.

The current regulatory climate towards dispersants has in the past presented the largest logistic hurdle for their use. Approval to use dispersants, if and when it was to be granted, has taken several days. In order to relax the problem, the Environmental Protection Agency and the U.S. Coast Guard are actively working with coastal states, local governments and

potentially affected publics to seek prior approval for the rapid use of disperants. Since dispersants work best on fresh oil, the delay penalizes the effectiveness of treatment.

Obtaining a continuous supply of dispersant is not a problem if a stockpile sufficient for the first several days operation is on hand. Dispersant manufacturers can gear up to provide a constant supply of dispersant given several days notice [107].

Most surface spray systems are of the vessel-of-convenience type and may be readily placed into operation upon chartering a suitable vessel. Dedicated dispersant spray aircraft are available for charter and can be on-scene within 24 hours in the United States.

Spraying operations require a shore base as close to the spill site as possible. Transit time between the spill and base must be minimized to increase the time available for spraying. In aerial spraying oprations, an adequate supply of aviation fuel must be ensured, it is not unusual to use 6000 gallons per day.

2.2.3 Other Concepts - Burning

During the Ixtoc I blowout, PEMEX officials estimated that 58 percent of the oil spilled either burned at the boil zone or evaporated. For crude oil to burn on the water, it must possess sufficient thickness to sustain combustion. Depending on the compositon of the oil, a slick must be 1-5 mm thick to create a volume to surface area ratio such that the sea does not absorb too much heat.

In order to increase the percentange of oil that is burned, the oil slick must be restrained from spreading. Encircling an offshore blowout with a boom would not be practical due to the length required. A boom could be held in a catenary downstream

of the blowout. There are several fire-resistant booms in the advanced stage of development that may prove useful for this technique.

Burning has some disadvantages. First the pollution is not being removed but is being transferred from one environment to another. Also, partly combusted oil that escapes the concentration boom is tar-like and much more difficult to handle.

2.2.4 Potential Improvements

Oil spill skimming and dispersing technology may be thought of as being in the mature stage of the learning curve, that is, significant improvements will require increasing levels of effort. However, existing technology may be better utlized in current equipment. An example mentioned earlier, skimmer pumping subsystems can be improved to handle high viscosities and flow rates. The ruggedness and reliability of equipment can also be improved upon.

Logistic preparations have been a major weakness during past spills. Cleanup efforts are more successful for fresh, thick oil than on a weathered emulsion that has spread to cover an immense area. Besides insuring that adequate equipment is stockpiled, support vessels and storage tankage must be readily available.

2.2.5 Onshore Cleanup

Once an oil slick comes ashore, cleanup of the impacted beach requires a very labor-intensive effort. Cleanup usually consists of removal and disposal of the contaminated substrate. Once a section of beach has been cleaned, it is subject to recontamination from oil sunken in the subtidal zone, longshore transport of oil from adjacent contaminated beaches, leaching, and stranding of additional offshore slicks. This makes it

difficult to completely clean a shoreline, and increases the environmental damage caused by the cleanup operation itself. Some sensitive areas, e.g. mangrove stands, are not recommended for cleanup as the physical distrubance of the cleaning operations will add to the damage rather than lessen it.

2.2.6 Historic Spill Cleanup Results

Offshore spill cleanup has not been very successful to date. At the Bravo blowout in the North Sea, offshore skimming was estimated to have recovered only 4.5 percent [108], of the oil spilled. The Ixtoc 1 spill had similar results; only about 3.4 percent of the oil was skimmed. A large dispersant spraying operation was mounted to treat the 30 percent of the spill that remained on the water after allowing for burning, evaporation, and collection. While the effectiveness of the dispersant was not well documented, it is obvious that a significant amount of oil remained untreated as it later stranded on the shores of Texas and Mexico.

Two recent, large spills offshore the United States involved tanker accidents. The tanker Alvenus grounded 11 miles southeast of Cameron, Louisiana, on July 30, 1984, releasing about 45,000 barrels of crude oil. Despite summer temperatures, the oil was very viscous appearing to be "practically asphalt." Dispersant usage was thus ruled out. The Coast Guard Gulf Strike Team responded to the incident and deployed two skimming barriers. The two barriers recovered only 3,150 gallons of oil. The skimming operations were ineffective because the skimming boom pumping system has insufficient capability for pumping viscous fluids and because logistic problems were encountered in obtaining barges. The slick remained at sea less than seven days before coming ashore at Galveston, Texas.

The second accident occured when the tanker Puerto Rican was damaged by explosions on October 31, 1984, offshore San Francisco, California. On November 3, twenty foot seas caused

the tanker to break in two, releasing an estimated 5,000 barrels of lube oil. Dispersant use was approved on the same day, and 2,000 gallons of dispersant were sprayed from a DC-4 airplane. The dispersant appeared to be very effective. Some oil washed ashore seven days later; about 11,000 gallons were recovered.

2.3 Subsurface Collector System

A general backgound of the history and the activities associated with the subsurface collector system development has been presented in Section 2.1. The results of the literature review as they specifically relate to the subsurface collector system will be discussed in this section.

2.3.1 Chronology and Pace of Technological Developments

From the review of the available literature it appears that prior to 1970 subsea blowouts and its subsurface collection were of no major concern to the industry. Albeit, a number of U.S. patents had been granted to individuals or corporations (see Appendix 3) for their inventions dealing with underwater collection and/or storage of leaking or seeping oil. Interestingly, most of these ideas utilized the concept of a cone or a bell collector with a riser. The lack of visible interest in subsea blowouts could be attributed to the then prevailing conditions in offshore drilling operations. For instance, shallower water depths, bottom-supported drilling rigs (with BOP on the rig), smaller blowouts, and available spill response systems may have provided adequate means to combat the blowouts. The implication is not that definite though, because blowouts have been recorded [42] while drilling from floaters (drill ships and semi-submersibles) prior to 1970. Moreover, the process of improving upon the surface collection systems is still an on-going activity.

The 1969 blowout on the Union Oil Co. platform in the Santa Barbara channel has been found to be the first incident arousing some concern with blowouts. During the next four years a number

of ideas were disclosed. Some of these, found in the literature, are listed in Table 2.3-1. The illustrations are shown where available.

Brief descriptions and synopses are given later in this section.

The technological development during the 1969-1977 period had a very slow pace. T. K. Fanneløp's Oil Recovery Bell (Fig. 2.3-3), S. L. Ross' Metal Collecting Dome (Fig. 2.3-4) and R. H. Westergaard's Universal Bell (Fig. 2.3-7) are the only conceptual designs found in the literature. The Metal Collecting Dome was studied in Canada even before the drillships were brought to the southern Beaufort Sea for exploratory drilling [3, 52]. The other two concepts, developed in Norway, were intended to be extremely versatile.

The blowout on the Bravo platform in the Ekofisk field in 1977 added a perceptible momentum to the Norwegian efforts in dealing with such accidents in the Norwegian sector of the North Sea where exploration and drilling activities were increasing. Surprisingly, the other west European countries with interests in the oil and gas fields in the North Sea did not show any major concern for blowouts. This inference is based on the absence of related studies or research work in the literature attributable to these countries. Likewise, in the U.S.A. any activity was practically non-existent. But in Norway and Canada a slow but regular effort continued. In Canada, the concept of the metal dome was further advanced by CANMAR (even before Bravo blowout) into the concept of the Sandome (Fig. 2.3-5). A limited feasibility study was also performed by Lockheed Petroleum for the Environmental Protection Services (EPS), Canada [3, 52, 55].

The major R and D activity prior to the 1979 Ixtoc I blowout was concentrated in Norway as evidenced by a number of disclosures made in 1979 (Table 2.3-1). The studies related to the

TABLE 2.3-1
COLLECTOR CONCEPTS

No.	Year	Inventor	Description	U.S. Pat No.	Illustration
1.	1924	P.P. Featherstone	Fire Extinguisher	1,520,288	Appendix 3
2.	1967	G. Siegel	Multiple Storage and Redistribution Facility	3,339,512	Appendix 3
3.	1970	C.F. Logan	Fluid Recovery System and Method	3,500,841	Appendix 3
4.	1970	P.G. Paull et al	Piled Collapsible Collector	3,548,605	N/A (Ref. 42, 55)
5.	1970	Union Oil Co.	Plastic Canopy	N/A	Fig. 2.3-2
6.	1971	Sam M. Verdin	Oil Pollution Control and Fire Extinguishing Apparatus and Method	3,544,290	Appendix 3
7.	1972	A.M. Crucet	2-Ring Expansible Collector	3,653,215	N/A (Ref. 42, 55)
8.	1972	T.O. Blair	Perforated Cone Collector	3,658,181	N/A (Ref. 42, 55)
9.	1972	C.C. Lawal, Jr. P.P. Peters	Liquid Ring Collecting Cone	3,664,136	N/A (Ref. 42, 55)
10.	1972	R.O. Zielinski	Submerged Oil Leak Control	3,667,605	Appendix 3

No.	Year	Inventor	Description	U.S. Pat No.	Illustration
11.	1972	T.W. Childers (EPR)	Underwater Pollution Control	3,670,814	Appendix 3
12.	1972	L.M. Lejeune	Semi-Submerged Cone	3,674,150	N/A (Ref. 42)
13.	1972	W.H. Hyde	Method and Apparatus for Controlling Subnatant Oil Seepage	3,681,923	Appendix 3
14.	1973	A.J. Ortiz	The Plastic Bag	3,724,662	N/A (Ref. 42)
15.	1973	B.H. Cunningham	Safety Offshore Drilling and Pumping Platform	3,745,773	Appendix 3
16.	1976	T.K. Fanneløp	Oil Recovery Bell	N/A	Fig. 2.3-3
17.	1977	S.L. Ross et al	Metal Collecting Dome	N/A	Fig. 2.3-4
18.	1977	CANMAR (DOME)	Sandome	N/A	Fig. 2.3-5
19.	1976/77	R.H. Westergaard	The Collecting Bell (Universal Bell)	N/A	Fig. 2.3-6 to -8
20.	1978	A.R. Milne	Bottom Crawler Collector	N/A	N/A (Ref. 42, 55)
21.	1978	Uniconsult	Blowout Arrestor	N/A	Fig. 2.3.9
22.	1979	S. Arnesen	Collecting Bell Positioned at an Intermediate Sea Level	N/A	N/A (Ref. 42)
23.	1979	N/A	The Spherical Float Collector	N/A	N/A (Ref. 55)
24.	1979	G. Bastiansen	Self-propelled Vessel	N/A	Fig. 2.3-10
25.	1979	Bergens Mek. Verksteder	Blowout Bottle	N/A	Fig. 2.3-11
26.	1979	A. Borge	Bell-shaped Collecting Device at the Wellhead	N/A	N/A (Ref. 42)
27.	1979	T. Brattland B. Sørhus	Telescopic Oil Collector	N/A	Fig. 2.3-12

No.	Year	Inventor	Description	U.S. Pat No.	Illustration
28.	1979	K.W. Chen (Lockheed)	Underwater Collector Burner System	N/A	Fig. 2.3-13
29.	1979	J.P. Dupont	Bell-shaped Collecting Device at the Wellhead	N/A	Fig. 2.3-14
30.	1979	A. Evjen	Three Different Designs of Bell-shaped Collecting Devices at the Wellhead	N/A	N/A (Ref. 42)
31.	1979	K.J. Hjelset	Spill Collecting Bell	N/A	Fig. 2.3-15
32.	1979	A. Halstad	Tube Tank	N/A	Fig. 2.3-16
33.	1979	Norwegian Contractors	Floating Flare Stack	N/A	Fig. 2.3-17
34.	1979	Norwegian Contractors	Doughnut	N/A	Fig. 2.3-18
35.	1979	NSFI	Duct	N/A	Fig. 2.3-19
36.	1979	J. Odda	Bottom Supported Collecting Bell	N/A	N/A (Ref. 42)
37.	1979	Pemex/B&R	Sombrero	N/A	Fig. 2.3-20 & 21
38.	1979	P. Slettdal	Collecting Column	N/A	N/A (Ref. 42)
39.	1979	West Engr and Research Co.	Oil Well Arrestor	N/A	Fig. 2.3-22
40.	1979	O.C. Østlund	Blowout Production System (BOPROD) Bottom-supported Collecting Bell	N/A	N/A (Ref. 42)

No.	Year	Inventor	Description	U.S. Pat No.	Illustration
41.	1979	J.L. Simrad/ Charles Mann (Invention Quebec, Inc.)	Undisclosed-claimed to be a superior design for ease of installation	N/A	N/A
42.	1979	Otis Engr. Corp.	Undisclosed	N/A	N/A
43.	1979	Pemex	Barge-supported sombrero	N/A	Fig. 2.3-23
44.	1979	C.J. Garrison & Asso.	Undocumented Brainstorm	N/A	N/A
45.	1979	Earl & Wright	Drilling Rig Supported System	N/A	N/A
46.	1979	A.R. Martin	Suction cup (undocumented)	N/A	N/A
47.	1979	N.R. Collison/ John McNutty	Helicopter Deployable Cone and Riser	N/A	N/A
48.	1979	Brown & Root, Inc.	Double Concentric Cone	N/A	N/A
49.	1979	Brown & Root, Inc.	Skirt under the Sombrero	N/A	N/A
50.	1979	Brown & Root, Inc.	Caisson, Sombrero and Bridge	N/A	N/A
51.	1979	Brown & Root, Inc.	Donut with a caisson below the sombrero	N/A	N/A
52.	1980	Brostrøm Shipping Co./Karlskrona-varvet AB	Oil Collecting Vessel	N/A	Fig. 2.3-24
53.	1980	M. Mosberg	Three different proposals of big tanks fully enclosing the blowouts	N/A	N/A (Ref. 42)

No.	Year	Inventor	Description	U.S. Pat No.	Illustration
54.	1980	H.J. Maeland	Floating Tank	N/A	Fig. 2.3-25
55.	1980	SI/NUI	Collecting Bell (Revised)	N/A	Fig. 2.3-26
56.	1980	Brown & Root, Inc./ ARCO Oil & Gas Co.	Seepage Recovery System	N/A	Fig. 2.3-27
57.	1980	J.H. Milgram	Double Cone/Double Riser	N/A	Fig. 2.3-28
58.	1981	T.A. Robinson (CANMAR)	Ship-mounted Collector System	N/A	Fig. 2.3-29
59.	1981	COOSRA/DOME	Collector/Burner System	N/A	Fig. 2.3-30
60.	1981	T.G. Starr (DIAND)	Subsea Separating Collector	N/A	Fig. 2.3-31
61.	1982	NUTEC	Tea Cup	N/A	Fig. 2.3-32
62.	1985	MMS/BARDI	Ship-mounted Subsurface Collector System	N/A	

characteristics and the hydrodynamic behavior of underwater blowouts seem to have been of interest only to the researchers in Canada [17, 27, 28, 32]. A. R. Milne's Bottom Crawler Collector and K. W. Chen's Underwater Collector Burner (Fig. 2.3-13) were conceived during this period.

Ominously, the Ixtoc I blowout in 1979 not only provided a testing ground for many existing and newer devices developed for spill control, containment and collection, it infused unprecedented activity in all concerned sectors. The Table 2.3-1 shows a number of ideas and/or designs for subsurface collection of the blowout presented by individuals or organizations. It was the first time in the history that a real attempt was made to capture and collect the blowing oil, and the well-known "Sombrero" was evolved. The size and duration of the Ixtoc I blowout, and the actual systems and hardware used for collection of the oil, provided an opportunity for various observations and measurements. The basic concept of a collector with a riser was tested for the first time on a blowout of an unprecedented magnitude. During this period, many individuals availed the challenging opportunity to come up with their own brain-storms. Many of the ideas were too simplistic and too late. But they all had a very basic common philosophy, namely, the use of a conical or bell-shaped collector and a riser.

This historic blowout set the wheels in motion, and provided a stage for a concerted effort. It became a subject of controversial but common purpose. For the first time, the characteristics and behavior of the blowouts became a major analytical and experimental project in the U.S.A. and Norway in addition to Canada.

Earlier, a joint inter-governmental agency effort under the banner "Arctic Marine Oil Skill Program (AMOP) was organized in Canada. It was approved by the Government of Canada in 1976 as

a five-year technology program to develop oil spill countermeasures for Arctic waters. In its first year of operation (1978-79) about thirty contractors were engaged under the sponsorship of fifteen government agencies. The first AMOP conference was held in the FY 1978-79 and the participation was by invitation only. In addition to the pre-established Oil Spill Conferences organized by U.S.C.G. and A.P.I., the AMOP provided yet another forum for the exchange of ideas. However, the Ixtoc I blowout created such a sense of urgency that a need was felt to create another forum devoted exclusively to the subsea containment of oil. As a result, the first Subsea Containment of Oil Workshop was held in Toronto in February 1981 under the sponsorship of the EPS, the Arctic Petroleum Operators' Association (APOA) and the East-coast Petroleum Operators' Association (EPOA). In this joint industry-government undertaking, the participation in the workshop was by invitation only as selected jointly by APOA, EPOA and the Environmental Emergency Branch (EEB) of EPS.

At that workshop the then current state of knowledge regarding subsea containment systems was reviewed and future study directions were discussed. The participants were mainly from Canada, Norway and the U.S.A. At this workshop the importance of understanding the behavior of the blowout plume, as a prerequisite to controlling or containing the flow of oil and gas from the seabed was stressed. It was not a mere coincidence that the researchers like Topham, Rowe, Gregory, and Bishnoi etc. in Canada, Milgram in the U.S.A., and Fanneløp and Sjoen in Norway had already made significant advancements in the mathematical modelling of the plumes. A discussion on the plume related studies is given later in this section.

By the time of the Toronto workshop several experimental and conceptual efforts had been made to develop devices for collecting the blowing oil near the seabed. These devices also

featured means of transporting the oil and gas to the surface, burning the gas, and storing the separated oil for subsequent incineration or transfer to shore. Besides various design concepts, the research needs and the methods by which international cooperation on economic as well as technical fronts could be facilitated were also discussed at the workshop.

The workshop started with a pessimistic but challenging undertone announcing its objectives. In the words of K. M. Meikle of EPS, "Despite these (prior) activities and the supporting research that has been going on for a number of years, it is still not possible to state conclusively that subsea containment is feasible, or even potentially feasible, and it is equally impossible to rule it out as a viable countermeasure." The highlights of the workshop, as it related to technological advancements included the following:

1. Recapitulation on the developments of Dome Petroleum's Metal Dome (Fig. 2.3-4), CANMAR's Sandome (Fig. 2.3-5), the limited feasibility study by Lockheed for EPS, and the Sombrero.
2. Dr. Milgram's theoretical formulations of the gas bubble plumes simulating an oilwell blowout.
3. Dr. Topham's discussion of simulations, assumptions, and analytical foundations as used in plume analyses (pointing out the disparities between thermal and buoyant plumes and other theories).
4. The state of technology in Norway, covering the work done (or in progress) by all of the 21 or more organizations. The developments included all of the items listed from Norwegian sources in Table 2.3-1 and many research studies. The Otter Group study and report, described later, was the most comprehensive study ever undertaken.

5. Dome Petroleum's field experiments (in 66 ft deep water) to study and measure the behavior of an oil/gas plume under ice.
6. Dr. Mackay's review of the studies (others' as well as his own) related to the behavior of the rising plumes of crude oil and natural gas from subsea blowouts with specific reference to:
   - o plume geometry and currents;
   - o fractions of oil and gas likely to get dissolved or permanently dispersed as fine particles in the water;
   - o the residence time for oil and gas in water, especially the horizontal drift to which they may be subjected;
   - o estimates of any change in oil characteristics such as emulsion formation;
   - o the lack of chemical and mass transfer aspects of the plume behavior; and
   - o limited studies on shallow water blowout behavior with emphasis on emulsification in wellbore, oil droplet size, and oil gas plume separation etc.
7. The results of the laboratory tests at MIT on different conical collector models based on Dr. Milgram's observations and on-site measurements at the Ixtoc I blowout. Four collectors of different base to height ratios (Fig. 2.3-33) were tested.
8. T. A. Robinson's (CANMAR) concept (Fig. 2.3-29) of a tanker-mounted subsurface collection system in which the tanker was seen as being a multipurpose facility. This concept was ultimately adopted for all further studies to date.
9. Adoption of a "worst case" blowout scenario and the scope for future action.

At the end of the two day session a general concensus was reached that included the following [3]:

- o An awareness of the status of the technology as revealed by the participants;
- o Definition of a basic, over-all system configuration, and identification of subsystem options which consisted of:
  - the subsea system (i.e. the cone-like collector with and without seabed sealing, and its installation),
  - the marine riser system,
  - the surface collection system,
  - the interfaces;
- o A format for the developmental sequence with a tentative schedule;
- o Identification of the actions necessary to initiate productive development efforts;
- o The need for continuing, effective, and open communication;
- o A decision (based on technical merits and economics) whether to continue with the development efforts or not.

The general topics for discussion were agreed to be [3]:

- o The limiting parameters of the target blowout;
- o The three main components of the system (collector, riser and surface receiver) including:
  - the forces involved,
  - the environmental constraints,
  - the research requirements,
  - the appropriate scale for model testing, and
  - the handling, installation, operation and support constraints;
- o The overall system in terms of cost, time, geographic applicability, and effectiveness;
- o Future intentions and potential areas for cooperation.

The specific areas for further research were identified as:

- o The question of separation on the seabed and the requirement to vent the gas;
- o Getting an optimum recovery ratio of gas/oil/water in the collector;
- o The method of attachment to the seabed;
- o Extrapolation of theories about the behavior of fluids at greater depths;
- o The question of the forces on collectors installed close to the seabed;
- o The question about multiple risers and their components;
- o The feasibility of the "burning cylinder" proposed for the Arctic conditions;
- o The operational viability of specialized surface recovery vessels;
- o The interface problems;
- o The problem of two-phase flow in risers.

Due to its timing and purpose this workshop had extraordinary significance. It laid out the ground work for further work (which, ironically fell short of expectations as will be seen later). The basic parameters for further work as discussed and agreed upon are given below in their original headings [3]:

1. Limiting Factors
   - o Point source emission (blowout);
   - o A "worst case" situation defined as 30,000 BPD oil with a gas-oil-ratio (GOR) of 900 at atmospheric pressure;
   - o Specificity of individual blowouts for their characteristics and flow rates;
   - o Maximum water depth of 656 ft (200 m) for a practical and economical system;
   - o Limited tolerance for debris on the seabed;

- o Storage capacity of the surface vessel (probably) limited to about 20 days of continuous and unabated flow;
- o Long lead time required for construction of the system;
- o Probability of high unit capital cost;
- o Maintenance and operator training requirements;
- o Virtual impracticality of site-specific designs due to the immediately preceding reasons favoring a single multi-use and all-purpose system.

2. The Collector
   - o To be effective without a seal at the seabed offering versatility for various blowout situations;
   - o Lack of knowledge about internal and external forces likely to act upon the structure, and the need for further research work including large scale model tests at greater depths;
   - o Designed to separate oil and gas and directing the two phases into separate risers (anticipating some unspecified problem with two phase flow through a single riser);
   - o Subsea separation to be addressed as a research problem with frothing considered as a potential critical factor in the separation process;
   - o Handling, installation, operation and support requirements well within the existing drilling technology;
   - o 33 ft. (10 m.) diameter with anchoring, sealing and gas separation capabilities.

3. The Riser
   - o Need for two-phase flow research;
   - o Anticipated need for multiple risers (at least two, each having an inside diameter of 24 inches or more);

- o System efficiency believed to be primarily dependent upon the riser efficiency;
- o Need for additional research on the forces acting on the riser;
- o Environmental constraints expected to be no more severe for the riser than for the collector;
- o Handling, installation and operation believed to be well within the existing drilling technology;
- o Flexible, hard walled.

4. Surface Component

- o An ocean-going vessel capable of deploying the collector and riser;
- o Capability for fire-fighting and extended operation in toxic, explosive and flammable environment;
- o Need for a purpose-built or a specifically converted tanker to meet the aforementioned requirements;
- o Storage capacity for 15 days of operation without off-loading (up to 900,000 Bbls.);
- o Need for thorough safety analysis for the tanker (and other support vessels) to be operating in the hazardous environment of the blowout;
- o Environmental constraints believed to be comparible to those on the drilling operations.

5. System Considerations

- o Collector cost - $3.0 million
- o Riser bundle - $5.0 million
- o Converted 100,000 ton tanker - $25.0 million
- o Research and engineering - $2.0 million
- o Time estimate;
  - Research and development - 2 years
  - Detailed design and construction - 1 year
  - Operational hardware stage - 3 to 6 years

- o Dedicated, trained crew needed for an effective system;
- o A single ship complete with 5-point mooring and dynamic positioning system believed adequate for most of the open waters.

6. Future Intentions and Cooperation

- o Research requirements:
  - Problem definitions;
  - Gas separator cone design;
  - Analysis of two-phase flow in the riser;
  - Mechanical design for the riser;
  - Identification of system forces, both internal and external;
  - Surface handling and processor design;
  - Mooring system arrangements;
  - An operational system analysis, including an overall safety analysis.

7. Areas Lacking General Accord

- o Estimated rates of flow from blowouts;
- o Need for sealing between collector and the seabed;
- o Operational viability of ships entering and remaining in the immediate vicinity of a subsea blowout;
- o A generally acceptable surface component;
- o Operability in the plume area;

The areas for further work were not assigned to specific organizations or nations. Instead the research and studies already underway were to be completed by the parties concerned even if they involved duplications of efforts.

2.3.2 Prior Seminars and Workshops

During the AMOP workshops and the Oil Spill Conferences preceding the Subsea Containment of Oil Workshop in 1981 very limited ideas on subsea blowout and its collection were presented.

1977 Oil Spill Conference

R. H. Westergaard of SI (Norway) made the first documented presentation [38] with a broad coverage. The presentation touched upon the following main topics:

- o What is a blowout$_{\mu}$;
- o Blowout combat including economic impacts;
- o Consequences of a large blowout;
- o The risk analysis;
- o The situation in the North Sea;
- o Underwater blowout collection system and the status of its development (which was SI's first collection bell, Figs. 2.3-6 and 6A).

No other study, publication or presentation of this scope have been found in the literature prior to 1977.

1979 AMOP Workshop

The noteworthy and pertinent presentations in this workshop were only three. It was held approximately two years after the blowout on the Bravo platform.

1. R. H. Westergaard's paper [41] disclosed the SI's Universal Bell (Fig. 2.3-8). It was a refinement of their original collection Bell (Fig. 2.3-6).
2. K. W. Chen of Lockheed Petroleum Services Ltd presented the results of their study on the feasibility of underwater containment of subsea oil spills in Arctic waters [55]. In that study, a literature search and critical review of the then current state of technology of underwater containment systems was undertaken, and the methods considered feasible were recommended. It was first major study of its kind. It was based on three hypothetical blowout scenarios defined by location, water depth, oil flow rate and gas flow rate. The Underwater Collector Burner System (Fig 2.3-13) was disclosed.

3. Profs. D. R. Topham, P. R. Bishnoi and B. B. Maini of University of Calgary presented the results of their laboratory study on the behavior of oil and gas particles in salt water relating to deep oil well blowouts. The objective of the study was related primarily to the formation of gas hydrates [27].

1980 AMOP Workshop

Papers dealing with subsea containment or collection were inconspicuously absent. A paper by Topham and Bishnoi dealt primarily with hydrate formation in deep oil well blowouts.

1981 AMOP Workshop

1. K. M. Meikle of EPS summarized the Subsea Containment of Oil Workshop held in Toronto earlier the same year [52].
2. Enforcing the deeper concern for hydrate formation in deep oilwell blowout plumes in the Arctic cold, D. R. Topham of institute of Ocean Sciences (B.C.) addressed the modelling of such plumes with the help of the results of the laboratory studies presented in 1979 by Bishnoi and Maini, [28].

1982 AMOP Workshop

There were only two presentations on subsea containment.

1. I. A. Buist and S. G. Potter of Dome Petroleum Ltd. gave a comprehensive discussion on the up-to-date status of the Canadian Offshore Oil Spill Response Association (COOSRA) sponsored research work. It was revealed that as part of an international joint industry/government research program, Dome had undertaken several preliminary studies on the concept of subsea containment of an offshore oilwell blowout. Most of these studies were begun after the 1981 workshop, and the major effort was put in evaluating possibility of a containment system consisting of a

collector and riser suspended over the wellhead, directing the emanating oil and gas to a surface incinerator which would burn out both oil and gas (Fig. 2.3-30) [46].

The studies, carried out in four phases, consisted of:

1. Preliminary Feasibility including tank tests, by C-Core of St. John's, Newfoundland.
2. Turbulent Burning, by Energetex Engineering of Waterloo, Ontario.
3. Environmental Loads, by CanOcean Resources Ltd., New Westminster, B.C.
4. Preliminary System Design, also by CanOcean Resources Ltd., included construction and deployment procedures.

2. A simplified method for calculating the flow in the marine riser section of a subsea blowout collection device was presented by D. R. Topham et al, [29].

2.3.3 After the First Subsea Containment of Oil Workshop (1981)

The major activities during the 21 month period (between the 1981 and 1982 workshops) were influenced by some special factors:

1. There was fresh enthusiasm after the first workshop held in Toronto in 1981;
2. Knowledge of the status of the technology and areas of expertise;
3. Understanding of the pros and cons of the up to date developments;
4. Knowledge of the research needs;
5. A fresh definition of problem and a revised scope of development effort;
6. A set of system design parameters;
7. A format, sequence and schedule for further work;

8. A renewed commitment with the knowledge of international cooperation;
9. An established channel of communication;
10. An international group waiting for results.

Utilizing the parameters and guidelines agreed upon during the Toronto Workshop some concrete steps were taken for advancing the technology. While ongoing studies continued on their course, three new projects of very special significance and practical implications were undertaken:

1. In Canada

   The EPS contracted with German and Milne (a Montreal based engineering firm) to study the practicality, primarily from the safety stand point, of converting a tanker to carry out the task of controlling subsea blowouts. This was the "Surface Component" of the T. A. Robinson's concept accepted at the Toronto Workshop for further study [5].

2. In Norway

   Det norske Veritas (DnV) was chosen by Oil Pollution Control R and D Program (PFO) to evaluate different methods of containment of oil and gas from a subsea blowout. The main emphasis in this study was on operations and handling, but the containment systems were evaluated using their principles rather than specific designs and configurations. The basic concepts for this study were taken from the Otter Group report [6, 42].

3. In the U. S. A.

   The Minerals Management Services (MMS) engaged Dr. J. H. Milgram of M. I. T. to conduct studies (analytical and experimental) aimed at quantifying the parameters within which oil may be collected as it emanates from a blowing

well. Such parameters as water depth, collector height above wellhead, collector/riser size and configuration, reservoir characteristics (oil flow rate and GOR), and lift, etc were to be studied for their influence on collection efficiency. The studies that have been completed could not include the effects of water depth, lift, riser size and separation. The effects of collector height and gas flow rate on the volume of entrained water was also not studied.

Other Studies

The only other studies of importance were found to be:

1. The analytical studies conducted by Dr. D. R. Topham and Dr. R. D. Rowe on subsea containment system using results from Dr. Milgram's model tests [30].
2. Laboratory and field model tests conducted by NUTEC, P.S. Teigen and T. K. Fanneløp in Norway on Teacup, plume forces on a conical collector during deployment, and behavior of bubble plumes, respectively, [43, 37, 35].

2.3.4 Second Subsea Containment of Oil Workshop, Oslo, 1982

The follow-up to first workshop in Toronto was organized almost 2 years later in December, 1982 in Oslo. Any technological advancements made during the preceding year were presented.

Highlights

The major highlights included [4]:

1. A summary of the tanker study done by German and Milne for the Canadian EPS.
2. The highlights of DnV study on the subsea colletion principles undertaken for PFO.
3. Dr. Milgram's presentation on his 1/4 scale model tests on four collectors in the Bugg Spring, Florida.

4. A presentation by Guthrie and Rowley of Arco Oil and Gas Co. on their successful seepage recovery system (Fig. 2.3-27) that was installed in Santa Barbara Channel near the end of 1982.

5. The first disclosure by Alain Debry of CFP, France, about the activities in France. It was learned that the French government and oil industries were not interested in the subsea containment research. The lack or absence of offshore exploration/production in French waters was cited as the primary and, indeed, a valid reason. However, with the realization that the two major French oil companies (Elf Aquitaine and TOTAL) mostly operate abroad, they had to be concerned with the subsea containment problem. For that reason a low key pilot study was begun in 1980. The French Petroleum Institute (IFP) undertook to perform some laboratory tests generally duplicating the tests done by Milgram and Burgess in the U.S.A. and Teigen in Norway. The French tests and the results were admitted by Debry [56] to be of minimal interst to other researchers. However, the test results were claimed to compare well with others. As a follow-up, the question of construction and installation of a collector was given a limited review in 1981. Since 1982 no further study has been undertaken or planned. Elf and TOTAL decided to give up on the research work, and just keep in touch with the technological developments in other countries through publications.

6. A description of the principle, design and application of NUTEC's "Tea Cup" (Fig. 2.3-32) as a concept for containment of petroleum from subsea wellhead [43].

7. The paper by Topham and Rowe dealt with the application (or extension) of Milgram's reduced scale tests for a subsea containment system to a hypothetical blowout case. it was a more detailed analysis of flow through the plume and riser as compared to Topham's earlier presentation at the AMOP 1982 Workshop [29].

8. T. K. Fanneløp (NTH), Karl Sjøen (SINTEF) and R. H. Westergaard (SI) expanded on their earlier studies related to bubble plumes and sealable collector bells (Fig. 2.3-34 and 35). The sealable bell with a special base plate receptacle as conceived at SI is described as a hybrid between the Universal Bell (Fig. 2.3-8) and the concept of pre-installed bells at each well.
9. J. G. Gainer discussed the status of COOSRA sponsored work revealing that while the technical feasibiltiy of the subsea containment concept was established, the operational and economic aspects remained unresolved. COOSRA's concern was with severe ice conditons and lack of a feasible deployment procedure. No new ideas or studies were disclosed.

2.3.5 Outcome of Oslo Workshop

Unlike the Toronto workshop, the Oslo workshop appears to have ended without a concrete program for the future. A few items were discussed but no commitments were solicited or made. In general, the participants agreed on the following items:

1. Technical problems were more acute than the economics;
2. The procedure for positioning and installation of the collector system was lacking, and its practical limitations needed to be removed before proceeding with further development of system configurations and the hardware;
3. The pressure control and monitoring of the closed systems (on the seabed), as proposed by Norwegian researchers, was a critical element;
4. The response and installation time would be considerable (several days, perhaps weeks). Coupled with the anticipatedly small weather window for this kind of operation, the viability of subsea collection may still be questionable;

5. Other, conventional methods (e.g. capping) should be given priority. Any subsea containment operation should be resorted to if capping proves unsuccessful. The interim period could be utilized for preparations and mobilization;
6. A recovery operation will not be 100 percent effective under any circumstances;
7. A relief well will take an average of three months;
8. The lack of access to the wellhead for further capping operation makes a closed collecting system disadvantageous;
9. With open collectors the separation system will have to be very efficient and capable of handling large volumes of water;
10. Due to lack of confidence in a viable and practical subsea collection system, surface collection devices need to be reconsidered as alternatives;

The Post-Oslo Workshop Period

All developmental activities in Canada and Norway seem to have come to a stop after the Oslo workshop. Nothing in the literature has been found that suggests the continuation of any previous studies or start of a new one. Most of the previously active organizations in Canada and Norway have decided to table all developmental activities or at least postpone the effort without scheduling a time-frame for reconvention. The lack (or loss) of interest can be attributed to one or more of the following:

1. Physical reality of a technically feasible system and hardware is unproven;
2. The operational question (positioning and installation) remain unresolved;
3. The economic considerations are less than encouraging;
4. The cost-effectiveness of such a system remains questionable. A simple and inexpensive system is considered less useful, whereas a sophisticated and versatile system would entail huge capital investment.

However, in the U.S.A. prudently, the MMS sponsored studies have continued. As stated earlier, this study is a major effort to answer some of the unanswered questions.

2.3.6 Actual Systems Installed

The Plastic Canopy

The Plastic Canopy installed by Union Oil Co. in the Santa Barbara Channel in 1969-70 was the first known system to be placed underwater (on the seabed) for collecting oil and gas. The most distinct aspect of this undertaking was that the oil and gas were seeping naturally, and there were no plumes, fire and other hazards associated with blowouts.

The Sombrero (Subsea Blowout Collector)

It is the first and the only real system to date that has been designed, constructed, installed and operated anywhere in the world as a subsea blowout collector. It was built and installed by Brown and Root, Inc. for Pemex to contain the Ixtoc I blowout in 1979. A few features of this episode are noteworthy:

a. The Ixtoc I was the largest known blowout in the history. The flow rates of oil and gas were never precisely known, but is is generally believed that they were higher than the flow rates selected at the Toronto workshop for the ""worst case" situation;
b. There was considerable debri around the wellhead from the fallen drill strings and the derrick;
c. The BOP was not vertical but tilted by 10-15 degrees from the vertical;
d. The blowout discharge was from the center of the BOP as well as from around the drill casing at the seafloor;
e. There was no advance design, concept study or planning for the Sombrero or the overall containment system;

f. The Sombrero and the associated facilites were designed, built and installed in less than three months starting from scratch;

g. The people involved in the Sombrero project did not have the benefit of all the research, studies, and the technological development that followed the Ixtoc I blowout;

h. Due to the real (not hypothetical) circumstances, the urgency of repsonse took precedence at the cost of the technical expediency.

The ARCO Seepage Recovery System

The third in chronological order, this seepage recovery system (Fig. 2.3-27) combined the features of large underwater structures, subsea separation facilities, underwater pumping equipment, and provision for highly corrosive gases. It consisted of two steel structures weighing 350 tons each, and was installed in 220 feet water depth in the offshore Coal Point area of Santa Barbara Channnel in 1982. The detailed design

f. The Sombrero and the associated facilites were designed, built and installed in less than three months starting from scratch;
g. The people involved in the Sombrero project did not have the benefit of all the research, studies, and the technological development that followed the Ixtoc I blowout;
h. Due to the real (not hypothetical) circumstances, the urgency of repsonse took precedence at the cost of the technical expediency.

The ARCO Seepage Recovery System

The third in chronological order, this seepage recovery system (Fig. 2.3-27) combined the features of large underwater structures, subsea separation facilities, underwater pumping equipment, and provision for highly corrosive gases. It consisted of two steel structures weighing 350 tons each, and was installed in 220 feet water depth in the offshore Coal Point area of Santa Barbara Channnel in 1982. The detailed design (done by Brown and Root, Inc.) was based on the following considerations:

a. Total area to be covered was 100 ft x 200 ft in 220 ft water depth;
b. Ability to relocate the stuctures in case of migration of seeping vents;
c. Ability of the structures to withstand tidal, earthquake, and storm forces without the help of piles;
d. The design to be suitable for routine fabrication techniques, and also for installation with the equipment available on the West Coast. This second factor necessitated two structures rather than one large structure;
e. The working parts to be as few as possible;
f. Common and readily available materials to be used;
g. Ease of anchoring of the structures on the seabed without cables and chains;

h. Provision for corrosive effects of CO_2 in the gas in the design of structures, selection and protection of pipelines, and modification of separating and other equipment.

A few important experiences were gained from this project:

a. The effort and techniques used on this project are not limited to 220 ft water depth;
b. Precise positioning on seabed can be achieved, and in such operations Remote Operated Vehicles are indispensable;
c. All offshore operations are difficult but manageable.

2.3.7 The Synopses from Literature Review

Hydrodynamics of the Blowouts

After the Ixtoc I blowout in 1979 it was realized that proper and sufficient understanding of the characteristics and hydrodynamic behavior of blowouts was essential. During the next 2-3 years some extensive studies were done. However, as can be seen from Table 2.3-36 and the References, only a limited number of people were engaged in this endeavor. The first directly related work found in the literature is that of Dr. D. R. Topham published in 1975 [A16], although academically releveant publications of Taylor [A30], Kobus [A27], Ditmars and Cederwall [A28] preceding Topham's, and Hussain and Seigel [A40], McDougall [A29] coming later, have been widely used as primary references. In early 1980 the work of Fanneløp and Sjøen [33] on the hydrodynamics of underwater blowouts was considered a major contribution. Then analyses and measurements by Milgram et al [various] and Topham et al [various] gave a character to the blowout analysis that was more relevant to the subsea containment/collection system development. At the same time Fanneløp, Sjøen, Haarland, etc., in Norway also turned to this practical problem.

TABLE 2.3-36

SUMMARY OF SELECTED PAST STUDIES

SUBJECT	INVESTIGATORS	SCOPE/OBJECTIVE	REF.
1. Hydrodynamic Behavior of the Blowouts and Plume Analysis	Milgram (M.I.T.)	Hydrodynamics of the bubble plumes, its characteristics, and mathematical modelling.	7,10,14,17
	Milgram et al (M.I.T.)		10
	Topham		28, A16
	Topham et al		27
	Mackay	Effect of emulsification	50
	Fanneløp and Sjøen	Hydrodynamics	33
	Sjøen	Same	34
	Clark and Perkins (Arco)	Same	58
2. Subsea Collection Concepts	Dome/CANMAR	Concepts for Arctic	46, 48
	DIAND	Subsea Separation	3
	Lockheed Pet. (K.W. Chen)	Evaluation/Development	55
	Norwegian Organizations:		
	o SI	Concept developments and evaluations	38,39,40,41
	o SINTEF		36, 37
	o NUTEC		43
	o OTTER GROUP	General study and Evalu.	42
	o DnV	Operational Analysis	6
3. Model Tests (Collectors and Plumes)	Burgess and Milgram (M.I.T.)	Collection efficiency and collector configuration	12, 13, 18
	Milgram (M.I.T.)		8, 15, 16
	Topham (Canada)	Riser Flow	29, 30

SUBJECT	INVESTIGATORS	SCOPE/OBJECTIVE	REF.
	Sjøen Fanneløp (Norway) Teigen	Plume Characteristics, collector installation and forces.	34, 35, 37
	NUTEC (Norway)	Positioning/installation	43
	SI (Norway)	Concept validation	40
	C-CORE (Newfoundland)	Concept validation	46
	Energetex Eng. (Canada)	Combustion of oil/gas/water mixture	46
	Lockheed Petr. (Canada)	Concept validation	55
	IPF (France)	Concept evaluation	56
	NHL (Norway)	Concept evaluation	37
4. Surface Systems (Tanker)	German & Milne/EPS	Feasibility Study	5
5. Surface-supported Subsea Collector System	T.A. Robinson (CANMAR)	Concept proposal	54
	Westergaard (SI)	Conceptual study	40
	Teigen (NHL)	Concept proposal	37
	Brostrøm Shipping Co.	Concept proposal	42
6. Riser	Topham et al	Flow analysis and model tests	29, 30, 31
7. Operations	OTTER Group	Collector Systems	42
	DnV	Collector System	6
	Teigen/NUTEC	Lowering of Collector	37, 43
	German & Milne	Tanker	5
8. Cost	OTTER Group/DnV	Cost-benefit	6, 42
	German & Milne	Tanker	5
	Toronto Workshop	Total System Cost	3

Areas of Concurrence

All investigators agree, assume, believe, or conclude that:

1. The flow characteristics of the blowout for most part of the water column are those of a buoyant plume rather than a jet. The generally accepted plume profile is as shown in Fig. 2.3-37.

2. In using the integral plume theory the Gaussian form of the radial distribution of velocity and density defect (or void fraction) are found to correlate well with experimental observations.

3. The characteristic height "h" (or Z) as used in expressions for Froude number and flow rate, denoting the vertical distance between the base of a collector and the point of blowout emmission (Fig. 2.3-38), is an extremely critical parameter affecting the volume of entrained water.

Areas of Non-Concurrence

In some aspects the analysts (or investigators) remained apart in their judgment, estimates, or findings:

1. Plume Diameter at the Surface

   The quotes of estimates have ranged from about 16 percent (Milgram) to 40 percent (Sjøen) to 100 percent (Bishnoi and Maini) referred to the source depth.

   Ironically, it is a parameter of immense practical importance in the sizing, installation and operation of blowout containment/collection systems.

   The plume radii as calculated by Fanneløp and Sjøen [33] and Milgram [5] are comparable (see Fig. 3 in Appendix 2.3).

2. The Virtual Origin of the Plume

Referring to Fig. 2.3-37 or 2.3-38, the distance Z_o is very significant in the analyses of Rowe and Topham wherein the modifed characteristic height is (h + Zo). Fanneløp and Sjøen conspicuously account for it, but it does not appear in Milgram's analyses.

The liquid flow rates and the collection efficiencies are highly dependent upon the height "h" or (h + Zo) as will be seen later.

3. Flow Rate and Collection Efficiency

A reliable estimate of the volume of the entrained water (hence the total liquid flow rate) through the collector and riser is essential for sizing these as well as the surface components. But, as can be seen from Appendix 2, there are some fundamental differences in the theoretical approaches. Moreover, a reliable analytical tool has not been developed for accurately estimating the flow rates and the collection efficiencies.

4. Development of the Theories

Although all of the analysts have used a common foundation, and they all have borrowed from each other, but they also have applied their own individualistic simplifying assumptions and boundary conditions. Consequently, the final results have been diverse; sometimes only in form, and sometimes in substance as well. The imprecise but important parameters, such as the entrainment coefficient (α) and the scale ratio (λ) have only empirical values.

2.3.8 Summaries of Plume Studies

The observations made and the conclusions reached by various investigators are listed below in the form of excerpts from their publications. The information obtained through informal

or formal communications are also included and they are so identified. The historical background and the limitations of various plume theories are included in Appendix 2 for reference.

1. Studies by Fanneløp and Sjøen (3, 33]

In this analytical/experimental work:

- The hydrodynamic structure of deep set underwater bubble plumes is studied with reference to thermal plume theory;
- The effects of particular interest include (1) the gas expansion with decreasing hydrostatic pressure and the strong influence of variable buoyancy on relevant plume parameters, (2) the interaction with the free surface which results in a rapid radial surface layer;
- The main features of the plume are verified by experiments at 18 ft. (5.5 m.) and 33 ft. (10 m.) depths;
- Gaussian similarity is observed;
- Available laboratory data and the results from D. R. Topham's field experiment at 197 ft (60 m) depth are correlated based on a modified plume theory including variable buoyancy;
- Mathematical formulas for the horizontal surface layer are also checked against the new experimental results;
- The results of the study are intended to aid in the development of surface collection systems.

The basic premises, hypotheses and assumptions:

- From a rudimentary analysis it is seen that the initial momentum is relatively unimportant for depths in excess of 328 ft. (100 m.);
- The upward motion of the hydrocarbon fluids is dominated by buoyancy, and the precise knowledge of initial conditions is not mandatory;

- For blowout with medium-to-high GOR the oil contributes little to the overall buoyancy and only the gas merits the consideration (reducing it to a two-phase flow problem);
- Due to the initial impact with water and the high turbulence level in the rising plume, the oil will break up into small droplets of negligible terminal rise velocity;
- The rate of transport of the oil to the surface is determined by the plume velocity which in turn depends on the amount of free gas;
- The gas volume will increase as the plume rises due to expansion and due to boiling of lighter fractions such as propane;
- Allowance must be made for variable buoyancy in the hydrodynamic analysis, except in shallow waters;
- The actual thermodynamic expansion process is believed to be intermediate between adiabatic and isothermal, and for the high expansion ratios of interest the nature of this process is of considerable importance;
- The important hydrodynamic features of an underwater blowout can be illustrated as in Fig. 2.3-37;
- The jet region close to the seabed is of limited extent and relatively unimportant for deepwater wells;
- The developed plume, which extends nearly from the seabed* to the surface, is comparable to a thermal plume but in general does not obey the similarity rules for unstratified surroundings;

  [*In this paper the authors have, apparently, assumed the point of blowout discharge to be from a wellhead stub-pipe close to the seabed.]
- The surface interaction zone is quite shallow, but of great importance when considering the fate of the oil on the surface;

- o The vertical motion is deflected outward by the constant pressure boundary with little loss in momentum;
- o A jetlike radial layer is generated close to the surface which extends a considerable distance from the blowout point;
- o In designing equipment and in contingency planning to combat underwater blowouts, it is important to know the extent and thickness of the oil slick for various environmental conditions;
- o The surface slick resulting from a blowout is generally thin and expansive making its surface-based containment and collection more difficult than an equivalent surface spill.

The analytical approach:

- o The bubble plume is analyzed with reference to the analogous problem of thermal plumes first suggested by G. I. Taylor in 1955 [A31]. The thermal plume solution is in turn based on the Boussinesq approximation (which is not very accurate near the source);
- o Necessary modifications are made to the theory to predict the deepset bubble plumes expected from underwater blowouts;
- o The equations of motion are based on the assumption that the mass flow rate of gas is constant and the density variation follows a polytropic law in terms of the vertical height (z) from the seabed and a condition lying between the isothermal and adiabatic expansion.
- o Due to the discrepancies related to the two-phase character of the bubble plume the appropriate plume density is determined from the total mass flow in the plume;

- o Only Gaussian or tophat profiles for velocity and buoyancy are used, and only the integral forms of the equations of motion are considered;
- o In addition to the equations for conservation of mass and momentum, a third equation expressing the conservation of buoyancy in stratified environments is used in accordance with the thermal plume theory;

Fanneløp and Sjøen's Observations/Findings:

- o The experimental plume is found to be conical;
- o Large eddies which give rise to the lateral movement are apparent;
- o The visible plume is identical with the buoyancy or bubble part of the plume;;
- o The vertical motion is observed to extend further in the radial direction;
- o From visual observations and velocity measurements the parameter λ_G (for Gaussian profile) is found to be equal to 0.6;
- o An accurate determination of (λ) requires detailed measurements of both velocity and buoyancy profiles. The value of $\lambda_G = 0.6$ is an estimate, and postulated to be within $\lambda_G = 0.65 \pm 0.1$;
- o Direct measurement of entrainment proved to be difficult. Therefore, the coefficient (α) has been derived from similarity laws;
- o The general mathematical expression for plume radius and velocity in a "tophat" profile are given by

$$b_T = \frac{6C\alpha}{4q + p + 5} \cdot z^{q+1}$$

$$V_t = \frac{1}{2}\left(\frac{4q + p + 5}{C\alpha}\right)^{2/3} \cdot \left[\frac{\lambda_T^2 \phi_o C_R}{3(q + p + 2)}\right]^{1/3} \cdot z^{(p - 2q - 1)/3}$$

Where p, q, C_α and C_R are constants of proportionality obtainable from the isothermal law of the form,

$$\alpha_T(z) = C_\alpha z^q \; ; \; R(z) = C_R z^p$$

z = height above seabed (assumed to be the point of discharge)

b_T = plume radius at height Z

V_T = central plume velocity at height Z

α_T = the entrainment parameter of a thermal plume (an empirical constant)

λ_T = void ratio, or the ratio between the widths of density and velocity profiles in the plume (an empirical constant)

ϕ_o = buoyancy parameter at Z=0

R_Z = auxiliary pressure function, also expressed as

$$R_Z = \frac{H}{H-Z}$$

H = water depth

T = subscript denoting "tophat" profile.

o Due to lack of information, q can be assumed to be zero (no scientific rationale given). Then,

$$b_T = \frac{6\,C\alpha}{p+5} \cdot z \quad \text{, and}$$

$$V_T = \frac{1}{2}\left(\frac{p+5}{C\alpha}\right)^{2/3} \cdot \left[\frac{\lambda_T^2\,\phi_o\,C_R}{3\,(p+2)}\right]^{1/3} \cdot z^{(p-1)/3}$$

[Note: Dr. Topham, in his subsequent analyses had taken p=q=0, and $C_\alpha = \alpha_T$ which corresponds to the classical thermal plume theory.]

- The numerical solutions based on piecewise local similarity laws and exact solutions have been found to be quite comparable.
- The phenomenon of constant or increasing velocity observed by Topham [A16] has been predicted by the theory but at a different depth (35 m. vs Topham's 23 m.);
- Not enough data are available to build a theoretical model for calculating a variable entrainment coefficient α_T (z);
- The empirical constant (λ) is found to have a non-neglible effect on the velocity;
- In deeper waters the assumption of the adiabatic process of expansion of the warm gas from a blowout is unrealistic. The plausible engineering approach is to assume adiabatic process until the gas temperature equals the ambient water temperature, and then an isothermal process up to the surface;
- A more general solution based on Gaussian profile is much more complex.
- As the buoyant plume approaches the ocean surface, it is deflected radially outward with little loss in momentum. Most of the gas is found near the center of the plume covering an area equal to the plume cross-section and forming the boil region;
- Small bubbles and oil drops surface further out depending upon the relative magnitude of the terminal velocity and the speed of the radial surface flow;
- The experimental observations are too limited. Therefore, they can not support or refute various hypotheses or Dr. Topham's findings on deep-set bubble plumes.
- Theoretical models such as that of Ditmars and Cederwall [A28] had been based largely on Kobus' data [A27] wherein values of (λ) as low as 0.2 have been used just to obtain a reasonable agreement between theory and practice;

- o The experiments were performed in a towing basin (at NHL) which is 260 m long x 10.5 m wide x 5.5 m. deep with a 10 m. deep extension;
- o Variation in buoyancy across the plume was not measured due to unavailability of a measuring device. The bubble size and rise velocity could also not be measured;
- o Inspite of poor and unreliable data measurements caused by many sources of error and other shortcomings, two important observations are made:
  - the similarity assumptions are reasonable for all depths and gas (air) flow rates,
  - The Gaussian profile is found to correlate by about 90 percent;
- o The comparison between theoretical and experimental values for plume radius and velocity show excellent correlation for the limited depth used;
- o The entrainment coefficient is found to have a weak dependence on gas flow rate contrary to the theoretical predictions. For small gas flow rates α_G = 0.07 - 0.08, but for larger flow rates or greater source depth $\alpha_G > 0.1$;

The graphic representations of these and other results are included in Appendix 2.3 for reference.

2. Further Theoretical Modelling of Subsea Gas Blowouts - Sjøen [34]

As an improvement to the foregoing analyses a revised theoretical model of the bubble plume has been presented by Karl Sjøen. This analytical model is claimed to be useful for calculating flows from high GOR subsea blowouts.

The revised analysis still assumes the validity of the Gaussian profile for the plume. The mathematical expressions are different from the earlier analyses, and

includes such parameters as the source flow rate of the gas and the water depth. The author suggests the following values for the other plume parameters for practical calculations:

Entrainment coefficient (α): 0.07 - 0.10
Scaling parameter or
profile ratio (λ): 0.6 - 0.8
Slip velocity relative
to gas : 0.1 - 0.3 m/sec

These parameters are not universal constants and need experimental support to be estimated. The revised theory gives better overall agreement with the experiments (see Appendix 2.3). The new mathematical equations are:

$$P_c = \frac{\left[\frac{1}{2\,\alpha\, ho\, \lambda^2}\right] \cdot \left[\frac{(1+\lambda^2)\, Q_o}{2\,\pi\, ho}\right]^{2/3} \cdot \left[\frac{1}{g\alpha}\right]^{1/3}}{B^2 \left[\frac{Vc}{M_1} + (1+\lambda^2)\frac{Vr}{M_1}\right] \cdot \left(1 - \frac{z}{ho}\right)}$$

$$\frac{d}{dz}\left[\frac{Vc}{M_1} B^2 \left(1 - \frac{\lambda^2 \rho c}{(1+\lambda^2)}\right)\right] = \frac{Vc}{M} B$$

$$\frac{d}{dz}\left[\frac{Vc^2}{M_1^2} B^2 \left(1 - \frac{2\lambda^2 \rho c}{(1+2\lambda^2)}\right)\right] = \frac{1}{\left[\frac{Vc}{M_1} + (1+\frac{2}{\lambda})\frac{Vr}{M_1}\right] \cdot 1 - \left(\frac{z}{h_o}\right)}$$

where $M_1 = \left[\frac{(1+\lambda^2)\, g\, Qo}{2\,\pi\,\alpha^2\, ho}\right]^{1/3}$

$$B = \frac{b}{2\,\alpha\, ho}$$

ρo = Void fraction
ho = Source depth
Qo = Gas flow rate at the source
Vc = Vertical velocity at the center of plume
Vr = Slip velocity, or vertical velocity at a radius r
z = Distance from virtual origin
α, λ = as defined previously.

The major assumptions include: axisymmetric, non-rotating flow, isothermal expansion, no hydrate formation, and negligible gas momentum and the fluctuating component of the liquid momentum.

3. Fanneløp's Lab Experiments with Bubble Plumes [35]

This study combined the theoretical analysis of a blowout plume as well as its application to the development of methods and equipment for its containment.

From theorectical point of view, this work can be considered as an extension of the original analysis under the title "Hydrodynamics of Underwater Blowouts", [33].

The highlights of this study can be summarized as follows:

Shortcomings in our knowledge of blowouts:

- The distribution of bubble size in the inner core region of the plume is not well known;
- The width of density defect region is uncertain;
- The turbulent fluctuations in a bubble plume have much higher intensity than in single phase jets or plumes, and the associated momentum term in the governing equations may have considerable influence on the pumping efficiency of the plume at least on model scale;

- o Errors of 10-25 percent are possible when extrapolating lab results to full scale, according to K. Sjøen.
- o Narrow test tanks with confining walls used for plume-related studies may have led to many erroneous conclusions since the plume is not really free. The test tank used in the experiments referred to were of 1:1 ratio (height : diameter) and of a circular cross section;
- o The measurement of the bubble speed is critical. The most versatile instrument for plume study is believed to be a rapid response hot film probe. (Note: Dr. Milgram is reported [35] to have developed momentum impact discs and probes to measure bubble speed with success. Fanneløp had used a conical probe from DISA);
- o True flow geometry of an underwater blowout plume (in the open ocean) can not be reproduced in a lab, unless the test tank is so large and so proportioned that all adverse effects of confinement are eliminated. The proportions and dimensions are not known yet:

  Fanneløp's test tank : $\frac{\text{Plume Dia.}}{\text{Tank Dia}} = 0.2$

  Milgram's test tank : $\frac{\text{Plume Dia.}}{\text{Tank Dia.}} = 0.5$

(As part of Fanneløp's experiments the effects of test tank size were to be studied but it is not known if it was ever completed.)

- o Some (unspecified) laboratory tests and theoretical studies have, reportedly, revealed features that are both unexpected and different from those known for steady bubble plumes. These observations relate to bubble clouds and starting plumes rather than blowout plumes;

4. "Hydrodynamics of an Oil-well Blowout" by D. R. Topham [A16] is believed to be the first known work directly related to the subsea blowout. The details of the work (theory or experiment) were not available, but some of the results are comparatively shown in Appendix 2.3, 2.4 and 2.5.

5. "The Modelling of Deep Oilwell Blowout Plumes" by D. R. Topham [28] basically deals with the effects of hydrate formation on the behavior of the plume.

   The theoretical formulation is based on the assumption that the average vertical velocity in the plume is Gaussian in form, and McDougall's [A29] equations are applicable.

6. "Wellbore and Near-Surface Hydraulics of a Blown-out Oil Well," by A. R. Clark and T. K. Perkins [58] primarily deals with land-based blowouts. However, the following statements or observations are pertinent:
   - o The calculation of critical flow velocities, pressure and temperature at the exit of a blowing well depends upon the wellbore geometry, the thermal properties of the wellbore and its surroundings, and an apriori knowledge or estimate of the well productivity index and GOR;
   - o The primary mechanism governing the hydraulics of a blown-out oil well is the rapid, near-surface liberation and subsequent expansion of large amounts of dissovled gas;
   - o As the accelerating fluids rise to the surface, their speed is limited by the available flowing pressure. For typical GOR's, it has been found that the two-phase pressure drop limits the speed and hence, the maximum rate of flow. As the speed of the fluids approaches the critical (sonic) speed of the mixture,

the pressure drop increases dramatically. Corresponding to the two-phase sonic discharge velocity is the critical (minimum possible) discharge pressure;

- The critical flow state depends strongly on the relative volumes of oil and free gas present at the surface. As the critical pressure decreases, the volumetric fraction of free gas increases, causing an increase in the two phase critical speed for typical GOR's;
- It is possible for a blowout flow rate to be less than critical because of partial blockage of the well exit. In such cases, the surface pressure will stabilize at a value greater than the critical pressure;
- Whatever the nature of the well exit, however, there is a region of pressure transition between the underexpanded pipe flow and its associated two-phase atmospheric plume. The flow conditions at the end of this region are important for analyzing the subsequent interaction between the expelled wellbore fluids and the atmosphere;
- The analysis (by Clark and Perkins) of the wellbore and discharge jet hydraulics has been coupled with the formation characteristics and the reservoir pressure. Knowledge of the well Productivity Index (PI), bottomhole temperature, and GOR then fixes the critical flow conditions for a given well;
- The hydraulic system of an uncontrolled well consists of the oil/gas reservoir, the wellbore, and the near-surface two-phase underexpanded jet. Thus, the entire flow behavior of the system must be consistent

with reservoir performance and capability. The PI is defined as,

$$PI = \frac{Qo}{P_r - P_b}$$

Qo - std vol. flow rate of oil standard B/D

p_r - reservoir pressure

p_b - bottomhole pressure

The PI and produced GOR can vary during the life of a well.

7. In "A Note on the Importance of the Mechanics of Large Scale Bubble Plumes in Modelling Deep Water Oilwell Blowouts", [32], Dr. Topham has presented his critical evaluation of the approaches taken by other researchers. He points out that:
   - o The main difference between the thermal plume (as used by most) and the bubble plume models is that in the latter case allowance is made for the increasing buoyancy of the bubbles as they expand under the reduced pressure and also their "slip" velocity relative to the water;
   - o Although an approximate correlation between such theories and available experimental data has been established by Fanneløp and Sjøen [33, 34], from a fluid dynamics point of view the similarity assumptions do not agree completely;
   - o The discrepancy is evidenced by the lack of effective values for the entrainment 'constants'. For thermal flows the entrainment costant appears to be universal and does not depend upon the buoyancy flux within the plume. For the bubble plumes, this constant is a function of the initial buoyancy flux;

- o Measurements by Topham on very large scale bubble plumes suggest that there is a breakdown of true similarity at some height within a particular plume;
- o The similarity laws, however, as generally applied to blowout plumes can be used as a reasonable approximation for water depths of 1000 ft or less, but suffers major deviations in waters deeper than that - especially if hydrate formation takes place;

8. D. Mackay's paper on "Aspects of the Behavior of Oil and Gas Plumes in Water" [50] also deals with the plume behavior. The importance of understanding this behavior is underscored.
   - o The studies have confirmed that in a blowout the gas bubbles tend to be 2 to 10 mm. diameter and the oil drops 0.5 to 1.0 mm. diameter, depending upon the jet velocity and fluid-water interfacial tension;
   - o The paper shows that in a blowout most of the heat and mass are associated with oil. Also at certain water depths, oil and gas volumes become equal for a given GOR. In less than 100 m. water depth the shallow plumes tend to have larger gas volumes;

     It states that: A GOR of 100 = actual vol. ratio of 29 at atm. pressure

     If ρ gas = 0.62 kg/m^3 and ρ oil = 800 kg/m^3

     then $\frac{\text{oil mass}}{\text{gas mass}} = \frac{800}{29 \times 0.62} = 44.49 > 44$

     Obviously, at higher GOR, the mass ratio will be smaller;
   - o Mackay takes the potential energy approach to explain the phenomenon of delayed surfacing of oil particles.

The potential energy of 1 m^3 of gas at
10 m. depth = 10 $g\Delta\rho$
$\Delta\rho$ = 1020 kg/m^3

Therefore, potential energy = 10 x 9.81 x 1020 = 10^5 J = 1/2 mv^2 which gives V = 570 m/s.
The gas loses its energy to water, but because of heavier mass the energy gained by water does not translate into a high velocity for water particles. The same theory holds true for the oil particles. This forms the basis for delayed oil surfacing and separation of oil and water from gas before it reaches the surface;

- o Mackay's experiments did not support the contention that emulsions form during plume rise as was apparently observed in the Ixtoc I blow out. He surmizes that emulsions could be formed on the surface and carried down by the reverse plume currents.
- o His main forte' is the emulsification of the oil released from a subsea blowout.

9. The "Studies of Gas Bubble Plumes Simulating an Oilwell Blowout", by J. H. Milgram [17], is a brief description of the theoretical analysis and computer modelling of the surface flow zone carried out by Prof. R. S. Van Houten of M. I. T.

In the studies at M.I.T. (Milgram, Fazal and Van Houten, etc) the blowout plume is described as consisting of three distinct regions or zones (analogous to the divisions postulated by Fanneløp and Sjøen [33]) as follows;

ZOFE: Zone of flow establishment, which is the region nearest to the wellhead, and where the initial release of momentum has a significant effect on the fluid mechanical structure;

ZOEF: Zone of established flow, is the region above the ZOFE upto the location where the free surface effects begin to have significance;

Near Surface Region : is the uppermost region where the free surface has a significant effect.

- o The other studies described heretofore (by Topham, Sjøen, etc) deal with ZOEF only;
- o The theoretical studies related to ZOEF as performed by Fazal and Milgram [14] are discussed in this paper [17], and at the time of its publication (1980-81) it was meant to emphasize those aspects of the fluid mechanical structure of ZOEF which, in the opinion of the authors, had received insufficient consideration by others. But, according to Dr. Milgram (via informal communication) the results of the studies of this paper have been superseded. Therefore, their discussion would be meaningless.
- o It should, nonetheless, be mentioned that the mathematical formulations developed here were claimed to be the most complete and general. Although they too were based on the assumption of Gaussian distribution (of velocity and density), but they also included the momentum carried by the gas. The general nature of the equations (see Fig. 14 in Appendix 2.4) allowed a wider variety of conditons to be considered.

10. "Mean Flow in Round Bubble Plumes" by J. H. Milgram [7], is a very comprehensive treatment on the subject. A portion of this paper is included in Appendix 2.4 for reference.

This paper deals with the following subjects:

- o The integral plume equations (based on a principle of local similarity and other postulates as used by others);

- o Initial conditions near the bottom of ZOEF;
- o Theoretical framework for analysis of veloctiy measurements;
- o The entrainment coefficient;
- o The momentum amplification factor;
- o Plume wandering (mathematical modelling);

Due to the extensive treatment the excerpts can not be given here. Interested parties should review the referenced paper for details. Some of the conclusions and data of obvious practical significance are presented here:

- o The author suggests that by combining the semi-empirically determined functional relations between local plume properties and the entrainment coefficient (α) and the momentum amplification factor (γ) with the plume equations for velocity and density (Eqn 2.15 and 2.17 of Ref. 7), numerical solutions can be obtained without the need for a prior specification of α and γ;
- o For relatively small plumes (with ratio of plume velocity and slip velocity, U/Ub, lying between 0.9 and 2.9) previous measurements show λ = 0.8. The solution to the plume equations changes only slightly when λ changes from 0.8 to 0.9. The λ is not expected to exceed 1.0;
- o The best agreement between theory and experiment is obtained when specific values of α and γ are chosen;
- o The integral mean-flow plume equations using Gaussian radial profiles are applicable to bubble plumes over a wide range of scales;
- o Bubble slip velocity = 0.35 m/sec and gas/velocity radius ratio, λ = 0.8 can be taken as good approximations for numerical calculations;
- o For large values of U/Ub, the λ can be expected to approach a value of 1.0;

- o The entrainment coefficient (α) is not a constant. But it is found to be relatively constant for bubble Froude number in excess of 50. Very large-scale experiments are needed to confirm this;
- o The phenomenon of plume wandering (its causes and effects) could not be conclusively studied due to the limitations of the experimental set-up;
- o The available data show that the momentum-flux amplification factor (γ) is close to 1.0 when phase distribution factor (Np) exceeds 800, which would nearly always be the case for subsea well blowouts.

11. The other studies, such as I. A. Buist's "Measured Behavior of an Oil/Gas Plume Under Ice", [49], are more directly related to Arctic conditions.

2.3.9 Collector Model Studies

From a more practical standpoint a number of studies were undertaken by the researchers to evaluate and quantify the performance characteristics of a subsurface collector. These are listed in Table 2.3-36. Some salient points, observations, conclusions and the recommendations of the investigators, as excerpted from the publications, are noted below.

1. Experiments with Scale Models of Oil Collector for Subsea Well Blowouts", by J. J. Burgess and J. H. Milgram, [12, 13], and many other publications, [1, 8, 11, 16, 17, 18, etc], by Milgram et al, describes one of the most comprehensive model tests of subsurface collectors.

   The first set of tests were conducted in the laboratory using, what is described to be, a 1/15th scale model of a full size collector. The basic objectives of the tests were to evaluate various collector configurations, sizes

and proportions, and the effects of various parameters on the collection efficiency. Five different collector models (Fig 2.3-28 and 2.3-33) were tested. The second set of tests with a 1/4th scale model were carried out in Bugg Spring (a natural sinkhole) in Florida. The major objective again was the evaluation of parameters affecting the collection efficiency. However, some force and velocity measurements were also made.

Most of the analytical, laboratory and large scale model tests (in Florida) were done on the basis of Sombrero experience and measurements. Most of Dr. Milgram's findings/conclusions are meaningful. However, as his measurements from Florida tests show, it is not possible to generalize, and therefore, a unique collection system suitable for every type of blowout may not be possible. His studies do establish a good foundation and background. The double collector concept is good. The principle had already been used by Brown and Root on Arco's seepage recovery system.

His work does not get into such complex questions as to the various blowout scenarios, stage of activity/operation when blowout occurs; type of structure/debri at the wellhead and on surface; accessibility, environmental conditions, etc. Also, it does not consider over-all collection efficiency involving time elements, well life, environmental aspects, operational difficulties, etc. His studies considered mainly the sombrero principle. A straight riser was also studied. Possibility of hydrate/wax/foam formation was downplayed, or ignored. Various sizes (base vs. height) of collectors were studied with varying distances from wellhead.

The salient points from these studies are as follows:

- The objective of the tests was to quantify the parameters within which oil may be collected as it emanates from a blowing well;
- The concept of a subsea collector has been considered for a long time. But, the Ixtoc I sombrero was the first actual trial of the collection device;
- Dr. Milgram believes that sending a collector to the ocean floor would be the most efficient collection scheme. Seating and sealing of collector is difficult. Therefore the plan should be based on positioning the collector above the sea-floor.

- A collector could be installed before drilling starts in vulnerable areas.
- The experimental results showed that fraction of oil collected was proportional primarily to Froude number and phase ratio. The fraction of oil collected was also found to be independent of blowout oil flow rate;
- The shape of the collector was not important as long as all the blowout gas was collected. There is an optimum flow of gas beyond which fraction of oil collected decreases. Under many circumstances a collection system could encounter more than the optimum amount of gas. With a smaller gas volume, the fraction of oil collected was found to be higher;
- A gas separating collector (double collector) resulted in higher collection efficiency [Fig. 2.3-28];
- The most practicable and efficient arrangement was found to be equal size risers with liquid collecting from both. Increased amount of gas chokes inner collector which then passes gas only and liquid pumping takes place through the outer collector/riser using the gas escaping or over-flowing from the inner collector. This was the premise of the original concept of the double collector.

- The models (1/15th and 1/4 th) had the same general shape. The lab experiments showed that blownout oil broke down into droplets < 1 mm. dia. which then mixed with a large volume of water. They also indicated that a riser alone could collect a significant percentage of blow out. If the gas was not to be collected, a straight riser collector could be advantageous in some situations;
- The straight riser exhibited an efficiency equal to a single collector, but significant amount of gas remained uncollected with the straight riser;
- A single collector (small in size to spill some of the gas) was found to be more efficient than a straight riser or a single collector that spilled no gas;
- A concentric double collector should give the best performance, though more difficult to fabricate. In the Florida test of a double collector, the outer riser was connected to a header box which had six 10.2 cm. diameter holes at the bottom. The gas and oil collected into the header and then passed through the riser. Thus, it was not a concentric or straight path flow arrangement;
- The measured flow rates (or collected fractions) were generally higher than predicted values for the double riser arrangements. Some of the measured values for a straight riser were much higher than predicted because of increased phase ratio R (due to escaping of a part of the gas around the riser); and in the case of a single riser collector the measured and predicted values were comparable. Interestingly the variations between measured and predicted values fluctuated both in the positive and negative directions, which could not be attributed to any combination or individual values of Froude number (F) and phase ratio (R);

- The interpolation functions were developed by inputting the test data into a computer-based Statistical Analysis System. An equation for collection efficiency as a function of F and R was developed [8] which involved three constants (A, B and C). A further refinement of the interpolation function on the basis of the Bugg Spring test data resulted in a modified Froude number (F'), modified phase ratio (R') and five constants (A', B', C', D' and E'). See Appendix 2 for data. This resulted from the identification of two scale dependent phenomena;
- Dr. Milgram concluded that these interpolation equations were applicable to full scale conditions for any gas flow rate, riser flow rate and collector height (h). (How well it applies to real blowout is a subjective matter). The standard deviation was calculated to be about 8 percent.
- The most important independent variables for influencing collection performance are gas flow rate and total liquid flow rate into a collector. This was observed by Dr. Milgram in his lab experiments as well as at the Ixtoc I blowout;
- Dr. Milgram had identified 19 independent variables for dimensional analysis for model test (See OCS Oil and Gas Operations Tech. Report 1981, Dr. Milgram's paper, pp. 74), and one dependent variable. These are reduced to 4 dimensionless groups, which are subsequently reduced to 2, (F and R);
- From the foregoing analysis Dr. Milgram concluded that high percentage oil collection required adequately large F and R values. High F required high Q_T and small h. Generally speaking, the collection of large liquid flows required a large diameter riser having a relatively small total lift above the sea surface. (The term Q_T refers to total flow.)

2. "The Application of Reduced Scale Tests for a Subsea Containment System to a Hypothetical Blowout Case", R. D. Rowe and D. R. Topham, [30]:
A simple model for the flow inside the collector cone is proposed which facilitates the use of separate calculations for the flow rates in the plume and the riser pipe.

The authors believe that the Sombrero (Ixtoc I) was only partially successful because of positioning error rather than the principle. Their mathematical model is based on the similar principle.

As was theorized, observed and verified by Milgram, the collection efficiency is a function of Froude number and phase ratio. These, in turn, are functions of a combination of physical parameters of the plume, the position of the collector, and the flow in the riser.

In this paper, simple, non-integral, closed form mathematical formulas are given to facilitate calculations and to obtain a clearer physical insight into the parameters that control the effectiveness of such a device. The model is based on and tested against the results of experiments by Milgram et al. The authors conclude that for the size of blowout agreed upon at 1981 Workshop (Toronto) roughtly 4 times the size of the intermediate scale model used by Milgram (Florida test) should be all right for about 99 percent collection efficiency (as estimated by Milgram). A unit only 3 times the model size would achieve less than 90 percent efficiency. The performance of a containment system is critically dependent upon the rate of entrainment of water close to the wellhead. A 20 cm. diameter wellhead has been estimated to entrain 2 m^3/s of water. The collector size recommended for the "worst case" blowout is 7 m. base width and 0.8 m riser I.D.

The calculations and results presented by Topham et al in their paper, "Calculation of the Flow in the Marine Riser Section of A Subsea Oilwell Blowout Collection Device," [29], are believed to be valid for the flow through the riser. However, according to Dr. Topham (informal private communication), the equations for the volume of entrained water are too approximate and not usable. The other observations include:

- During the blowout the discharge is from an open pipe. The oil is finely divided into droplets so that it is easily carried by the entrained water flows;
- There are few, if any, direct measurements of the quantities of water entrained by a large scale gas jet issuing into water;
- The flow close to a blowout source may lie between that of a momentum-driven jet and that of a buoyancy-driven plume;
- The height of the collector above the wellhead effects the volume of entrained water with gas flow rate in both cases (ie. jet and plume). It is worse in the case of a buoyancy-driven plume. Therefore, the collector height is an important and controllable parameter;
- If the riser is not able to carry all the liquid phase flow rate provided by the bubble plume then a distinctive phenomenon occurs whereby two flow regimes are created within the collector (Fig. 2.3-38) which are separated by a turbulent horizontal interface. It affects the flow pattern as indicated in the Figure;
- The authors believe in the existence of a virtual origin (Fig. 2.3-38) of the plume. The Froude numbers, flow rates and the collection efficiencies, all are influenced by the location of the virtual origin which increases the characteristic length (or height) of the collector. A discussion is given in Appendix 2.

[Note: In a private communication Dr. R. D. Rowe informed that flow pattern within a collector cone were not studied by Dr. Milgram or his associates, nor anyone else. Also, no studies have been made for situations where the collector may be below the blowout source, e.g. when the blowout is from the top of a BOP and the collector encloses it partially or completely. In his analyses, Dr. Rowe has assumed that all of the entrainment of "new" water occurs between the wellhead and the base of the collector. The bubble plume continues to entrain water within the collector but this water is recirculated and does not, therefore, involve any additional water flow into the cone.

Both Dr. Topham and Dr. Rowe admit that a lot more work needs to be done to fully understand the behavior of the flow through a collector and riser system, or to be able to properly configure such a system. All of the theoretical and experimental works done so far leave a lot to be desired. In fact, one of Dr. Rowe's latest efforts has been to obtain a Strategic Research Grant from NSERC (Canada) to study the "Behavior of Bubbles at the Wellhead of a Subsea Oilwell Blowout".]

3. Per S. Teigen's paper, "Model Investigation of a Bell Shaped Structure for Control of Underwater Blowouts", [37] deals with lab tests for determining various characteristics of the blow out and its control. The author does not have much faith in the theoretical analyses for blowout plumes because of its turbulent nature and the multiphase flow.
   - o The experiments were intended mainly to study installation procedures. The model was 1/15th scale. The collector was like a frustrum of a cone with a top that could be opened or closed hydraulically. The concept was of a closed system. (Fig. 2.3-39 and 40).

Total estimated dry weight of full size = 1700 tonnes
submerged weight = 283.7 tonnes

- The test was simulated in a tank, using air and water for oil and gas and aluminum plate covered with rubber foam to simulate the seafloor.
- Suggested installation procedures evaluated were;
  1. Tow to site,
  2. Lower below surface away from blowout to a convenient height,
  3. Bring in the collector over the blowout in a sort of crow's foot arrangement using two or three tugs, and lower to its operating position.
- Lowering of the bell showed that the collector moved violently at top but became more and more stable nearer to the seafloor and sat down nicely over the blowout.
- The centering effect of the plume on the bell was found to be insignificant in comparison to the net weight of the bell in water.
- The sealing pressure tests (between bell and bottom plate) were not very accurate or conclusive due to scaling difficulties. It did appear that connecting the risers would tend to increase the pressure difference between inside and outside of the bell.
- Stability of the collector was satisfactory in the lower part of the plume. The weight and its distribution were chosen from stability considerations.
- Need for surface positioning system was found essential.
- Effects of waves and currents were as expected. Horizontal drag on the riser was a complicating factor. First order wave excitation may not be a problem. The effect of current can be calculated and accounted for in the lowering procedure.

- o Further investigation is needed for allowable pressure difference. It is suspected that lower pressure inside bell could cause flow from outside to cause erosion of soils supporting the bell and eventually toppling it (this is possible if the bell is sitting and if the seal is ineffective).
- o Geometry of the collector was found to be unimportant.
- o The paper shows scaling laws and methodology used.

4. The "Lab Experiments with Bubble Plumes", by T. K. Fanneløp [35], had covered the hydrodynamic aspects of a plume (discussed earlier) and the practical aspects of a collector system.

Some of the noteworthy observations of Fannelop included the following:

- o Sombrero was by far the simplest of many collector concepts proposed to date;
- o Fannelop considered it prudent to suspend research and testing on other schemes in this category while the feasibility and operational limitations of the sombrero was being investigated;
- o The problems with operations (deployment, positioning, lowering control, etc) are more or less the same regardless of concept. The large water mass to be handled and separated was considered to be the most unique problem associated with sombrero or any open system;
- o Subsea collection system, if successfully implemented, would be the near-perfect solution. But even the simplest systems like the sombrero are very costly and technically complex;
- o For an economical and well planned program a minimum of 5 years are needed;

- o This research effort was for upgrading the known (existing) equiment for more effective dealing with underwater blowouts.
- o It was noted that the oil released from blowouts behaves in ways fundamentally different from surface spills. The oil is in fine droplets. It has a vertical velocity. It spreads (the slick) on the surface far and thin due to a rapidly moving radial surface current generated by the plume. The oil droplets are further broken up by bursting gas bubbles. All this makes surface collection difficult in the plume region even in absence of fire. But booms and skimmers are the only alternatives presently available for continuous combat;
- o Due to thin layer, burning the oil is also not easy;
- o Chemical dispersion or absorption etc. are not very practical due to enormous quantities required, and the limitations of the equipment are aggravated further by the continuous release of the oil;
- o Chemicals could be used as a useful combat alternative for brief intervals to counter a critical situation;
- o Injection of a dispersant or other chemicals near the wellhead is considered more effective, and this experiment included that study;
- o The objectives of this study were manifold, some of which included:
  - to promote formation of a thick layer of oil for more efficient skimming and burning, by
    - o reducing amount of water entrainment,
    - o reducing turbulence level for larger oil drops and retention of oil film in boil zone,
    - o slowing down radial outflow to prevent spreading and rapid thinning of slick;

- to develop and test physical devices to accomplish the above;
  (this program did not involve the feasibility assessment of these devices).
- to study plumes in more detail with improved instrumentation and with variable geometries without confining walls;

o In these experiments it was found out that flow modification at the source was not very useful. The ring boom was also tested. A straight riser (called Bubble Guide) was tested with some success. The description makes it appear to be a very novel idea. If there was any novelty, it is not obvious. Its introduction into the plume was found to be as difficult as the bell. No other devices were considered;

o A rectifier (a hive of small tubes) was devised and tested as a turbulence damper. It was observed to be better than other types of turbulence dampers (e.g. nets, screens, perforated obstacles, etc). This was related to surface collection equipment;

o It was also noted that in actual blowouts, flow interruptions in the drill hole often occurred which caused a fluctuation in the plume flow. This meant that the collector should be able to withstand large buoyancy loss and dynamic forces. The test results indicated the density defect and rise velocity was much higher in the head region than in the steady region of the plume;

o The author philosophised that a single perfect solution for all conditions and requirements could easily become a utopian dream.

5. The model test studies done by other organizations, such as those on behalf of COOSRA/DOME Petroleum, [46, 48], were undertaken to evaluate the basic concepts of underwater collector and riser system from a feasibility point of view. The elaborate theories and exact quantification of results were disregarded. Some of the findings were interesting, although no new ideas were developed:

   - o The free bubble plume was found to be in agreement with the findings of Topham [A16], and with plume measurements made by Buist and Dickins in McKinley Bay in 1981.
   - o K. Sjøen and P. S. Teigen's observations of a flutter problem, [37], associated with flexible risers was verified. But, the flutter phenomenon and the resulting material failure was abated by choking the top of the riser, thereby inflating it. Reinforced, semi-rigid risers were found to be better alternatives;
   - o The subsea separation system was found to be impractical due to lack of prior knowledge of blowout characteristics and also the impracticality of designing a "universal" separator. The practical aspects of handling and intallation were not considered;
   - o The centering effect of the plume was measured on the surface, and moderate to weak centering forces were observed as expected;
   - o The radial (outward) flow kept floating objets away from the plume area. This, of course, applied to light objects such as buoys, floating debris, etc;
   - o The tests with reinforced and semi-rigid risers were very successful. The risers were self-centering with or without a collector at the bottom. The centering forces were weak, but there were no forces to reject the riser out of the plume;

- The gas lift was observed to operate most efficiently with minimum riser resistance;
- It was estimated that 30 x 10^6 SCF/day of gas and the associated liquids (including 70 percent water) could be handled with a riser less than 40 inches (1m) in diameter;
- It was concluded that an effective subsea containment device could be constructed using a simple vertical pipe suspended over the wellhead;
- It was recommended that gas lift dynamics (particularly allowable back pressures and limiting flow conditions), effects of riser length and diameter on flow conditions, and trials of a system closer to full scale be considered as topics for further study;
- The loads on the collector and riser from current drag (in actual conditions) were estimated to be on the order of 5kN (1, 124 lbs) only;
- The highest loads on the surface vessel (for mooring purpose) were found to be due to the interaction with ice. The mooring loads due to wind and wave were estimated to be only 1/10th of those due to ice (700 kN vs 7,000 kN);
- The concept depicted in Fig. 2.3-30 was suggested for the Arctic waters. The mooring system was found to be the most formidable item due to high ice forces;
- The overall concept was based on the use of surface incinerator for oil;
- The total cost of the riser, collector and mooring was estimated to be in the neighborhood of 8.84 x 10^6 (Canadian); and 27.0 x 10^6 (Canadian) for the incinerator;
- It was concluded that for economic and operational feasibility the system and environmental parameters should be reduced.

2.3.10 Subsea Collection System Concepts

Various studies were conducted to evaluate the technical, operational and economic feasibility of subsea collection systems. All, except one, of these studies (see Table 2.3-36) were related to the collector concepts.

1. "Underwater Blowout oil Collection", by R. H. Westergaard, [38]:

A concept similar in principle to the subsea collection bell with riser and surface support was suggested for North Sea application. It was a brief paper but touched upon some limited but real aspects of a blowout. It did not go into the details of various scenarios and situations. The author suggested an equation of Risk = Probability x Consequences, and gave a comparison between North Sea and the Gulf of Mexico to justify greater consequences from a blowout in North Sea than in the Gulf.

The collector idea was based on natural separation inside the large bell (due to difference in sp. gr. of gas and water). The gas rises through water, and oil is pumped from seabed. The gas is assumed to contain some entrained oil which could be burned off with the gas or separated by stabilizing. The collector concept also involves placement from top or crawling on seabed. The crawler-type system was envisioned to do other subsea works also.

Approximate sizes and costs were estimated. Most application was considered to be in subsea and completion related blowouts. High cost was acknowledged to be a major factor, requiring government and industry participation in a joint effort.

Details of operational difficulties are not given although they are recognized.

- The author quotes a suggested factor of 100 by which a blowout spill will be larger in North Sea as compared to other areas due to larger well reserve sizes and greater difficulties in surface containment. It is based on 10 x larger reservoirs, 5 x longer duration (life), and 50 percent less efficient surface containment and collection due to hostile environment (as compared to Gulf). In terms of money or environmental damage, the factor would be > 100.
- The subsea collection system suggested consists of a heavy semi-sub rig which can place a collection bell over the blowout orifice. The blowout is ducted to surface vessel where the gas is burnt and the oil is either collected or burnt;
- This underwater blowout collection system consists of surface vessel, a telescopic bell and a riser hose. A flare tower is provided. The bell has a skirt to embed into seafloor for sealing. The bell is 8 m wide x 10 m. high. The submersible rig (containing bell) may crawl on the sea bed. The bell will have open hatches in the top during the placement, and operate with ambient water pressure inside. The difference in sp. gr. between gas and water is assumed to give enough force to separate oil and gas and to bring the gas to the surface through a flexible hose. Underwater pumps may be needed to bring the oil up. Gas will be flared. If safely degased, the oil may be collected and transported, otherwise burned;
- The submersible rig (Fig. 2.3-7) will be used to carry and place the bell on blow out;
- The weight and size of the proposed rig is 1,600 tons; 32 m. long x 21 m. wide;

- o The rig would be unmanned and remotely powered and controlled via an umbilical;
- o This rig could be designed for other underwater work to justify its cost;
- o Probability of application is taken to be 70 percent, mainly due to high probablity of blowout risks associated with subsea completion systems;
- o Cost and Duration:
  At least 25 million (1977) and 3-4 years time;
- o Status
  Development in early stages (in 1977). Building it has not been justified. Joint industry and governement effort needed;

In reviewing the other aspects of subsea blowouts the author states:

- o Gas blowouts are more common and often stop without causing damage. Oil blowouts may also stop spontaneously, choking themselves with sand and rock from the formation. This is called "Bridging".

Blowout Combat:

a. Drenching the platform on fire;
b. Capping - replacing the damaged wellhead and closing the well;
c. Relief wells, and killing the well by filling it with heavy mud from bottom. Highly productive wells with very high lifting capacities are difficult to cap or kill. The mud can be blown away. And multiple relief wells could take as many as 500 days (in North Sea conditions) to kill.

- o Average North Sea well produced > 20,000 bbl./day
  Open hole blowout may produce 100,000 bbl./day.
  (Total spill from Santa Barbara blowout: ≅ 90,000 bbl.).

- o The author lists many known and probable consequences of a blowout in the North Sea. In discussing the risk as a function of probability and consequences (both measured in the same unit), he points out that risk may also include human values and emotional factors.
- o Westergaard suggests that a blowout defense system should include:
  - A proper, permanent organization
  - Fire-fighting vessel
  - Stocks of relief well drilling equipment and supplies
  - Underwater blowout oil collection system
  - Ocean going heavy surface containment system
  - Booms and skimmers
  - Coastal protection and clean up.

Westergaard's Universal Bell was not described in any detail in this paper. In his paper, "Countermeasure Developments for Offshore Drilling in the North Sea", [41], he outlined the improvements that had been made to the original concept. It was modified such that the subsea component had the shape of a catamaran (Fig. 2.3-8). Other basic principles remained the same.

2. <u>"A Concept for Containment of Petroleum from Subsea Well Heads", by Kjell Sandaker, [43]</u>:

The Norwegian Underwater Technology Center (NUTEC) proposed a Teacup concept (Fig. 2.3-32) which is a closed bell shaped collector and which can be used as a chamber (at 1 atm. pressure) to perform routine dry intervention on subsea wellheads also. It is claimed that deployment and positioning problems become easier due to design.

The system seems to have its limitations which can preclude its application (even in theory) during drilling and development phases.

The other comments about the concept are as follows:

- o Fig. 2.3-32 depicts the concept of the TEACUP as atmospheric dry intervention system.
- o Fig. 2.3-32A shows the installation of the TEACUP for atmospheric intervention.
- o Fig. 2.3-32B/C illustrate its installation during blowout, and Fig. 2.3-32D is a proposed test set-up and facility.
- o The economic justification for the TEACUP concept comes from the premise that diverless wet subsea systems have not been very successful, and the manufacturers have not been able to convince oil companies that dry 1-atm systems are the solution. Therefore, if an added incentive of subsea containment is provided, NUTEC believes, the oil companies might accept it;
- o The TEACUP concept would require new wellhead equipment to be designed for it, and the existing ones may have to be modified (which is not very economical);
- o The paper describes the method for deploying and positioning the collector over the blowout. It makes it sound very easy. However, the approach may be practicable with some refinement (such as use of some means to locate the well and guide the bell);
- o Teacup concept has not been tested or used in full scale so far. A test is therefore must before going any further.

3. <u>"A Collection Bell Which Mates a Special Base Plate Receptacle", by R. H. Westergaard, [40]:</u>

The paper presents probabilities of underwater blowouts on the Norwegian Continental Shelf over 20 years. Although the probabilities may not be directly applicable to US

waters but the formulas should be valid. However, the data pertaining to the probabilities of blowouts and the related information are not excerpeted here. If needed, the referenced publication may be consulted.

Westergaard presented his evaluations of five types or concepts of collecting devices. These included:

- The Universal Bell (sealing on the seabed), Fig. 2.3-8;
- The Sombrero, Fig. 2.3-20/21;
- The Bell (mating with a special base plate), Fig. 2.3-34;
- Midwater collection (not feasible)
- The Pre-installed Bells (too expensive and impractical);

The operational problems considered in this evaluation were the common type, such as transportation, deployment, installation, station-keeping, abandonment, etc.

In giving his evaluation of the concepts Westergaard states that:

- The concept of Universal Bell is the most sophisticated. None of the concepts has progressed beyond the desk stage. Some model tests have been done. The equipment will necessarily be complex and expensive.
- The Sombrero is considered to be the simplest; can be used over any type of subsea system/structure; generally the seafloor debri may not be a problem; and the equipment is relatively simple and inexpensive.

  The shortcomings include too much water flow, low efficiency, difficult separation, positioning difficulty; station-keeping problem, hazard of blowout and fire to surface vessel, etc.

The sombrero needs to be secured to the seafloor in deep waters.

- The collection bell is a hybrid between universal bell and pre-installed bell. It is simpler to position, can tolerate internal overpressure, needs no pump or oil/gas separator or sensitive pressure control. It can be inexpensive.

For the requirements of the bell, receptacle and guide wires, the riser, the surface vessels, the operational tasks and general discussion, see pp. 231-236 of the reference. As can be seen from the description, this too is quite sophisticated.

4. "Containment of Naturally Occuring Subsea Hydrocarbon Emissions", by L. D. Guthrie and P. R. Rowley, [57]:
This is the description of the Arco Seepage Oil Recovery System. The authors state that the recovery systems have effectively curtailed 50 percent of Santa Barbara County's atmospheric hydrocarbon pollution.

These structures are the largest ever constructed for such application. These are also the first permanently installed structures.

A few pertinent features and data are also given in Section 2.3.6.

5. "Damage Assessment of Oil Spills from Subsea Blowouts", by G. Fredrikson et al, [44]:
In this paper the authors have presented the approach for cost-benefit evaluation of underwater collection vs surface based counter-measures. The assessment of benefit is taken

in terms of damage reduction and the efficiency of the collection system. In comparing the conventional surface collectors, dispersants and underwater collectors it is concluded that mechanical surface collectors with 20 percent efficiency can be effective, the dispersants are not (for the assumed blowout scenario of 500,000 ton blowout lasting 100 days), and the underwater collector would be cost-effective only if its collection efficiency is more than 70 percent.

Practically the entire paper is devoted to history of blowouts and the cost and effect of damage resulting from them. Hypothetical spills (from a blowout) and the ecological damages are then taken for cost-benefit evaluation.

6. "Subsea Containment", by T. A. Robinson, [54]:

This was a short paper but the concept of a ship- mounted subsurface collector system presented by Capt. Robinson became the foundation stone for some very important studies. It became the center of the concluding discussions at the end of the first Subsea Containment of Oil Workshop in Toronto in 1981, and was accepted to be the concept to be carried forward.

In Robinson's paper itself, fire fighting was one of the major topics of discussion. The emphasis was placed on the feasibility of designing a large tanker solely for the blowout response, having very sophisticated fire fighting capabilities and highly trained crew, and displacing the fire by the tanker through the equivalent distance of its beam.

The cost of such a tanker was estimated to be over 60 million, and needed to be shared or subsidized by the governments. Also, the multiple uses of the tanker were suggested to make it more cost-effective.

The need for detailed study of blowout fires and its effects was underscored.

7. "A Study on the Feasibility of Underwater Containment of Subsea Oil Spills in Arctic Waters", by K. W. Chen, [55]: Undertaken on behalf of various industry and government agencies (such as COOSRA, Dome Petroleum, and EPS) this was rather a comprehensive study prior to Ixtoc I blowout.

The objectives of the study were to determine the feasibility and praticability of:

- o containing the oil from a subsea well blowout at or near its source in deep or shallow water, and
- o collecting the oil to prevent it from reaching the surface.

To that end a literature search was performed for a critical review of the then current state of technology of underwater containment systems and recommended methods that were considered feasible.

Three hypothetical blowout scenarios had formed the basis of this study. These were as follows:

Location	Labrador Sea	Lancaster Sound	S. Beaufort Sea
Approx. Water Depth	656 ft.	2,526 ft.	50-330 ft.
Oil flow rate	15,000 BPD	6,000 BPD	5,000 BPD
GOR	848	17 (50 percent hydrates)	802

Other Study Parameters

- o Blowout assumed to occur at the end of the drilling season;
- o At the time of blowout the blowout preventor (BOP) was in place on the seabed;
- o The drilling vessel had moved off the location;
- o The blowout discharge was from the center of the BOP;
- o The drill collar might be broken and lying on the seabed;
- o The formation may have ruptured, resulting in the fracture extending to the seabed at a distance away from the well;
- o System availability deadline - 1982.

Fourteen (14) different concepts were studied using some basic selection/evaluation criteria of collection, storage, disposal, environmental constraints, simplicity of design and construction with proven technology and hardware, established methods of transportation and deployment, unmanned operation, and recoverability for reuse. The concepts were grouped into three categories:

1. Rigid Underwater Containment Devices
2. Collapsible Underwater Containment Devices
3. Enclosed Underwater Containment Columns

The 14 concepts studied by Chen were the Item Nos. 4, 5, 7 to 10, 12, 14, 17 to 20, 23 and 28 in Table 2.3-1. The Underwater Collector Burner System (Item No. 28) was the concept developed by Chen as a part of these studies. Due to the specific requirements of the Arctic region only three other concepts (Item No. 5, 17, and 18) were evaluated in detail.

This was the first known study of its kind and was undertaken on behalf of AMOP.

The Underwater Collector Burner (UCB) was concluded to meet most of the required conditions. The Sandome was considered to be a viable alternative, particularly in deeper waters where

anchoring of the surface structure of the UCB became impracticable. The Sandome's size, however, was found to be its major limitation.

The UCB was recommended for further development.

8. "Offshore Blowout Control", by Otter Group [42]:

This is a report on the most comprehensive study known to have been undertaken on the subject of blowouts. It covers such divers subjects as the projected activities on the Norwegian Continental Shelf (NCS), the statistical analyses of frequencies and probabilities of blowouts together with its consequences and all possible countermeasures.

This study actually synthesized a much broader effort in Norway dealing with blowout control. During this project all the institutions already involved in related studies were contributors. Thus, it took advantage of the existing technology and built further upon it.

The responsible institutions in this study were:

- Det norske Veritas (DnV)
- Scandpower A/S
- Central Institute for Industrial Research (SI)
- Norwegian Hydrodynamic Laboratories (NHL)
- The Foundation of Scientific and Industrial Research (SINTEF)
- The Norwegian Institute of Technology (NTH).

The project was initiated by Statoil, but financing was also provided by NIFO, PFO and the SSB program.

The broad categories for the study included:

- Projected/anticipated activities on the Norwegian Continental Shelf during 1980-90.

- o Probability of offshore blowouts;
  - Frequencies of blowouts (US OCS, Gulf of Mexico and North Sea)
  - Blowout Consequences
- o Blowout control/containment;
  - methods and equipment
  - natural processes
  - safety aspects
  - effects on the design of platform and other systems
  - evaluation of ideas
- o Subsurface collection systems;
  - existing and proposed methods
  - hydrodynamic aspects of the blowout
  - evaluation of ideas
- o Cost-benefit evaluation;
  - risk, probabilities and consequences
  - collection devices
  - blowout risk reducing devices

- The main purpose of this project was to classify and evaluate all available concepts (to the point in time) for well control and oil collection in case of an underwater blowout, and suggest priorities for further work.

  In the section dealing with the subsea collection of oil, the basic intent was to evaluate the large number of ideas and concepts of collection devices that had been put forth. It was soon discovered that all the devices (except the Sombrero, the Arco Seep Recovery System and the Plastic Canopy) were preliminary proposals lacking necessary details for a meaningful evaluation. Consequently, the concepts were divided into groups based on their underlying principles, and the features of these groups were examined.

The Otter Group had reviewed a total of 37 ideas/concepts. They included Item Nos. 4, 5, 7-10, 12, 14 16-22, 24-40, 52-55, and 57 in Table 2.3-1. The diagramatic representation of some of them is included as identified by Figure numbers in the above-mentioned Table. Out of these, only 17 are described in the Otter report as identified by their Item numbers below.

The grouping of the ideas and their major positive and negative attributes were as follows:

Group 1. Surface Containment Devices

(Item Nos. 16, 24, 33, 52 and 54 in Table 2.3-1)

Advantages: Collect gas; restricts radial outflow, and are potentially assisted by centering effect of the fluid flow.

Disadvantages: Large structure; difficult to transport and deploy; highly vulnerable to environment, must be anchored, directly exposed to fire; unsuitable for deep waters; and low collection efficiency.

Group 2. Containment Devices in the Plume

(Cylindrical and funnel shaped, Item Nos. 27, 31 and 37 in Table 2.3-1)

Advantages: Comparatively smaller than Group 1 due to smaller plume spread and flow rates.

Disadvantages: Basically same as for Group 1 except that these are not exposed to fire.

Group 3. Containment at the Spill Source

(Bell-shaped rigid devices, rigid containment columns and cylinders, flexible containment columns and cylinders; Item Nos. 19, 21, 25, 28, 32, 34, 35, 39 and 55 in Table 2.3-1)

Advantages of Bell-shaped rigid devices:

Restrict or eliminate water entrainment by enclosing the well; much less affected by environmental loads; require none or minimal anchoring; smallest in size; reduce the amount of fluid to be handled; least affected by water depth; and if completely sealed with the seafloor they permit production quality oil collection.

Disadvantages: Difficult to maintain during use, have limited ability to withstand pressure differential; require sophisticated pressure monitoring, vulnerable to unstable and sluggish flows, restrict access to the wellhead; and some are difficult to move temporarily.

Advantages of rigid containment columns and cylinders:

Guides the fluid flow to the surface facilitating the use of surface containment; reduces water entrainment; and allows for sealing on the sea floor.

Disadvantages: Difficult to transport and position; greatly exposed to environment; require heavy anchoring; prevent access to the wellhead; their sizes are depth dependent and normally bulky and heavy.

Advantages of flexible containment columns and cylinders:

Easy to transport; relatively inexpensive; and capable of reducing or limiting water entrainment.

Disadvantages: Require heavy anchoring; relatively fragile under violent motions and flow forces; restrict access to the wellhead; difficult to install; and their sizes are dependent upon water depth and flow rates.

The costs and collection efficiencies (theoretical and estimated) of the seventeen devices identified above are also listed in the report. The Floating Tank (Fig. No. 2.3-25) is listed as the cheapest (NOK 30 x 10^6) and the self-propelled vessel (Fig. No. 2.3-24) as the costliest (> NOK 200 x 10^6). The collection efficiencies given are not specific. The bell-shaped rigid devices are adjudged to be the most promising. The installation of the collecting device is identified to be the main problem, and the attainment of effective sealing on the seabed remains the most important item to be explored.

Preinstalled devices (for convenience of installation) and the sealed devices completely enclosing the wellhead are given highest priority in most of the Norwegian studies.

The cost-benefit analysis is rather comprehensive, and takes into account many scenarios and other aspects of a blowout, such as:

- Risks, probabilities, consequences, risk reduction and cost;
- Type of operation at the time of blowout;
- Size of blowout and amount of spilled oil;
- Collection devices and their performance and cost.

Although the Otter Group report de-emphasizes the concept of a ship-mounted subsurface collector system (open type), the other data and information contained in it can be valuable for the development of such a system.

9. "Subsea Blowout Containment System - Concept Analysis", by German and Milne, [5]

This study was undertaken by German and Milne for the Environmental Protection Services (EPS) of Canada, and was one of the major followups to the 1981 workshop in Toronto. The report was best summed up by K. M. Meikle at the 1982 workshop in Oslo as follows:

Objectives:

1. To determine whether or not the concpet of using a suitably modified tanker of approximately 100,000 tonnes to deploy and operate a collector and riser system is operationally and technically feasible and, if so;
2. To specifiy the capabilities of the equipment and systems that would have to be installed on board, and;
3. To describe the current state of development of the technology required for each equipment items and the various systems.

Tasks to meet the objectives:

1. Idenfify and analyse the operational and safety problems that would have to be overcome for such a ship to enter the plume area over an underwater blowout; deploy a collector and riser system, and remain in position for perhaps several months processing and disposing of the collected oil, water and gas: The blowout was defined as 4770 m^3 (30,000 barrels)/day of oil accompanied by about 765,000 m^3 (27 x 10^6 SCF)/day of gas occurring in ice-free waters no deeper than 200 m.
2. Specify the special-purpose equipment and system that would be required either by law or by at least one of the major underwriter/classification societies to overcome the identified problems.

3. Describe the current state of the technology required for each of the specified equipment and systems and, if it does not exist or requires potentially difficult improvement or adaptation, provide an engineering opinion on the probability of success.

Assumptions

1. A collector and riser assembly has been designed.
2. Free gas will be separated from the liquids in the collector.
3. The collector will be a cone-shaped steel device approximately 10 m. in diameter by 15 m. high and will have an anchoring arrangement to hold it in place against the forces imposed by the plume and the marine environment.
4. The riser will be a sectionalized multi-conduit device including at least two 60 cm. diameter ducts (one for free gas and one flowing predominantly fluids).
5. An onboard processing plant has been designed that provides the required control over riser flow; separates oil, gas and water; discharges the water overboard; flares the gas; accumulates the oil and periodically discharges it to a lightering tanker.
6. The ship would be equipped with both a multiple anchoring system and a dynamic positioning system, enabling it to remain within position-keeping tolerances at the same limiting weather, ice and sea state conditions that apply to drilling.

An Abstract of Study Results:

1. The literature search produced very little directly applicable information.
2. The reduction in water density (and hence buoyancy) caused by the gas bubbles in the plume area is negligible - a matter of only a few percent.

3. The width of the plume at the surface is about 15 percent of the water depth (30 m. if the water is 200 m deep).
4. A major source of danger to a ship is the presence of a froth layer that forms above the main body of the plume. Estimated froth heights of some 10 m. have been reported, and sinkings have been attributed to slow flooding resulting from froth penetration of open or inadequately sealed hatches.
5. Dangerous gas concentrations with an ignition temperature as low as 206°C can be expected in the vicinity of a blowout.
6. Quantified heat profiles for oil and gas fires could not be found but it would appear that temperatures as high as 2000°C could be encountered. Skin temperatures approaching the annealing temperature of mild steel have been measured adjacent to a crude oil fire (Buist, 1981).
7. At least one major modern vessel, the IOLAIR, is equipped to operate in a blowout situation.
8. Officials of Lloyd's Register of Shipping agreed that there was no apparent reason for considering the concept of using a suitably modified tanker as impractical.

Summary of Main Conclusions:

1. Vessel stability and seaworthiness will not be significantly affected by the disturbances and emissions associated with the postulated blowout.
2. Special measures may be required to prevent flooding.
3. Air inlets for ventilation systems and combustion equipment will have to incorporate automatic emergency mechanisms for protection against toxic and explosive gases.

4. Provision must be made for the safe withdrawal of the ship in a potentially dangerous situation such as a power failure; in the interim, at least the occupied areas and potential ignition sources will have to be effectively protected from toxic, inflammable and explosive gases.
5. The deliberate and discrete entry of a prepared ship into a blowout situation is less hazardous than the operation of a drillship or rig that is exposed to the possibility of a sudden and unexpected blowout as a normal condition of operating.
6. Structural cooling will be required in areas that could be exposed to high temperatures.
7. The operational concept is practical.
8. Current Lloyd's rules and regulations can be met.
9. The required protective equipment and systems are available and at least one comparably protected vessel has been built.

Some more specific comments, conclusions and their background are also noteworthy:

- Although the study was limited to the tanker, the investigators touched upon some of the design and operational aspects of the total collection system also.
- A plume analysis (velocities, plume widths and density defects) by Dr. J. H. Milgram had provided the necessary input to the study. (Note: Those analyses, apparently, are no longer valid, and need to be revised.)
- Lloyd's Register had provided a list of provisional Rules that would have to be complied with.

It was concluded that:

- The tanker modification was the state-of-the art, and much of the equipment was off-the-shelf.

- o The drenching equipment and fire-fighting monitors and the techniques for their effective utilization needed further investigation.
- o Accurate positioning of vessel and capping equipment needed further study. The sonars were considered useless due to blowout noise.
- o From the standpoint of ship, crew safety and general ship handling, the concept was considered practical.
- o The dangerous gas, with or without fire, was recognized as one of the most critical safety problems. It was also realized that the ship could not be made completely explosion or fire-proof (economically or practically). Therefore, its fast and safe withdrawal would be a primary requirement.
- o From the point of view of economics the costs of special features for a low utility vessel could be a negative factor. Therefore, cheaper alternatives needed to be provided. The quick disconnect feature was considered a must.
- o The remote handling of the collector and riser was suggested.
- o Displacing the fire by placing the tanker over the fire zone (as suggested by T. A. Robinson) was considered a viable approach.
- o In general, the techniques rather than the hardware were found lacking confidence.

10. <u>"Containment of Oil and Gas from a Subsea Blowout - Operational Feasiblity", by Det norske Veritas, [6]:</u>

This study was carried out by VERITAS in 1982-83 for the Norwegian Oil Pollution Control R and D Program (PFO), and was technically in parallel with the tanker study by German and Milne for the EPS, Canada.

It is a very comprehensive study of various methods for containment of oil and gas from a subsea blowout with regard to operational feasibility. The study mainly evaluates systems included in the Otter Group report [42], and concentrates on the principles rather than the specific systems.

Initially, methods for surface containment, containment in the plume and containment at the spill source were included. A preliminary elimination phase concluded with elimination of surface and plume principles for the criteria chosen. This was mainly due to the depth. In shallow waters they may have a potential; and even for deep water, if a low (or very low) collection efficiency is considered useful.

The main body of the report concentrates on containment at the spill source. The various principles for open and closed systems for containment at the spill source are evaluated with regard to the operational phases involved.

The evaluation takes into account criteria such as: installation time, environmental limitations, accessibility, reliability, maintainability etc. Also the study takes into account such factors as expected cost, need for new technology and need for changes in the seabed structures.

In a broad sense the study concludes that:

- Accessibility and guidance/reception are key to a successful installation of seabed containment systems.

- Both the closed and open systems, seem to have a potential as combat equipment in a subsea blowout situation.

- o If extensive changes in the seabed structures can be accepted the best solution is doubtlessly a closed system at seabed with closed surface separation unit. But this requires extensive adaptation at the blowout source and can only be used on wells prepared for such operations.

- o Considering todays situation, an open seabed system seems to have the highest potential using a small inlet funnel, a large diameter riser and using the existing guiding system (probably with minor modifications). A major problem is collection efficiency.

- o This report is a limited study and a lot of research and testing will have to be carried out to solve the problems associated with to the above methods.

As criteria for the evaluation, an operational water depth down to 1,150 ft (350 m) and North Sea conditions are chosen.

The various containment principles are depicted in Figures 2.3-41 through 2.3-47.

Some of the highlights of the report are given below. These are the observations made and/or the conclusions reached by the investigators:

- o Inspite of numerous theoretical and model test studies (follwoing Ixtoc I blowout) no method has yet been identified as a satisfying solution.
- o The blowout scenarios vary. Therefore one solution is not the answer for all.

- The main elements of a blowout containment system development are:
  - establishing requirements
  - riser design criteria
  - transport/treatment of collected oil and gas.
- The riser is most important element because it heavily influences:
  - the handling of collection unit
  - the positioning method
  - the underwater support
  - the flow transport

Various types of risers are shown in Fig. 2.3-45.

- As stated earlier, the containment at the spill source is the only viable approach, and in terms of its general principles it can be classified as (Fig. 2.3-41):
  - closed system
  - open system (sombrero type)
- Fig. 2.3-42 shows examples of containment at the spill source. In principle the bell-shaped units can be any shape as long as they provide a cover or entrapment for the wellhead structure.
- The installation principles for bell-shaped devices include:
  - bell positioned from surface vessel
  - bell positioned by remote control
  - pre-installed
- For positioning of the bell the method may:
  - use guidelines
  - do not use guidelines (Fig. 2.3-43)

  The guidelineless techniques are well-suited for deep water operations, and are extensively used in deep water drilling. They are faster but more weather (heave) sensitive. On the other hand, a guideline system in a blowout situation would be impractical.

- Extensive support systems are needed for all concepts. They include:
  - Transportation
  - Installation
  - Separation and Processing
  - Burn off
  - Transport of oil
  - Subsea intervention
- The main parameters of a blowout scenario are:
  - Accessibility
  - Water depth
  - Flow characteristics
  - Environmental conditions
  - Bottom conditions
  - Distance from the operations base
  - Probability of complex structures surrounding the wellhead.
- The evaluation parameters include:
  - Water depth capability
  - Positioning of collection unit under severe blowout conditions
  - Probable or achievable collection efficiency
  - Ability to operate under severe environmental conditions
- For collection at the spill source:
  - The rigid column approach is considered unfeasible mainly due to size;
  - The flexible column requires free access to the source; is difficult to handle in deep waters; and hard to keep in position due to external forces. Nevertheless, it is considered to have better potential but needs further investigation;
  - The collection bell also assumes free access to source; it is not affected by water depth as much

as other two concepts; it is difficult to handle; less susceptible to environmental forces; and easier to maintain position although difficult to position initially.

- o The collection/separation systems may consist of:
  - Closed system with separation at seabed;
  - Closed system with riser and separation at the surface;
  - Open system at seabed.
- o The operational concept is based on using an auxiliary support vessel for the handling of the collector separate from the process facilities. The concept assumes that a surface vessel is not mandatory. It is taken to be optional or an element in the concept development. It assumes that a collector system may or may not utilize a surface vessel. The separation equipment is visualized as a compact floating system serving no other purpose.
- o The stability of the collector due to high velocities in the jet zone is recognized to be critical, but it is considered too large a problem to be analysed in this DnV study. A guiding or anchoring system is considered necessary for entering the jet zone.
- o Among the open type collector concepts, the "Sombrero" type is judged to be the simplest and most preferable. For the closed system, the assumption is made that the seabed is already prepared to receive the collection unit. Water entrainment is not allowed. The concept of a closed system is recognized as being not very practical except as a last resort, or if it becomes a regulatory requirement. Also, this concept is not applicable to wellhead situations during exploratory drilling. A very clean and flat wellhead area for seating and sealing is imperative with a closed system.

- The technology for running stiff risers already exists. The question may be of size, length, time and blowout condition. The articulated riser is unproven, and may be difficult to adapt to large diameter conduits.
- The flexible riser is easier to handle and better for station-keeping, but unproven as a riser. A lot of development work is needed, especially because of size.
- The plume has been found to give a centering effect to the riser provided the flow is allowed through it which is difficult during installation. Also, exact centering would be virtually impossible due to current and plume forces.
- DnV Evaluation:

  - Closed system is technically the best but very costly;
  - Open system has a marginal over-all advantage;
  - Flexible riser has greater potential but stiff riser is proven;
  - Installation from surface with negative buoyancy preferred;
  - Provision of thrusters could make it better;
  - The subsea reception system preferred is one without special reception unit and utilizing existing guiding strucutre (not guidelines) with minor modifications.

  Separation:

  Closed system at surface is the best. However, with an open collector, open system at surface will have to be selected.

  Surface support: a special unit is preferred.

  Overall: <u>The closed system is marginally better</u>, but it is not clear cut. In fact, the evaluation is very subjective and the results can change.

Note: The report points out many problems, difficulties and their causes. But it does not offer the solutions. Also, in evaluating any systems, methods, operations, or concepts, the report enumerates various evaluation factors, but does not provide the details of the evaluation itself. It does recognize, though, that the concept evaluation has to be based on extrapolation from experience and engineering judgment.

Some of the principles studied are purely academic having no practical significance. The question of locating the wellhead is conspicuously absent. The comments on accessibility to the source, and adaptability, seem to lack practical considerations.

Notwithstanding, it is a valuable reference to any engineering effort aimed at developing a subsurface collector system.

2.4 New Concepts

The foregoing discussions have covered almost everything that is known about subsurface collector systems.

In a real sense there are no "Existing" and "New" concepts. All the concepts can be called "existing", and they have already been described in Section 2.3. Since no unpublished and newly developed ideas have been found (other than those listed in Table 2.3-1) there are no "New Concepts" to be reviewed.

2.5 Conclusions of Review

2.5.1 General Observations/Findings

During the literature review a number of observations have been made which provide an insight and awareness of the status of such studies. This knowledge is important to anyone seeking to

apply the results of these studies towards the development and judicious evaluation of a practical system or concept.

- o There is an abundance of literature on the subject, and an impressive amount of research work dealing with hydrodynamics of blowouts, collector concepts and model tests has been carried out.
- o The most pertinent studies are:
  - Dr. Milgram's model tests on collector;
  - Collector installation tests by Teigen in Norway and COOSRA sponsored tests in Canada;
  - The tanker study by German and Milne (for EPS);
  - Plume, flow and riser studies by Topham et al;
  - Collection system concept and blowout studies by Otter Group and the VERITAS.
- o The hydrodynamic behavior of the blowout is not fully understood, nor is there general concurrence among the researchers inspite of the commonality of the basic theory used by all. There are disagreements on theoretical as well as experimental findings. For a practical system, however, some of these disagreements are only of academic value since they neither can be assessed or controlled economically, nor do they contribute much towards the containment problem.
- o The model tests on collector installation have revealed two significant parameters:
  - that the centering effect of the plume (on the collector and riser) is insignificant to mild; and
  - the plume forces on the collector close to the wellhead are moderate.

  Other anomalous conditions (fire, weather and debri, etc) have not been simulated.
- o The discrepancies between different findings can be attributed to individual approaches, personal opinions, accuracy of modelling and simulation, the total

experimental set-up, methods of measurement, and the quality of data reduction and interpretation. For example, the confines of a test tank can significantly alter the nature of a simulated plume than what could be observed in a real blowout situation.

- Inspite of lack of general agreement about what may be called the best collection system concept or design, the ship-mounted open collector system (Sombrero type) has received the maximum acceptance.
- The Norwegian researchers/investigators, who have contributed the most to these studies, tend to favor a closed collector providing a sealing on the ocean floor. They appear to give much higher priority to the net effectiveness than the practicality of the concept or its over-all economics.
- The practical experience with the collection or containment of a subsea blowout is limited to the "Sombrero" on the Ixtoc I, which is also the biggest and the longest lasting blowout to date.
- Disregarding the degree of success of the "Sombrero", and putting aside its political implications, it is safe to say that it provided a lot more data and information than all the studies combined. It had proved the viability of a subsurface collection system.
- The technical feasibility of a subsea collection system has been generally accepted; but the operational aspects remain as major hurdle.
- The economic considerations also are major deciding factors. The probability of under-writing the cost through alternate uses of the system can be a very attractive proposition.
- The blowout statistics have been found to be inadequate to influence the decision in favor or against the development of a collection system.

- All major developmental activities in the area of subsea containment of blowouts seem to have been put on hold in Canada and Norway.

2.5.2 Status of Technology

In view of the general observations from the literature review and the knowledge of the practical offshore operations, the status of technology, as it applies to subsurface collection of blowouts, can be reasonably assessed. It should be noted, though, that:

- Offshore operation is as much an art as it is a science.
- Almost every offshore project is unique, even though it may appear to be routine type.
- All offshore characteristics and parameters can not be accurately simulated, modelled or scaled. Therefore, in such situations the laboratory tests can be qualitatively more significant than quantitatively.
- In almost every new venture some risk is immanent.
- Due to the uniqueness of offshore projects, the methods, equipment and hardware are almost invariably improvised to suit the requirements. Therefore, a new system or component may evolve out of the existing technology for each application, yet it may not be an off-the-shelf item or be commercially available.

In view of the foregoing comments the status of technology can be summed up as follows:

- Gas lift is an old science and has been used extensively under artificial conditions to lift large quantities of water for water injection, flooding and cooling towers. The practical ramifications of gas lift phenomenon from a blowout can be considered to be within the realms of existing knowledge.

- From the system and hardware point of view most of them either exist or can be developed from the existing technology. The riser, tanker, process and separation, lightering and transfer, fire fighting and safety systems - all are considered commercially available in the sense that they can be produced even though they may not be off-the-shelf items.
- The collector is not a completely proven item, but enough theoretical and practical knowledge exists for its design. Moreover, being a simple, unsophisticated conical structure, the collector can always be modified as needed.
- The technology and hardware for locating the blowing well and for positioning the collector also exist; but they have not been proven in actual blowout situation. However, there is ample confidence that the system can be made to work. In fact, as long as the adverse effects of the gaseous plume are avoided (or beneficialy utilized) the locating and positioning system can be considered to be proven. The accuracy of these devices is excellent. For example, the positioning accuracy of less than 5 ft was achieved during the installation of Exxon's Lena Guyed Tower (1,078 ft tall, 120 ft square base and weighing 28,000 tons) in 1,000 ft water depth. The required accuracy was 25 ft. radius.
- The best evidence of the existence of components and hardware is provided by many floating production systems (FPS) that have been in operation for a number of years in various parts of the world. Although there are many floating or mobile systems acutally installed using semi-submersible vessels or barges as the surface support, there are at least six FPSs that use tankers (five of these are described in Table 2.5-1).

  The use of moored tankers as permanent floating storage facilities at offshore oil fields started in the mid-1960's. However, the first Floating Production Storage

TABLE 2.5-1

TANKER BASED. FLOATING PRODUCTION SYSTEMS

FIELD NAME	CADLAO	CASTELLON	GAROUPA	HONDO	TAZERKA
DEVELOPMENT TYPE	MARGINAL	MARGINAL	EARLY PRODUCTION	EARLY PRODUCTION	MARGINAL
LOCATION	Phillipines	Spain	Brazil	California	Tunisia
WATER DEPTH (FT)	310	384	544	490	460
DESIGN PRODUCTION CAPACITY (1000 BOPD)	30	20	70	45	20
G.O.R. (SCF/BBL)	450	120	N.A.	580	LOW (Mostly CO_2)
WATER PRODUCED (BBLS/D)	40%	50%	N.A.	8%	N.A.
SULPHUR %	N.A.	0.2	N.A.	YES	N.A
H_2S (PPM)	2260	N.A.	N.A.	100	NONE
WAX	N.A.	N.A.	N.A.	NONE	N.A.
SEPARATION STAGES	2	N.A.	2	2	N.A.
GAS DISPOSITION	Boiler Fuel & Ground Flared	Boiler Fuel & Incinerated	Pipeline from Platform	Pipeline to platform to shore	Vented
GAS LIFT	N.A.	N.A.	Yes	Yes	N.A.
PRODUCED WATER DISPOSITION	Treat & Dump	N.A.	N.A.	Injection Wells on Platform	Provisions for Dump Overboard
OIL STORAGE (BBLS)	720,000	420,000*	350,000	210,000	N.A.
RISERS	Flexible with Sub-surface Buoy	Flexible Clamped to Chain Links	Hoses to CALM	Ext. Piping Jumper Hoses & swivels	Internal Piping
NUMBER/TYPE OF WELLS	2	1 Below Tkr 1 Satellite	7 Satellites	20 (Platform)	8 (Max) Satellite
DWT	65,000	N.A.	N.A.	50,000	210,000
EXPORT BY	Shuttle Tanker Bow Moored	Shuttle Tanker Along Side	Pipeline	Shuttle Tanker Bow Moored	Shuttle Tanker Along Side
DATES OF PRODUCTION	1981 to Present	1977 to Present	1979 to Present	1981 to Present	1982 to Present
FIELD DEVELOPMENT COST (MILLIONS OF US $)	37	15	252	402 (Incld. Platform)	200 (Approx).
OPERATING COST (THOUSANDS OF US $/DAY)	15	10	50	N.A.	N.A.
LEAD TIME - START DESIGN TO FIRST PRODUCTION (MONTHS)	18	11	41	N.A.	26

*Oil & Water Storage

N.A. = Not Available

0349X

and Offloading (FPSO) system went into service in 1977 in Shell Oil Co.'s Castellon field (see Table 2.5-1 and Fig. 2.5-2). In 1979, a tanker was converted to a floating production facility for use in Petrobras' Garoupa field. The newest tanker-based FPSO systems include the Cadlao (Fig. 2.5-3) and Tazerka (Fig. 2.5-4). All are conversions.

In general, most systems have performed well with minimal downtime once initial problems were overcome. Most systems were designed for production in the design environmental conditions. In many cases most of the above-water equipment were leased.

The technology for FPS and FPSO systems is well advanced and proven. A tanker-mounted system can be used in water depths from about 100 ft to 6,000 ft.

The latest and more advanced versions of the floating systems are the British Petroleum's "SWOPS" (Single Well Oil Production System) and Petro Jarl's "PTS" (Production and Testing System). These ships are currently under construction. The S.W.O.P.S. is dynamically positioned and is configured to lower a production riser through a moonpool and produce oil from a single well into its storage tanks (see Fig. 2.5-5). When the storage tanks are full, the same ship will disconnect and rack the riser and proceed to port for unloading. Then return to site, reconnect and resume production.

The PTS is designed for extended well testing as well as early production. It is a turret moored tanker with dynamic positioning. The risers are lowered through a moonpool in the turret near mid-ship similar to the BP-SWOPS. For unloading it will use shuttle tankers.

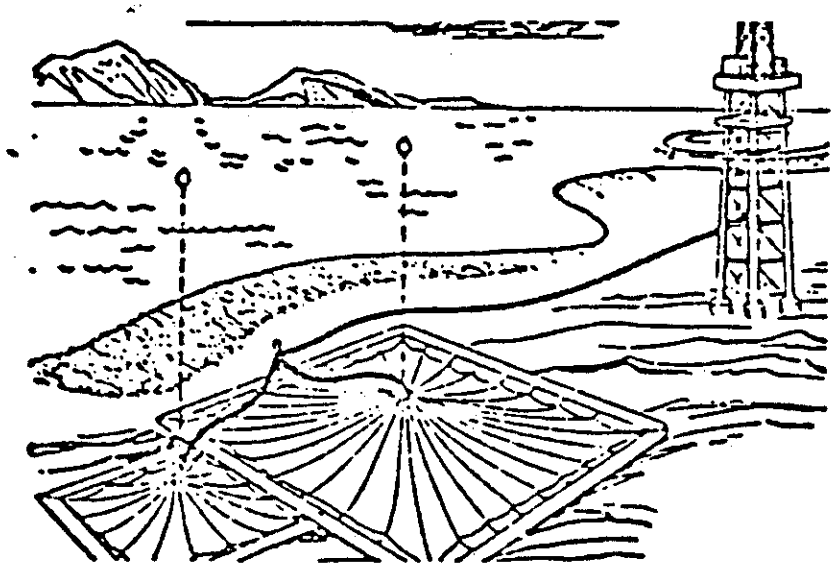

U.S. DEPARTMENT OF THE INTERIOR MINERALS MANAGEMENT SERVICE	SCALE: NONE	TITLE OF DRAWING:	
	DRAWN BY: E.H.S. DATE 8-16-85	THE PLASTIC CANOPY	
Brown & Root Development, Inc. HOUSTON, TEXAS	CHECKED BY: ANLS DATE 8-20-85		
	APPROVED: DATE 8-20-85		
	CUSTOMER APPROVAL	CONTRACT NUMBER XC-0030	DRAWING NUMBER FIGURE 2.3-2

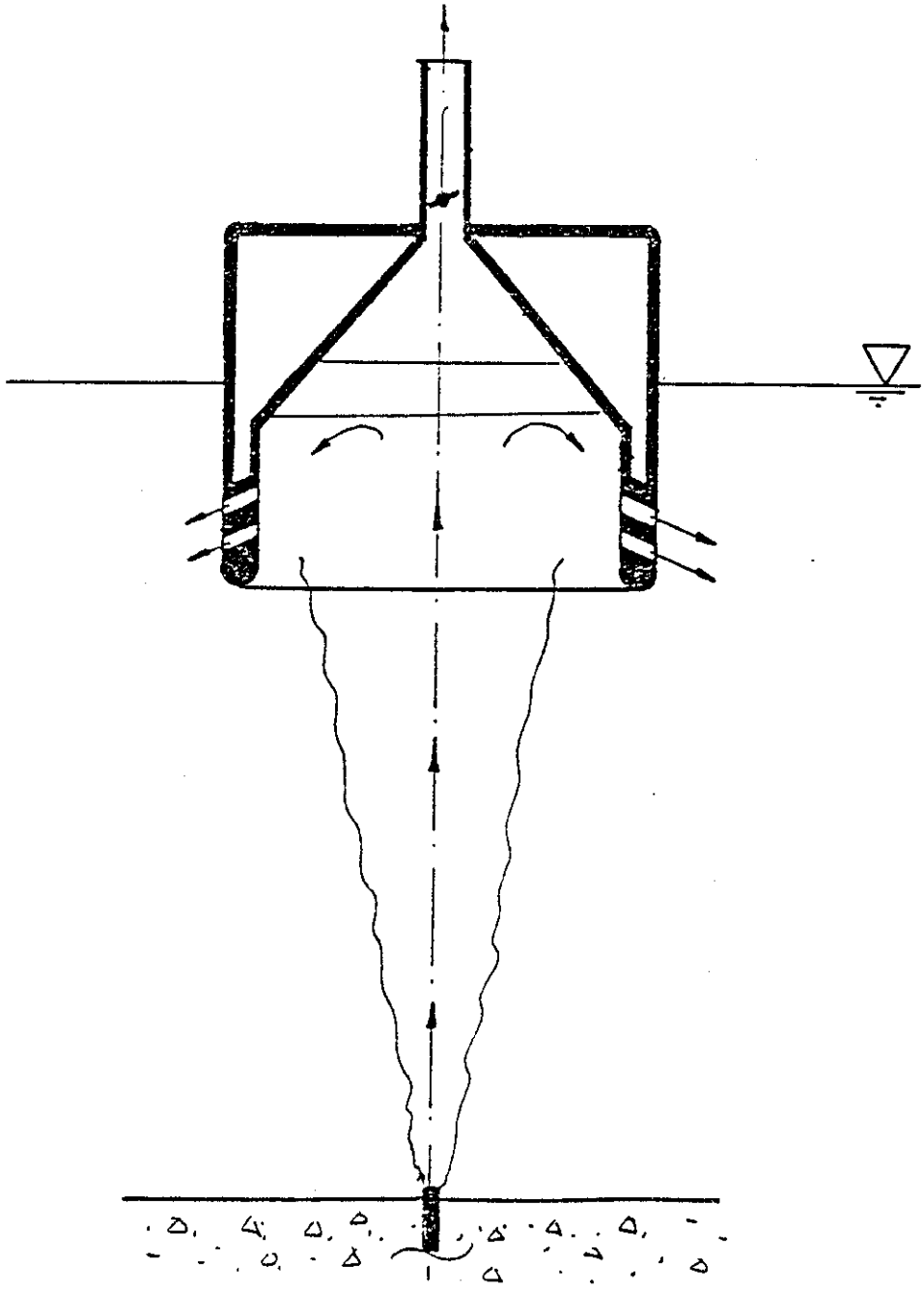

U.S. DEPARTMENT OF THE INTERIOR
MINERALS MANAGEMENT SERVICE

Brown & Root Development, Inc.
HOUSTON, TEXAS

SCALE: NONE	TITLE OF DRAWING: OIL RECOVERY BELL (FANNELØP)
DRAWN BY: A.FOX DATE: 8-1-85	
CHECKED BY: ANLS DATE: 8-20-85	
APPROVED: EEI DATE: 8-20-85	
CUSTOMER APPROVAL	CONTRACT NUMBER: XC-0030
	DRAWING NUMBER: FIGURE 2.3-3

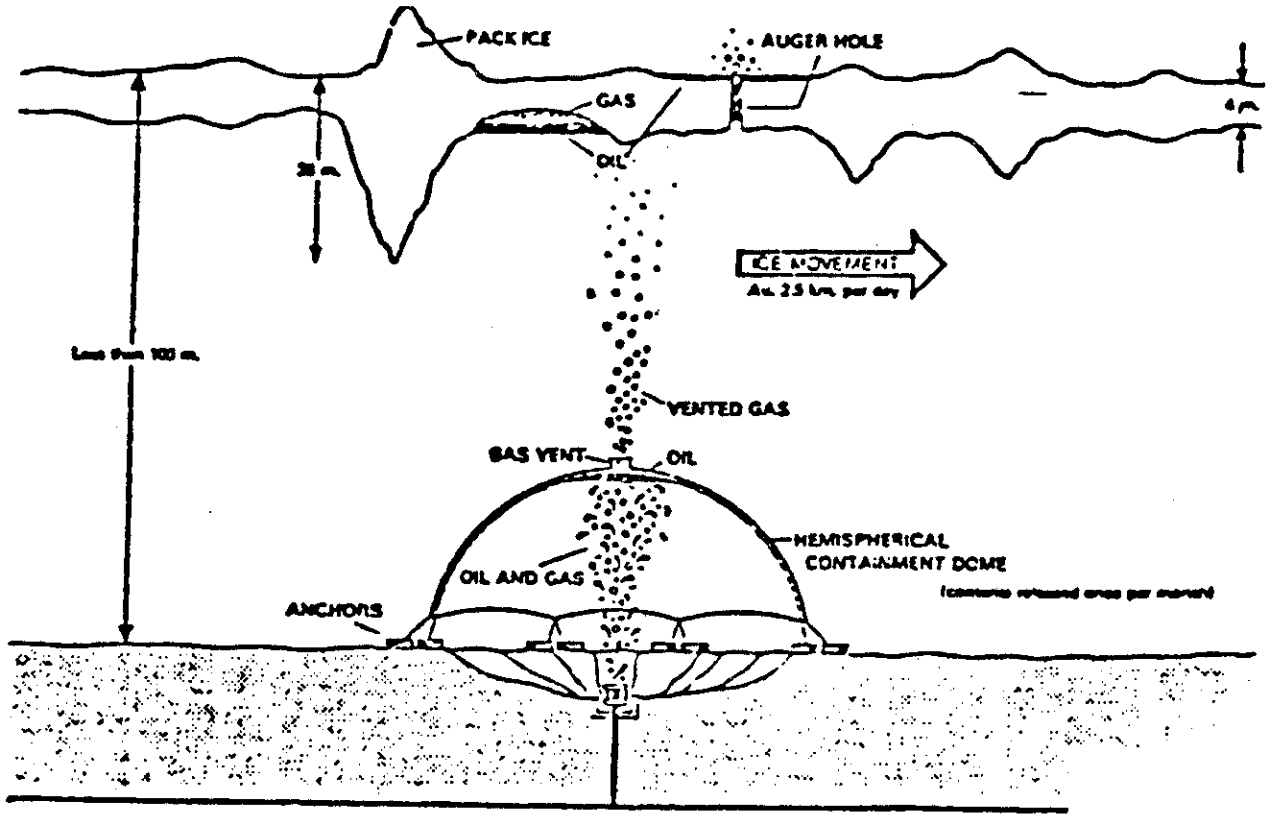

U.S. DEPARTMENT OF THE INTERIOR MINERALS MANAGEMENT SERVICE	SCALE: NONE		TITLE OF DRAWING:
	DRAWN BY: E.H.S.	DATE 8-16-85	TYPICAL METAL COLLECTING DOME
Brown & Root Development, Inc. HOUSTON, TEXAS	CHECKED BY: ANLS	DATE 8-20-85	(ROSE ET AL 1977)
	APPROVED: EEB	DATE 8-20-85	
	CUSTOMER APPROVAL		CONTRACT NUMBER XC-0030 / DRAWING NUMBER FIGURE 2.3-4

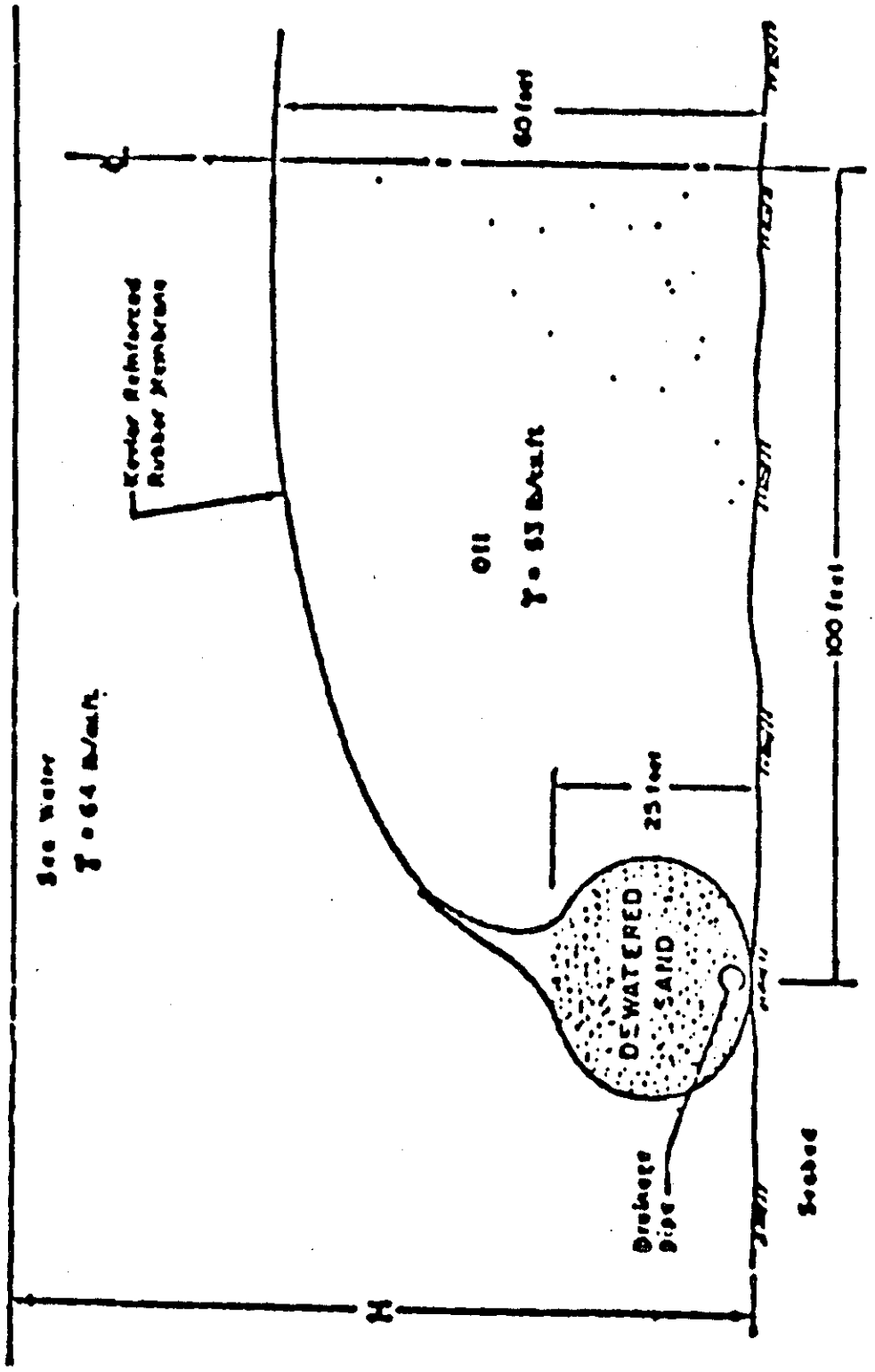

U.S. DEPARTMENT OF THE INTERIOR MINERALS MANAGEMENT SERVICE	SCALE: NONE	TITLE OF DRAWING: THE SANDOME
Brown & Root Development, Inc. HOUSTON, TEXAS	DRAWN BY: E.H.S. DATE 8-16-85	
	CHECKED BY: ANLS DATE 8-20-85	
	APPROVED: DATE 8-20-85	
	CUSTOMER APPROVAL	CONTRACT NUMBER XC-0030 / DRAWING NUMBER FIGURE 2.3-5

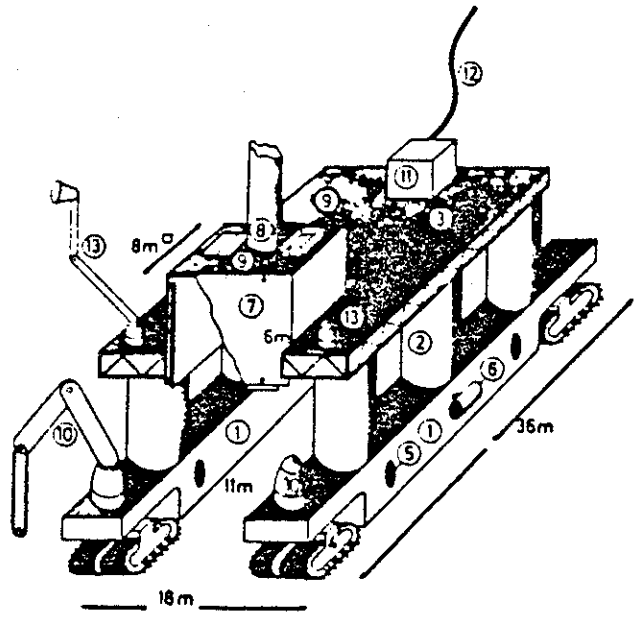

1 Pontoons
2 Columns
3 Deck
4 Caterpillar
5 Side thrusters
6 Thrusters
7 Bell
8 Riser hose
9 Closed, and one open hatch
10 Manipulator with chain saw
11 Control room
12 Tether cable
13 Antennae

U.S. DEPARTMENT OF THE INTERIOR MINERALS MANAGEMENT SERVICE	SCALE: NONE	TITLE OF DRAWING:
	DRAWN BY: A.FOX DATE 8-1-85	PLACEMENT RIG WITH BELL
Brown & Root Development, Inc. HOUSTON, TEXAS	CHECKED BY: ANLS DATE 8-20-85	IN HIGH POSITION
	APPROVED: EED DATE 8-20-85	(R.H. WESTERGAARD)
	CUSTOMER APPROVAL	CONTRACT NUMBER XC-0030 / DRAWING NUMBER FIGURE 2.3-6

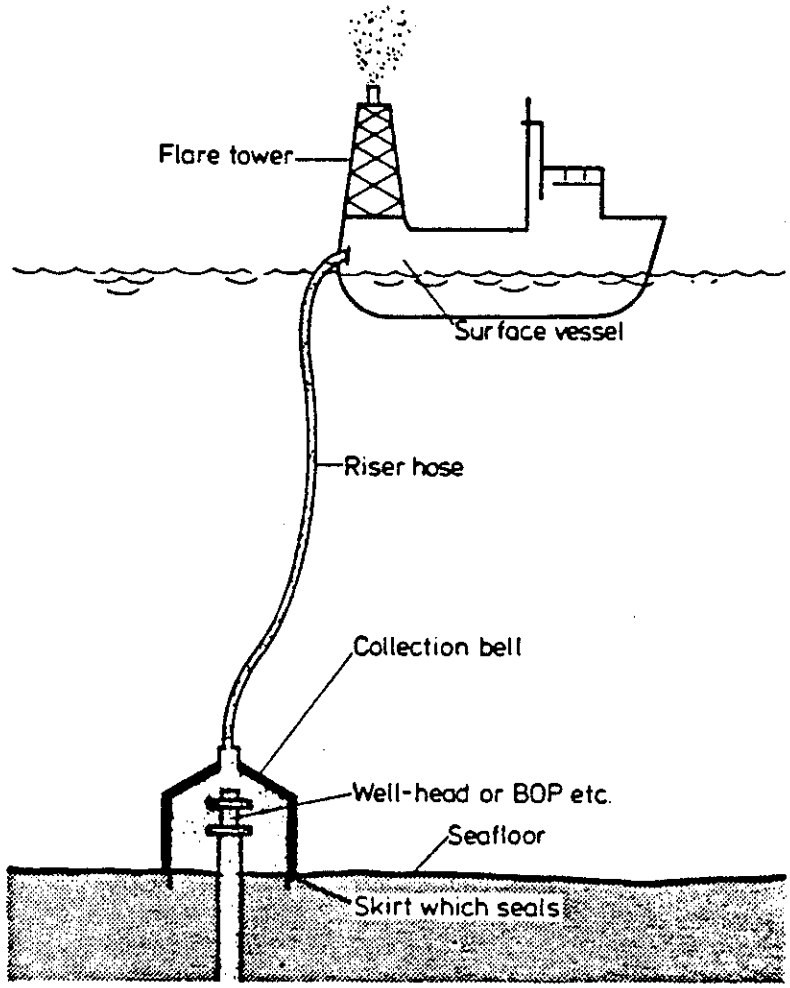

U.S. DEPARTMENT OF THE INTERIOR
MINERALS MANAGEMENT SERVICE

Brown & Root Development, Inc.
HOUSTON, TEXAS

SCALE: NONE	TITLE OF DRAWING:
DRAWN BY: A.FOX DATE 8-1-85	PRINCIPLE OF UNDERWATER
CHECKED BY: ANLS DATE 8-20-85	COLLECTION
APPROVED: EEO DATE 8-20-85	(R.H. WESTERGAARD)
CUSTOMER APPROVAL	CONTRACT NUMBER XC-0030 / DRAWING NUMBER FIGURE 2.3-6A

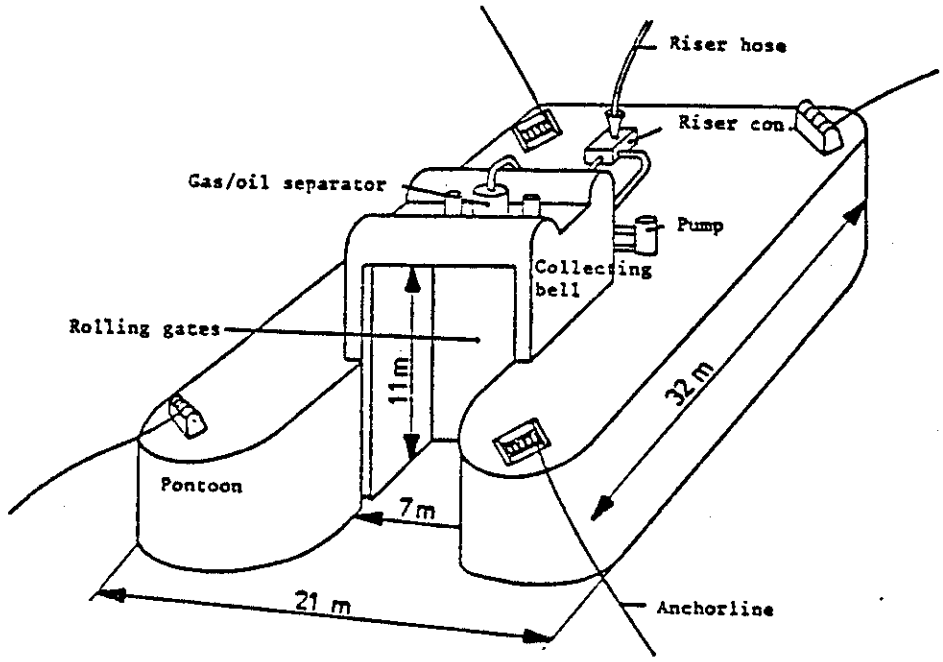

U.S. DEPARTMENT OF THE INTERIOR
MINERALS MANAGEMENT SERVICE

Brown & Root Development, Inc.
HOUSTON, TEXAS

SCALE: NONE	TITLE OF DRAWING: THE COLLECTING BELL (R.H. WESTERGAARD)
DRAWN BY: A. FOX DATE 8-1-85	
CHECKED BY: ANLS DATE 8-20-85	
APPROVED: DATE 8-20-85	
CUSTOMER APPROVAL	CONTRACT NUMBER XC-0030 / DRAWING NUMBER FIGURE 2.3-7

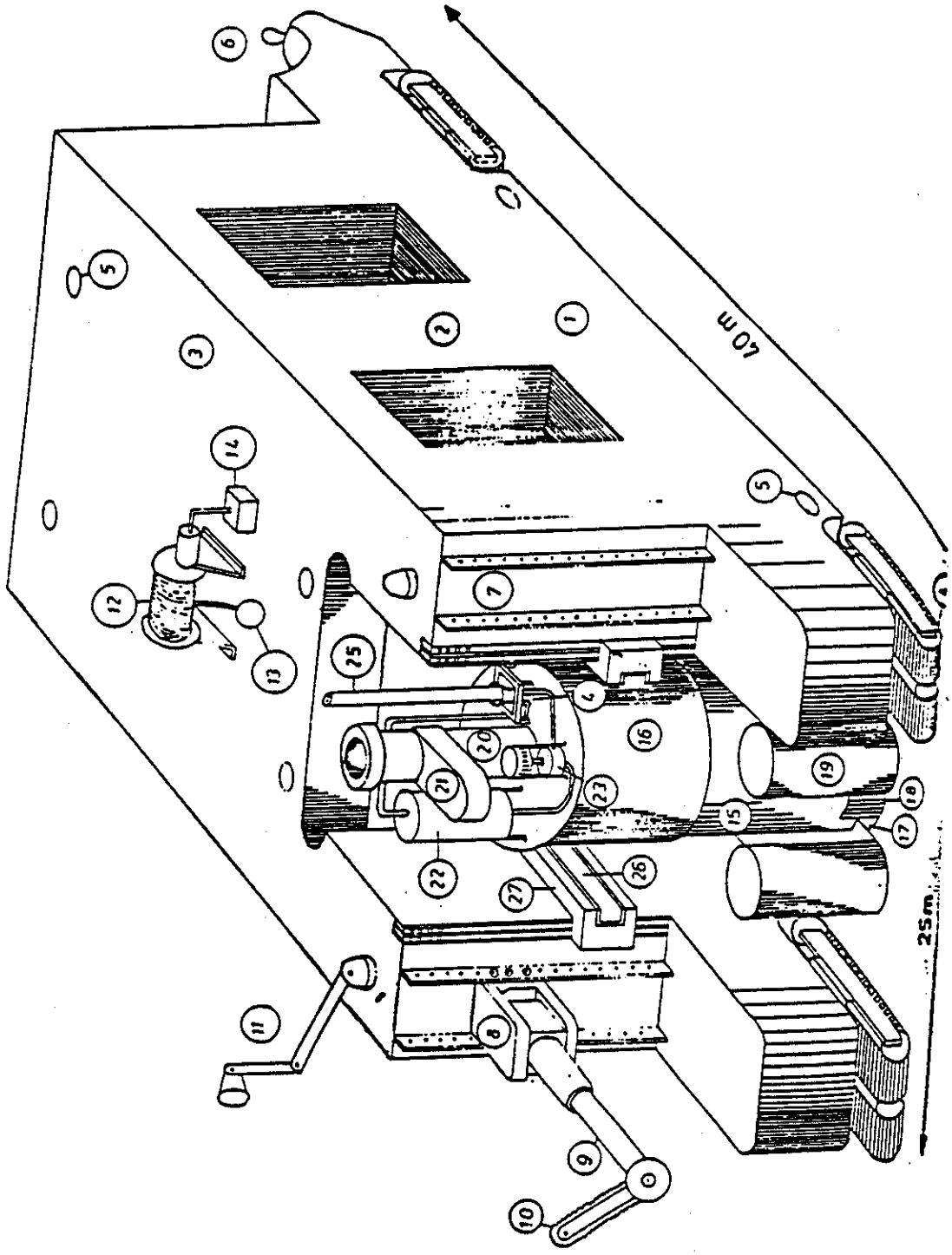

U.S. DEPARTMENT OF THE INTERIOR
MINERALS MANAGEMENT SERVICE

Brown & Root Development, Inc.
HOUSTON, TEXAS

SCALE: NONE	TITLE OF DRAWING:
DRAWN BY: E.H.S. DATE 8-16-85	THE UNIVERSAL BELL
CHECKED BY: ANLS DATE 8-20-85	SI'S MOST SOPHISTICATED CONCEPT
APPROVED: E.E.S DATE 8-20-85	
CUSTOMER APPROVAL	CONTRACT NUMBER XC-0030 / DRAWING NUMBER FIGURE 2.3-8

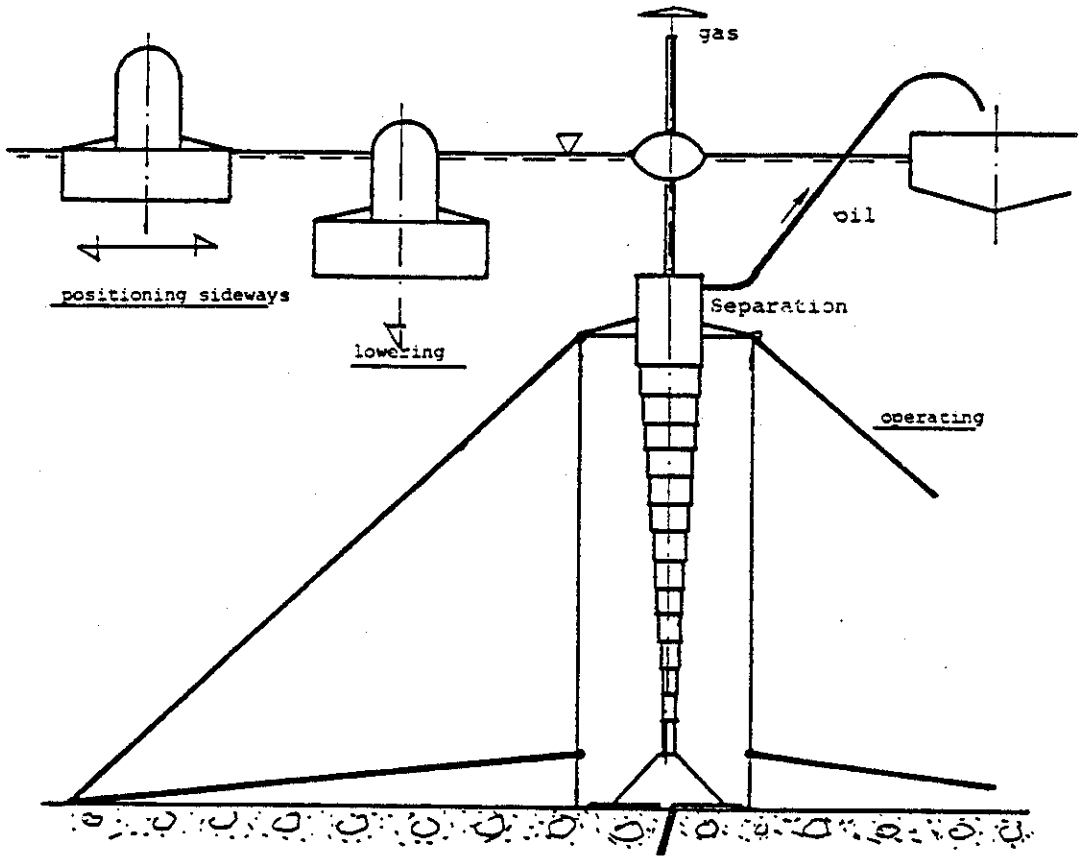

U.S. DEPARTMENT OF THE INTERIOR MINERALS MANAGEMENT SERVICE	SCALE: NONE	TITLE OF DRAWING:
	DRAWN BY: A. FOX DATE 7-31-85	BLOW OUT ARRESTOR
Brown & Root Development, Inc. HOUSTON, TEXAS	CHECKED BY: ANLS DATE 8-20-85	(UNICONSULT)
	APPROVED: EED DATE 8-20-85	
	CUSTOMER APPROVAL	CONTRACT NUMBER XC-0030 / DRAWING NUMBER FIGURE 2.3-9

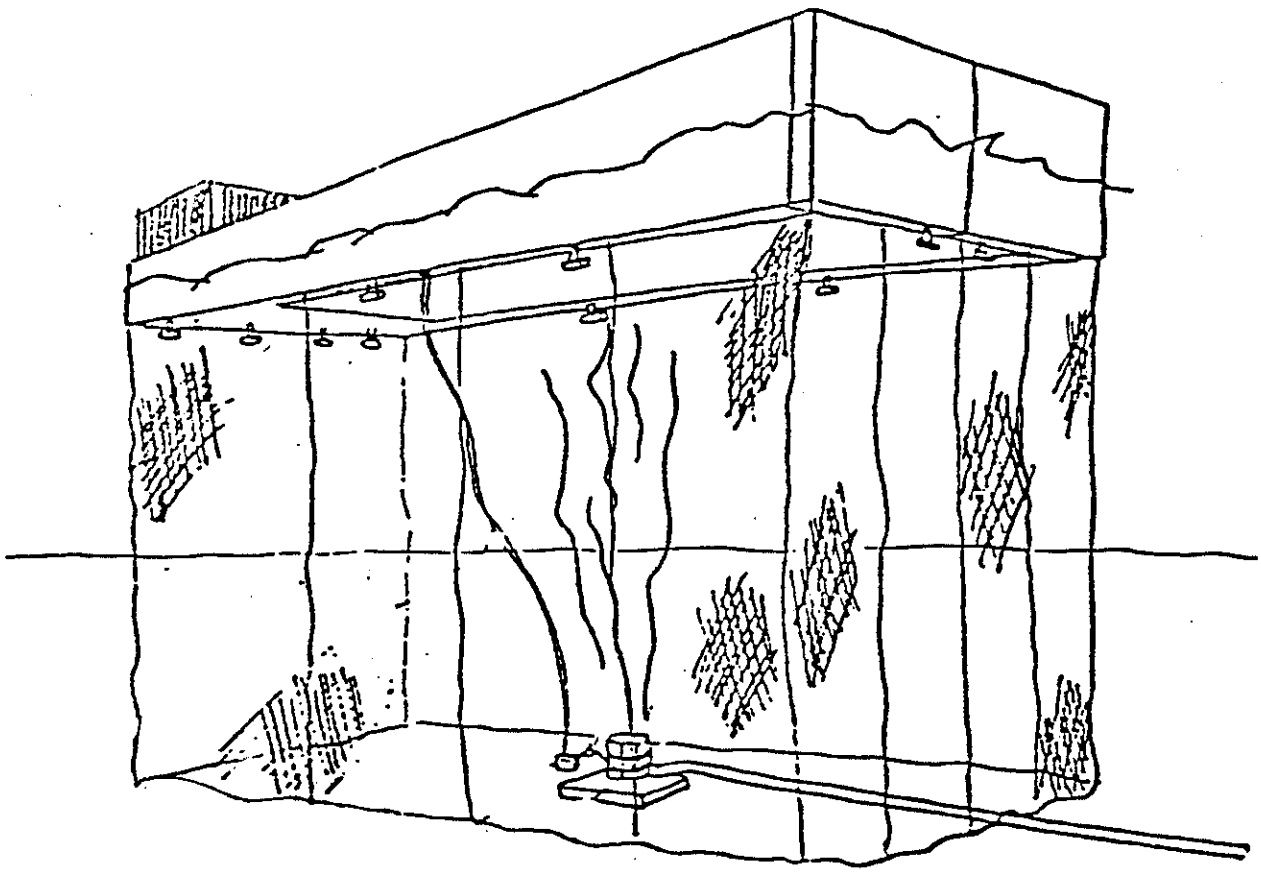

U.S. DEPARTMENT OF THE INTERIOR
MINERALS MANAGEMENT SERVICE

Brown & Root Development, Inc.
HOUSTON, TEXAS

SCALE: NONE	
DRAWN BY: A.FOX	DATE 8-1-85
CHECKED BY: ANLS	DATE 8-20-85
APPROVED: EEB	DATE 8-20-85
CUSTOMER APPROVAL	

TITLE OF DRAWING:
SELFPROPELLED VESSEL,
UNDERWATER VIEW
(G. BASTIANSEN)

CONTRACT NUMBER	DRAWING NUMBER
XC-0030	FIGURE 2.3-10

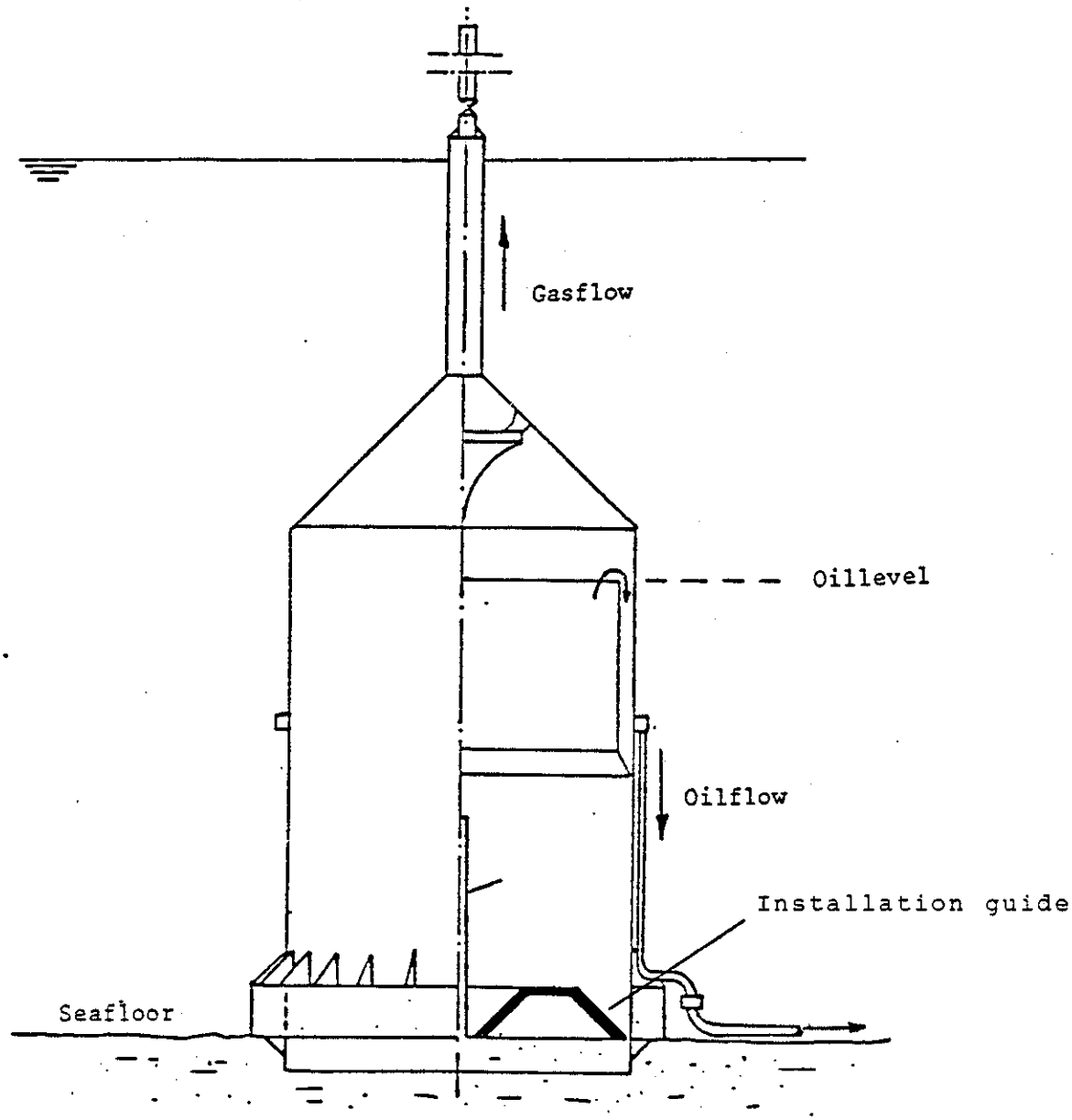

U.S. DEPARTMENT OF THE INTERIOR
MINERALS MANAGEMENT SERVICE

Brown & Root Development, Inc.
HOUSTON, TEXAS

SCALE: NONE	TITLE OF DRAWING:
DRAWN BY: A. FOX DATE 7-31-85	A VERSION OF BMV'S BLOW OUT
CHECKED BY: ANLS DATE 8-20-85	BOTTLE
APPROVED: EEP DATE 8-20-85	(BERGENS MEK VERK)
CUSTOMER APPROVAL	CONTRACT NUMBER XC-0030 / DRAWING NUMBER FIGURE 2.3-11

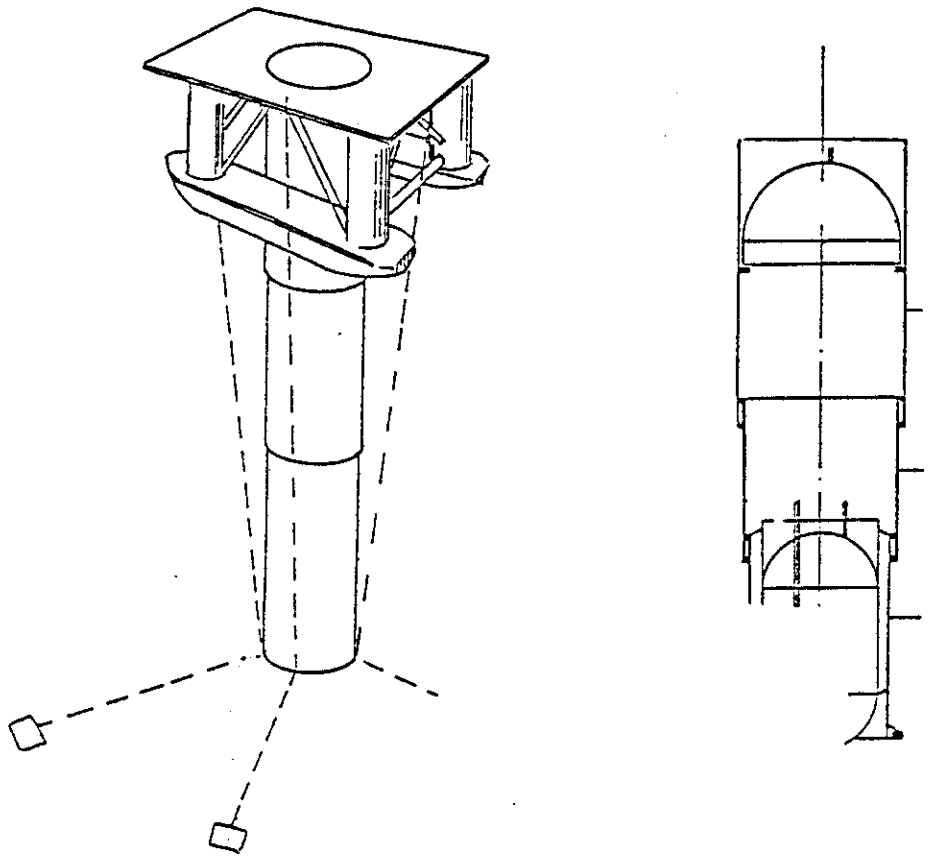

U.S. DEPARTMENT OF THE INTERIOR
MINERALS MANAGEMENT SERVICE

Brown & Root Development, Inc.
HOUSTON, TEXAS

SCALE: NONE	TITLE OF DRAWING: TELESCOPIC OIL COLLECTOR (BRATTLAND & SØRHUS)
DRAWN BY: A. FOX DATE 7-31-85	
CHECKED BY: ANLS DATE 8-20-85	
APPROVED: EEB DATE 8-20-85	
CUSTOMER APPROVAL	CONTRACT NUMBER XC-0030 / DRAWING NUMBER FIGURE 2.3-12

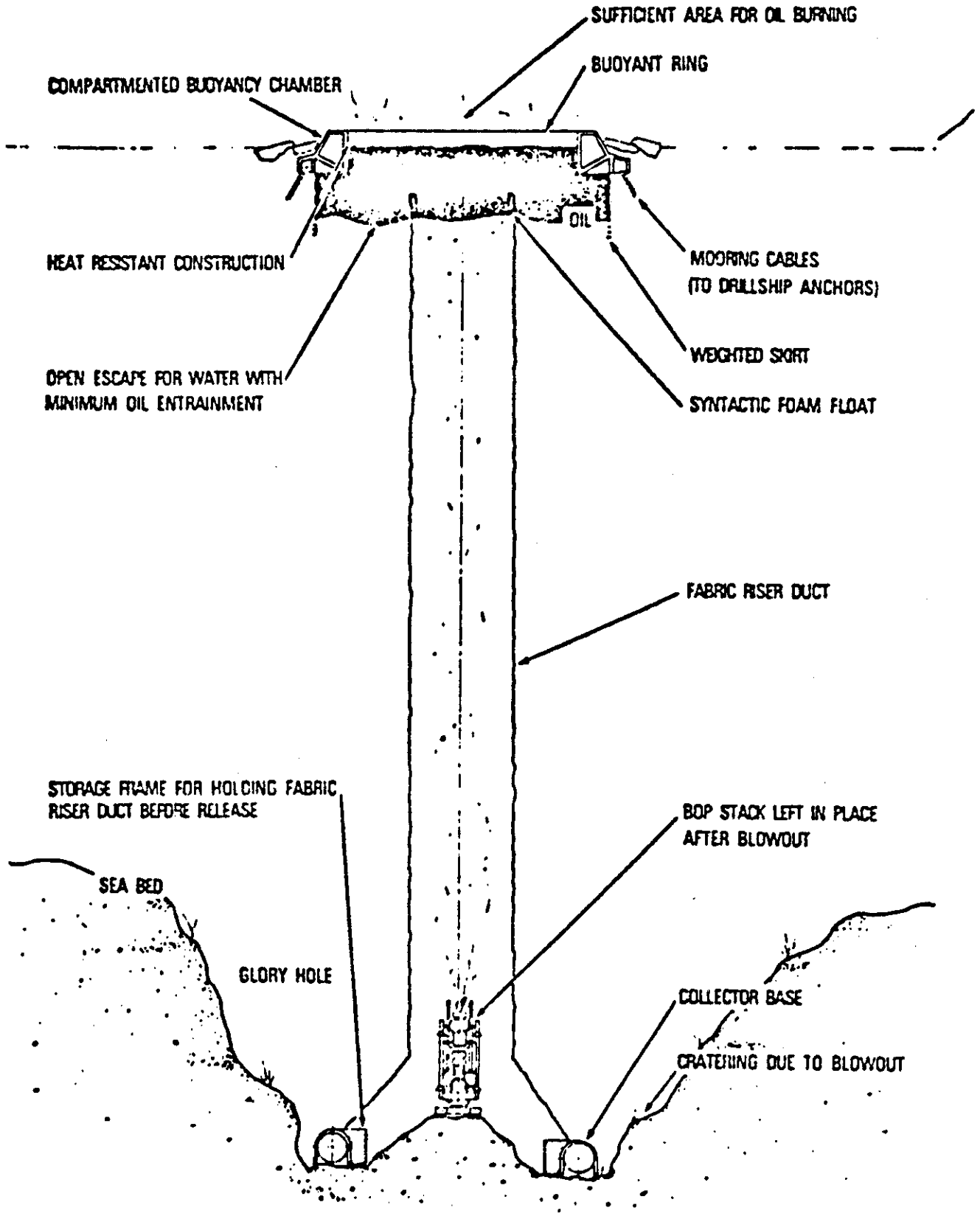

U.S. DEPARTMENT OF THE INTERIOR
MINERALS MANAGEMENT SERVICE

Brown & Root Development, Inc.
HOUSTON, TEXAS

SCALE: NONE	TITLE OF DRAWING:
DRAWN BY: E.H.S. DATE 8-16-85	THE UNDERWATER COLLECTOR
CHECKED BY: ANLS DATE 8-20-85	BURNER SYSTEM (LOCKHEED PET. LTD)
APPROVED: DATE 8-20-85	
CUSTOMER APPROVAL	CONTRACT NUMBER XC-0030 / DRAWING NUMBER FIGURE 2.3-13

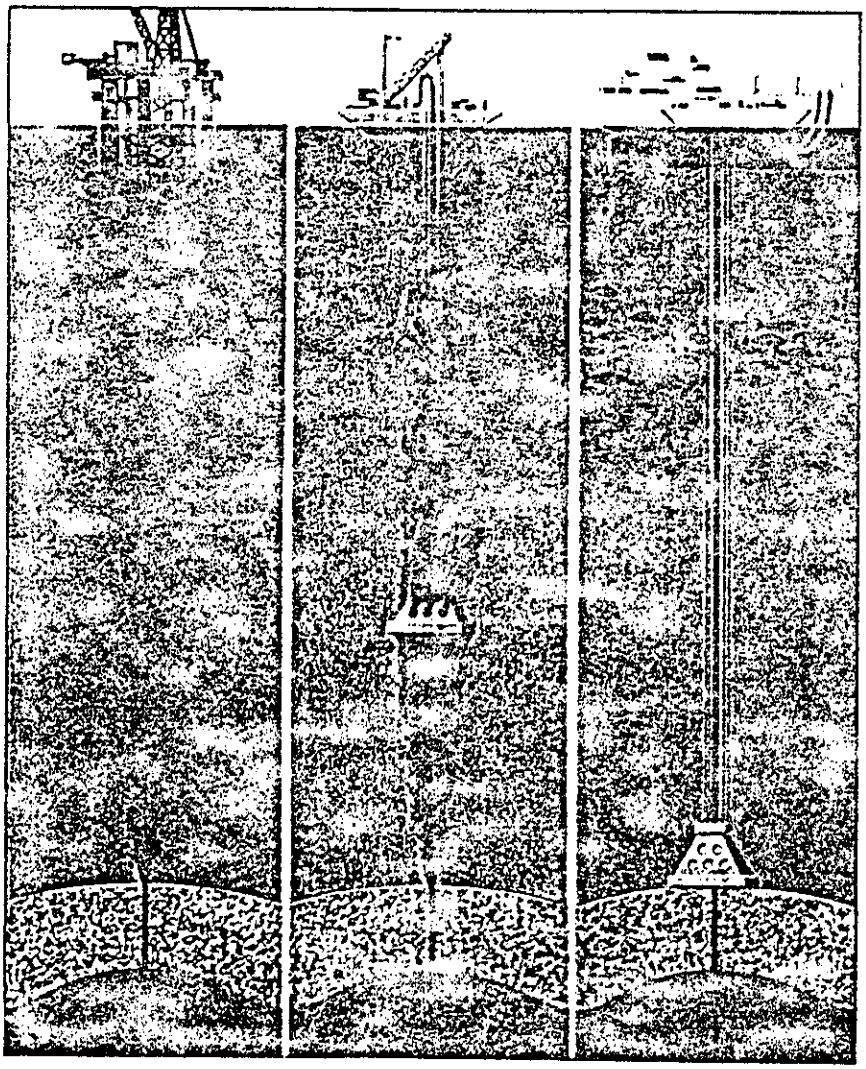

U.S. DEPARTMENT OF THE INTERIOR
MINERALS MANAGEMENT SERVICE

Brown & Root Development, Inc.
HOUSTON, TEXAS

SCALE: NONE	TITLE OF DRAWING: BELL SHAPED COLLECTING DEVICE (J. P. DUPONT)
DRAWN BY: A. FOX DATE: 7-31-85	
CHECKED BY: ANLS DATE: 8-20-85	
APPROVED: [illegible] DATE: 8-22-85	
CUSTOMER APPROVAL	CONTRACT NUMBER: XC-0030
	DRAWING NUMBER: FIGURE 2.3-14

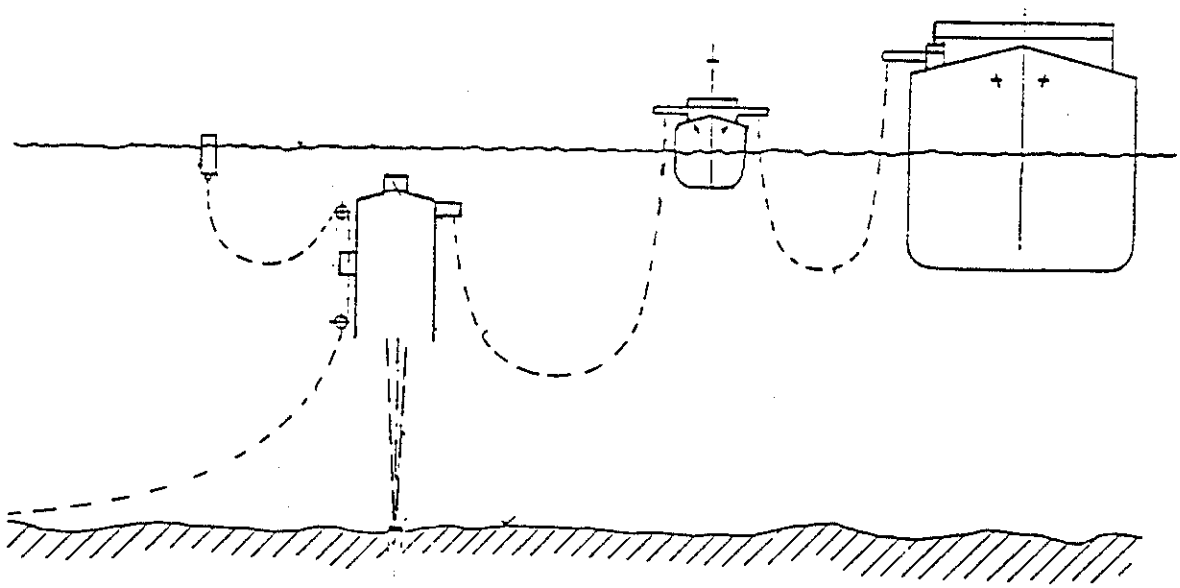

U.S. DEPARTMENT OF THE INTERIOR MINERALS MANAGEMENT SERVICE	SCALE: NONE		TITLE OF DRAWING: THE SPILL COLLECTING BELL (K.J. HJELSET)
Brown & Root Development, Inc. HOUSTON, TEXAS	DRAWN BY: A. FOX	DATE: 7-31-85	
	CHECKED BY: ANLS	DATE: 8-20-85	
	APPROVED: EE	DATE: 8-20-85	
	CUSTOMER APPROVAL		CONTRACT NUMBER: XC-0030 / DRAWING NUMBER: FIGURE 2.3-15

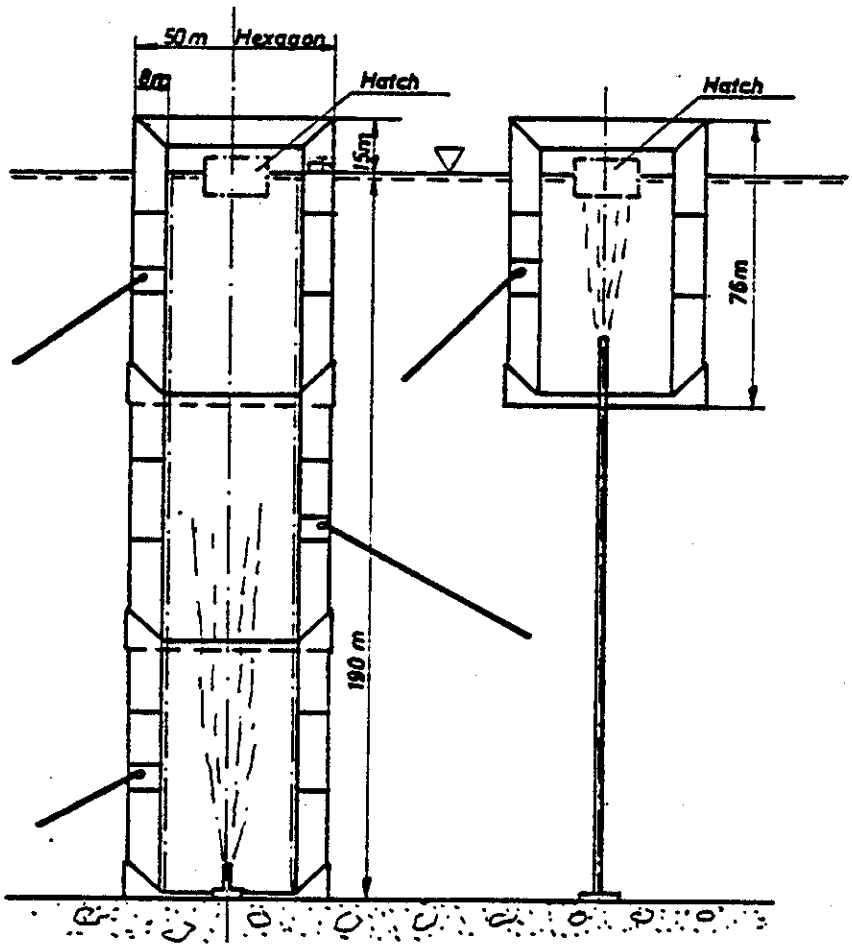

U.S. DEPARTMENT OF THE INTERIOR MINERALS MANAGEMENT SERVICE	SCALE: NONE		TITLE OF DRAWING: A. HOLSTAD'S TUBE TANK
Brown & Root Development, Inc. HOUSTON, TEXAS	DRAWN BY: A. FOX	DATE 7-31-85	
	CHECKED BY: ANLS	DATE 8-20-85	
	APPROVED: [illegible]	DATE 8-20-85	
	CUSTOMER APPROVAL		CONTRACT NUMBER XC-0030 / DRAWING NUMBER FIGURE 2.3-16

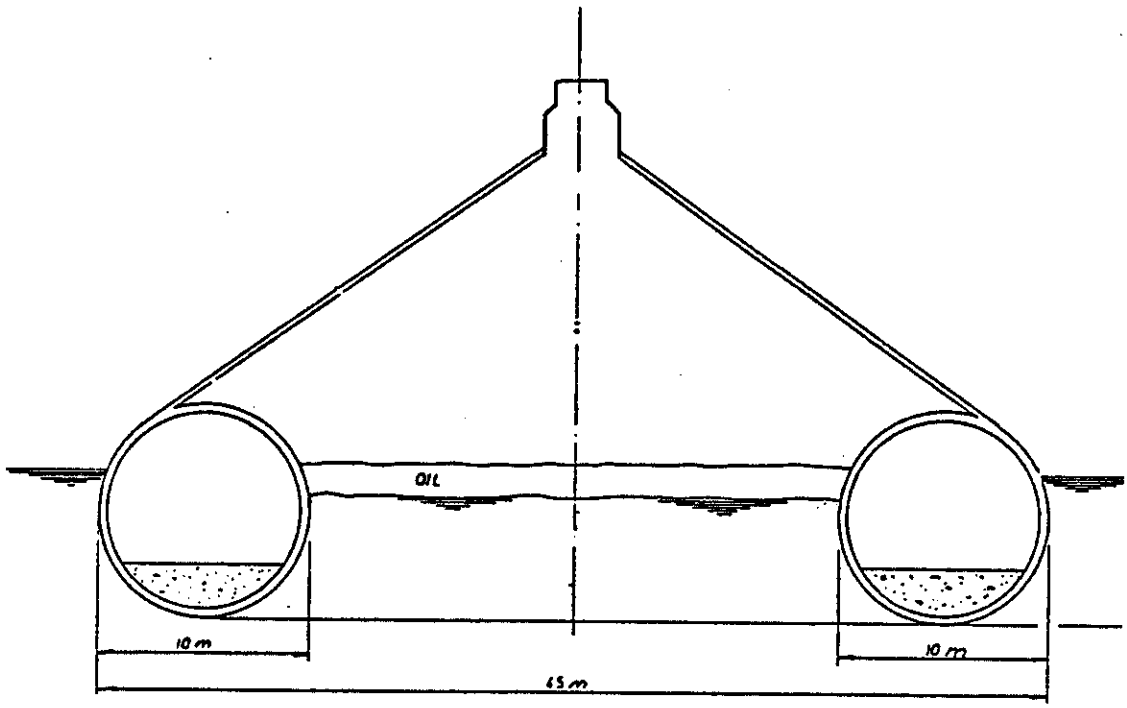

U.S. DEPARTMENT OF THE INTERIOR
MINERALS MANAGEMENT SERVICE

Brown & Root Development, Inc.
HOUSTON, TEXAS

SCALE: NONE	TITLE OF DRAWING: THE FLOATING FLARE-STACK (NORWEGIAN CONTRACTORS)
DRAWN BY: A. FOX — DATE: 7-31-85	
CHECKED BY: ANLS — DATE: 8-20-85	
APPROVED: EEO — DATE: 8-20-85	
CUSTOMER APPROVAL	CONTRACT NUMBER: XC-0030 — DRAWING NUMBER: FIGURE 2.3-17

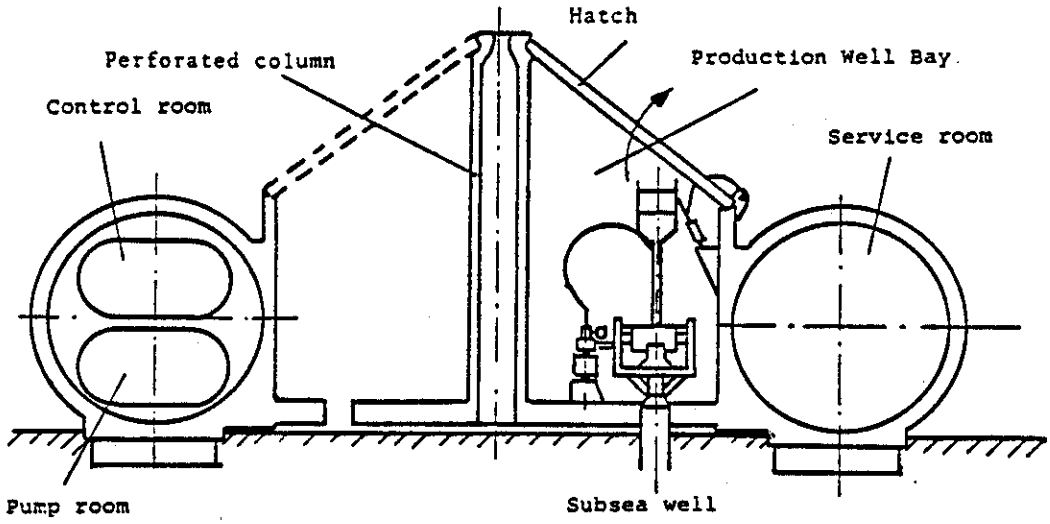

U.S. DEPARTMENT OF THE INTERIOR
MINERALS MANAGEMENT SERVICE

Brown & Root Development, Inc.
HOUSTON, TEXAS

SCALE: NONE	TITLE OF DRAWING: DOUGHNUT ARRANGEMENT (NORWEGIAN CONTRACTORS)
DRAWN BY: A. FOX DATE 7-31-85	
CHECKED BY: ANS DATE 8-20-85	
APPROVED: E.E. DATE 8-20-85	
CUSTOMER APPROVAL	CONTRACT NUMBER XC-0030 / DRAWING NUMBER FIGURE 2.3-18

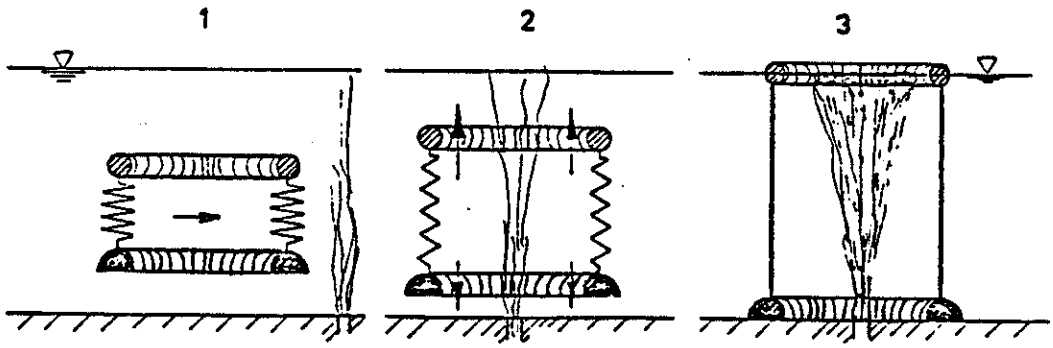

U.S. DEPARTMENT OF THE INTERIOR MINERALS MANAGEMENT SERVICE	SCALE: NONE	TITLE OF DRAWING INSTALLATION OF THE DUCT (NSFI)
Brown & Root Development, Inc. HOUSTON, TEXAS	DRAWN BY: A.FOX DATE 7-31-85 CHECKED BY: ANLS DATE 8-20-85 APPROVED: DATE 8-20-85 CUSTOMER APPROVAL	CONTRACT NUMBER XC-0030 DRAWING NUMBER FIGURE 2.3-19

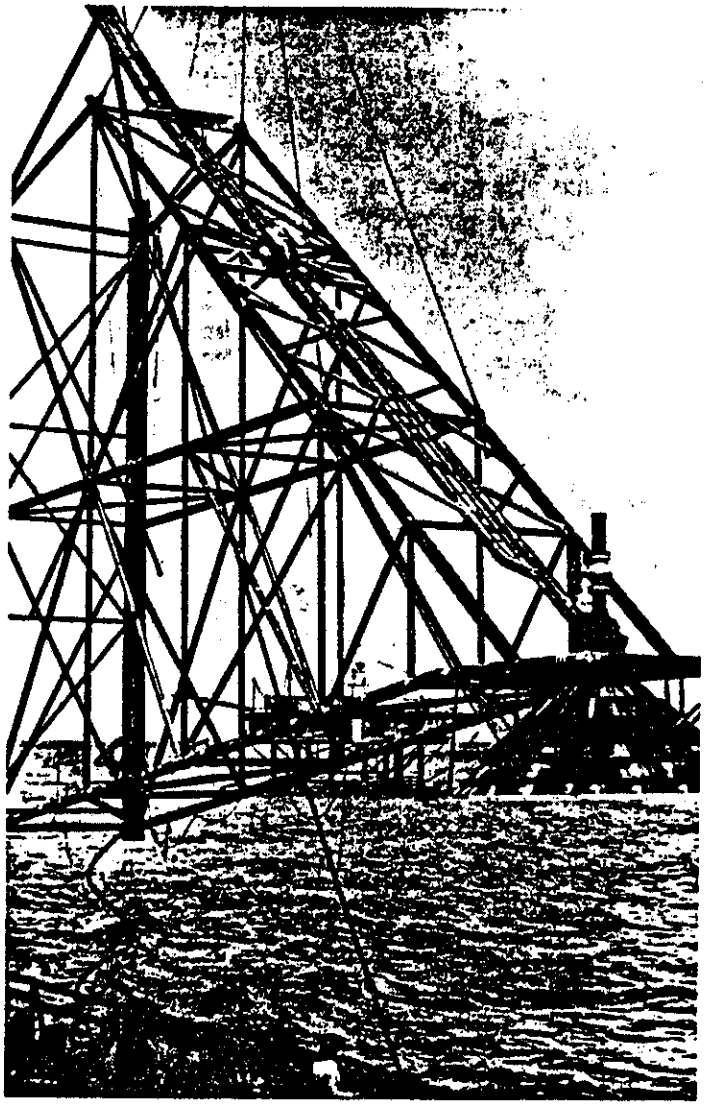

U.S. DEPARTMENT OF THE INTERIOR
MINERALS MANAGEMENT SERVICE

Brown & Root Development, Inc.
HOUSTON, TEXAS

SCALE: NONE	TITLE OF DRAWING: STEEL SOMBRERO OPEN BOTTOM COLLECTOR USED ON THE IXTOC 1 BLOWOUT CAMPECHE BAY, 1979
DRAWN BY: E.H.S. DATE: 8-16-85	
CHECKED BY: ANLS DATE: 8-20-85	
APPROVED: DATE: 8-20-85	
CUSTOMER APPROVAL	CONTRACT NUMBER: XC-0030
	DRAWING NUMBER: FIGURE 2.3-20

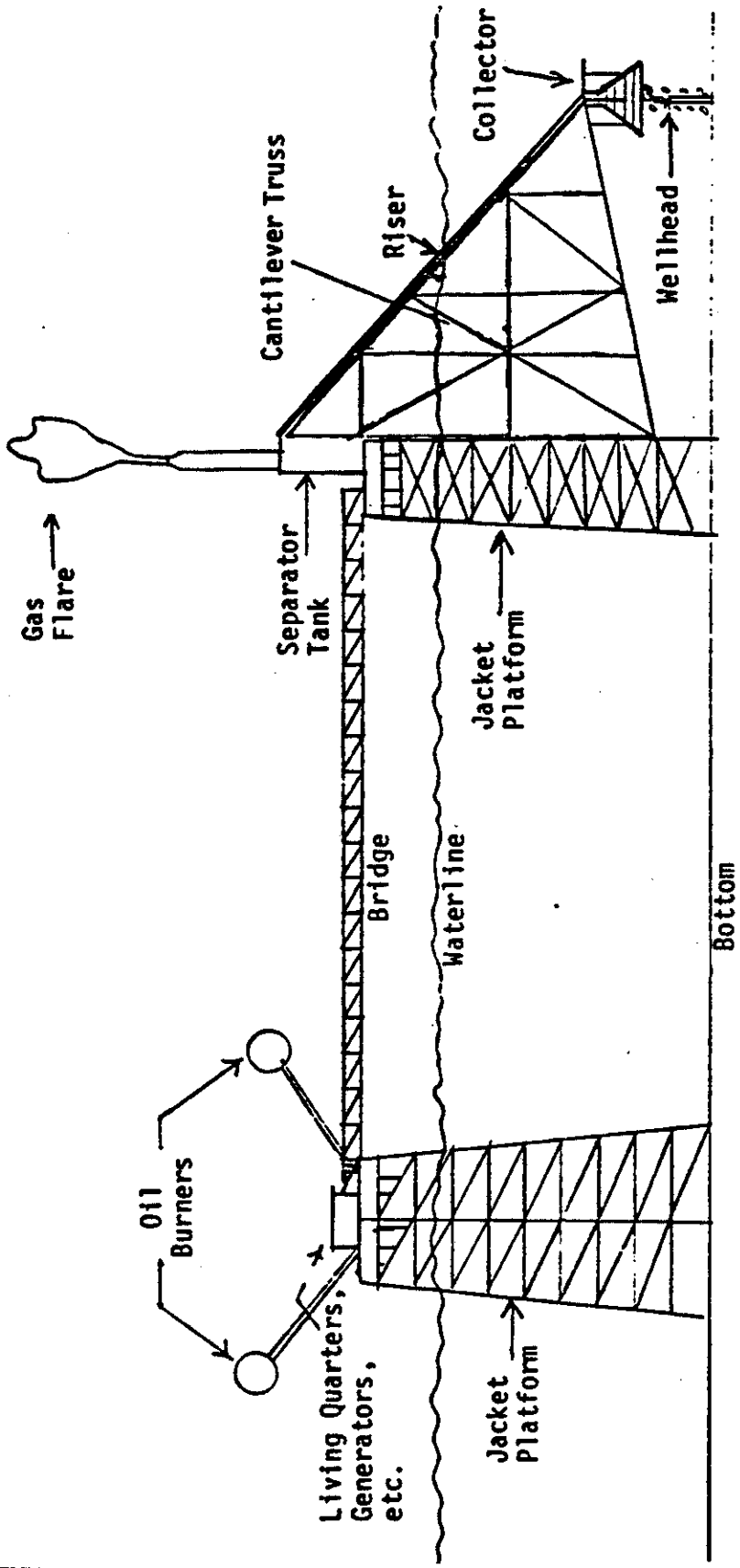

U.S. DEPARTMENT OF THE INTERIOR
MINERALS MANAGEMENT SERVICE

Brown & Root Development, Inc.
HOUSTON, TEXAS

SCALE: NONE	TITLE OF DRAWING: DIAGRAM OF THE "STEEL SOMBRERO" SYSTEM
DRAWN BY: E.H.S. DATE 8-16-85	
CHECKED BY: ANLS DATE 8-20-85	
APPROVED: DATE 8-20-85	
CUSTOMER APPROVAL	CONTRACT NUMBER XC-0030
	DRAWING NUMBER FIGURE 2.3-21

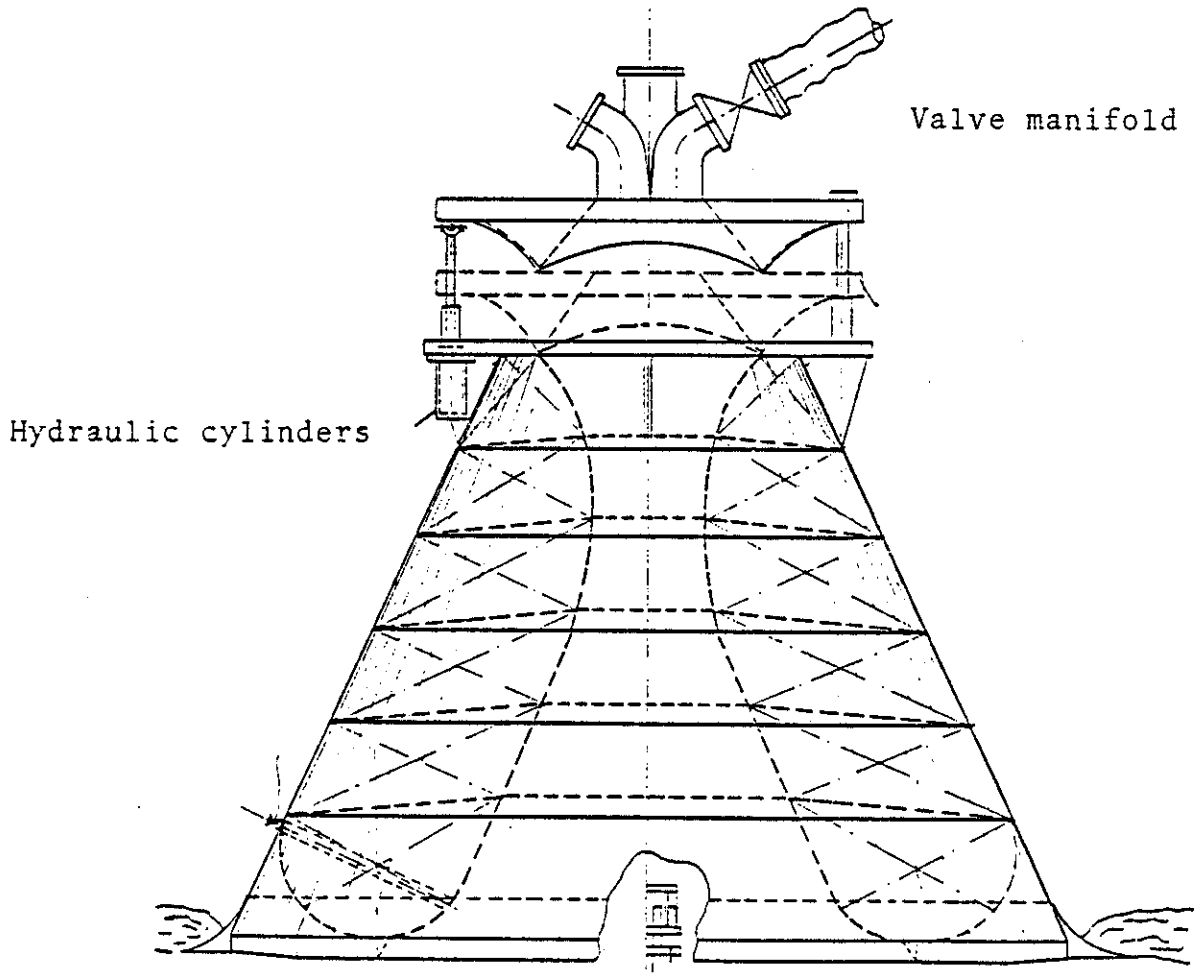

U.S. DEPARTMENT OF THE INTERIOR
MINERALS MANAGEMENT SERVICE

Brown & Root Development, Inc.
HOUSTON, TEXAS

SCALE: NONE	TITLE OF DRAWING: OIL WELL ARRESTOR (WEST ENGR & RES.)
DRAWN BY: A.FOX DATE: 7-31-85	
CHECKED BY: ANLS DATE: 8-20-85	
APPROVED: EEP DATE: 8-20-85	
CUSTOMER APPROVAL	CONTRACT NUMBER: XC-0030
	DRAWING NUMBER: FIGURE 2.3-22

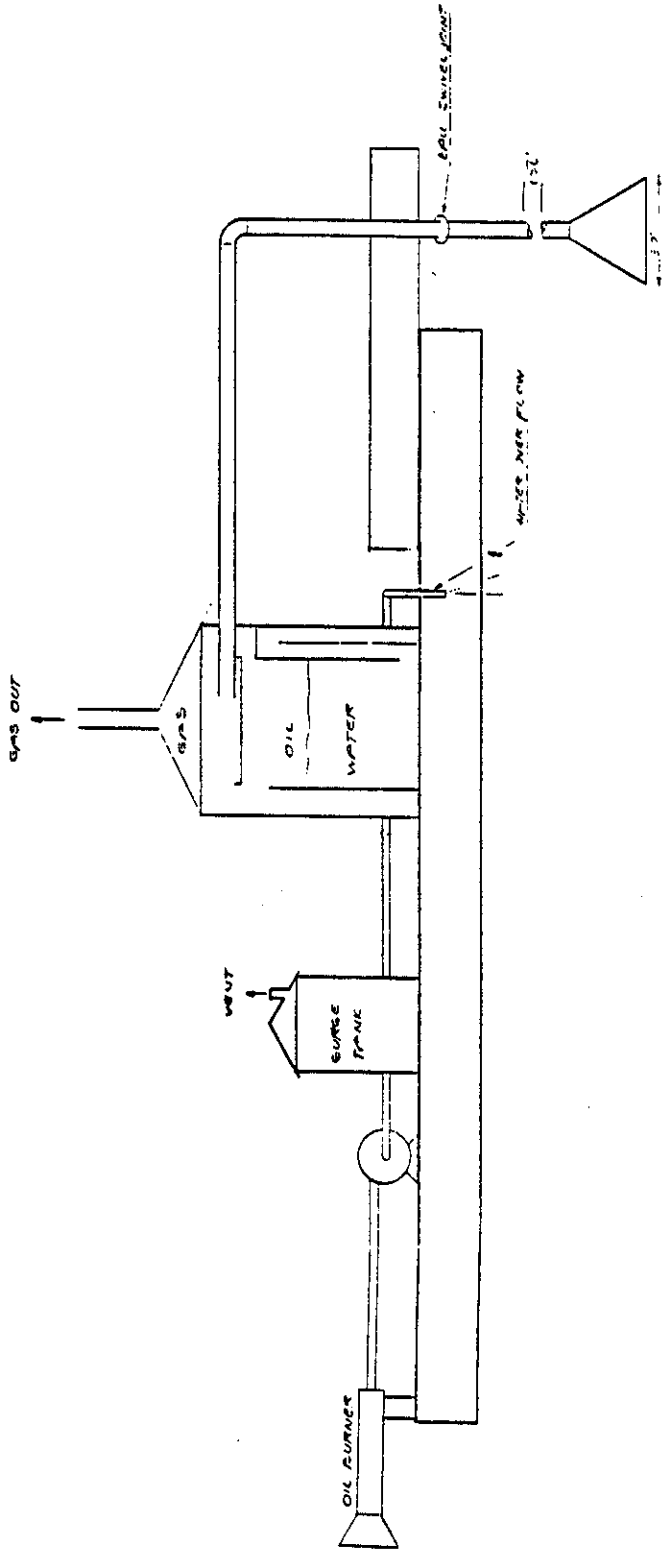

U.S. DEPARTMENT OF THE INTERIOR
MINERALS MANAGEMENT SERVICE

Brown & Root Development, Inc.
HOUSTON, TEXAS

SCALE: NONE	TITLE OF DRAWING:
DRAWN BY: E.H.S. DATE 8-16-85	PEMEX'S BARGE SUPPORTED
CHECKED BY: ANLS DATE 8-20-85	SOMBRERO
APPROVED: EEP DATE 8-20-85	
CUSTOMER APPROVAL	CONTRACT NUMBER XC-0030 / DRAWING NUMBER FIGURE 2.3-23

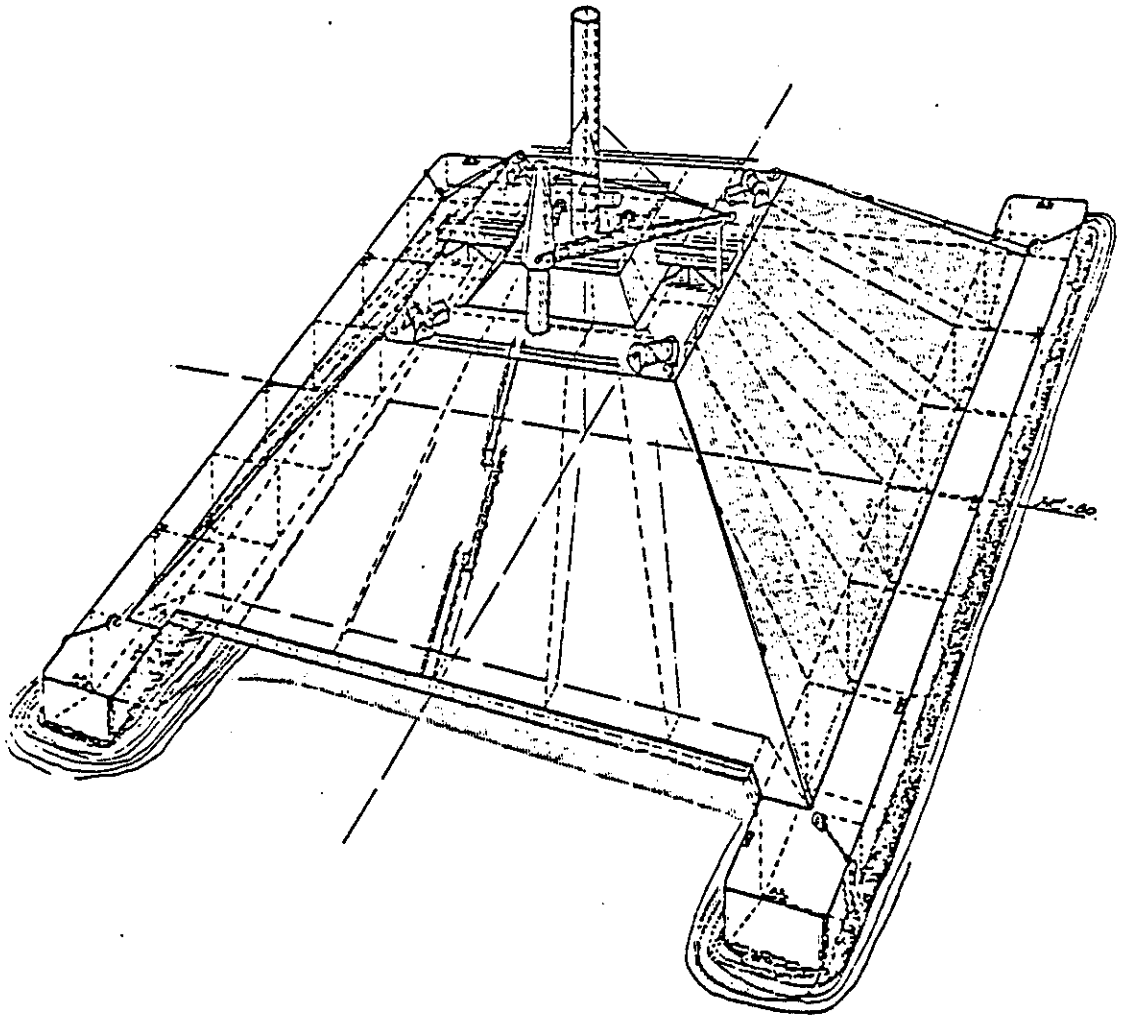

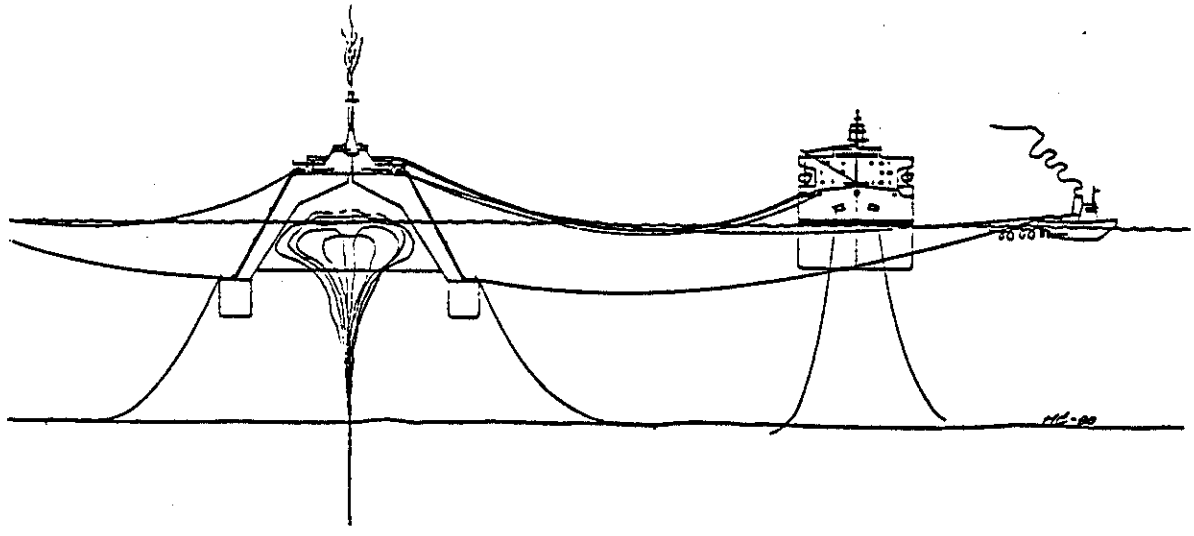

U.S. DEPARTMENT OF THE INTERIOR
MINERALS MANAGEMENT SERVICE

Brown & Root Development, Inc.
HOUSTON, TEXAS

SCALE: NONE	TITLE OF DRAWING: OIL COLLECTING VESSEL (BROSTRØM SHIPPING)
DRAWN BY: A.FOX DATE 7-31-85	
CHECKED BY: ANLS DATE 8-20-85	
APPROVED: DATE 8-20-85	
CUSTOMER APPROVAL	CONTRACT NUMBER XC-0030 / DRAWING NUMBER FIGURE 2.3-24

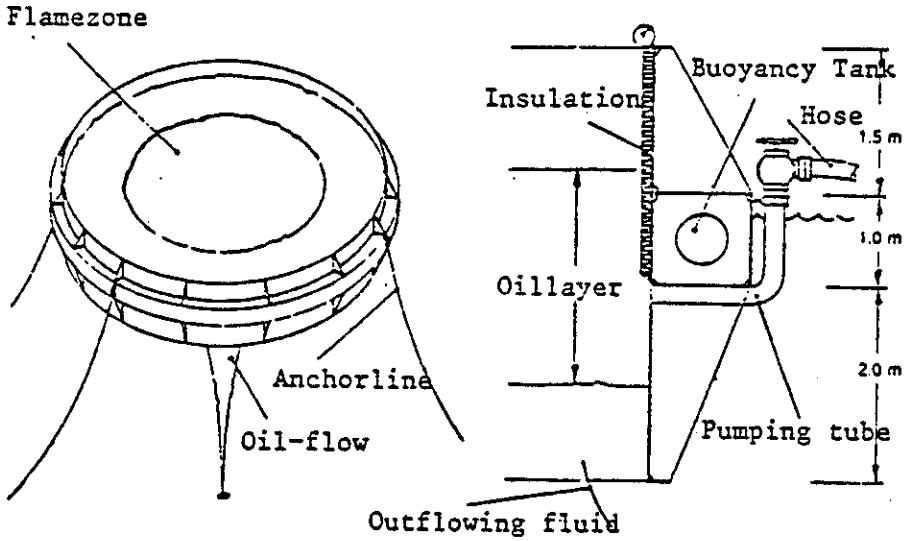

U.S. DEPARTMENT OF THE INTERIOR MINERALS MANAGEMENT SERVICE	SCALE: NONE	TITLE OF DRAWING: THE FLOATING TANK (COLLAR) (H.J. MAELAND)
Brown & Root Development, Inc. HOUSTON, TEXAS	DRAWN BY: A. FOX DATE 7-31-85	
	CHECKED BY: ANLS DATE 8-20-85	
	APPROVED: EEP DATE 8-20-85	
	CUSTOMER APPROVAL	CONTRACT NUMBER XC-0030 / DRAWING NUMBER FIGURE 2.3-25

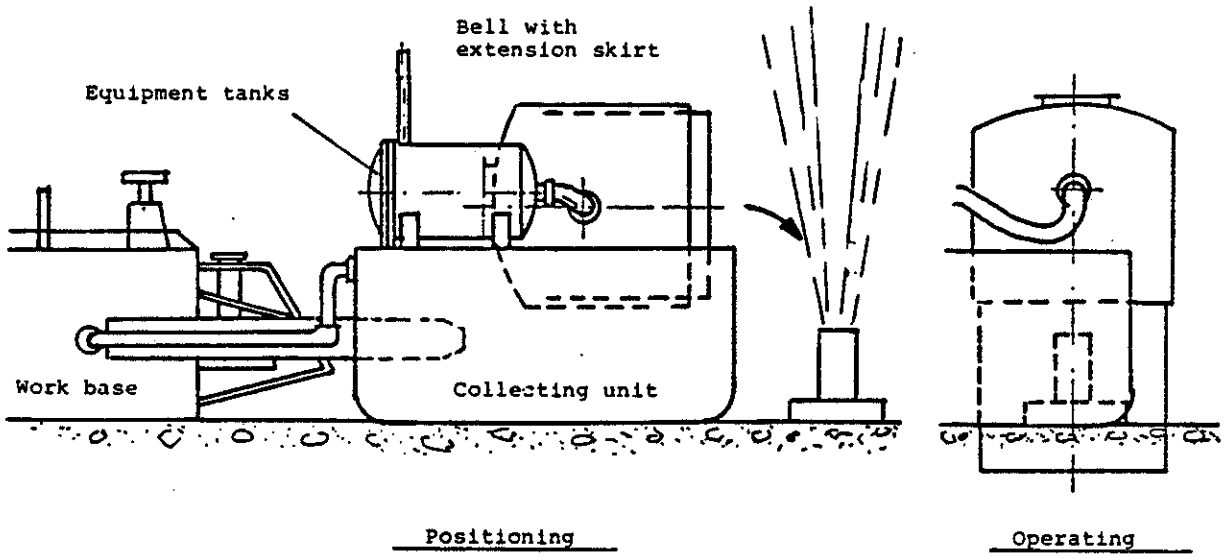

U.S. DEPARTMENT OF THE INTERIOR MINERALS MANAGEMENT SERVICE	SCALE: NONE	TITLE OF DRAWING:
	DRAWN BY: A.FOX DATE 7-31-85	COLLECTING BELL, REVISED
Brown & Root Development, Inc. HOUSTON, TEXAS	CHECKED BY: ANLS DATE 8-20-85	VERSION
	APPROVED: SEF DATE 8-20-85	(SI / NUI)
	CUSTOMER APPROVAL	CONTRACT NUMBER XC-0030 / DRAWING NUMBER FIGURE 2.3-26

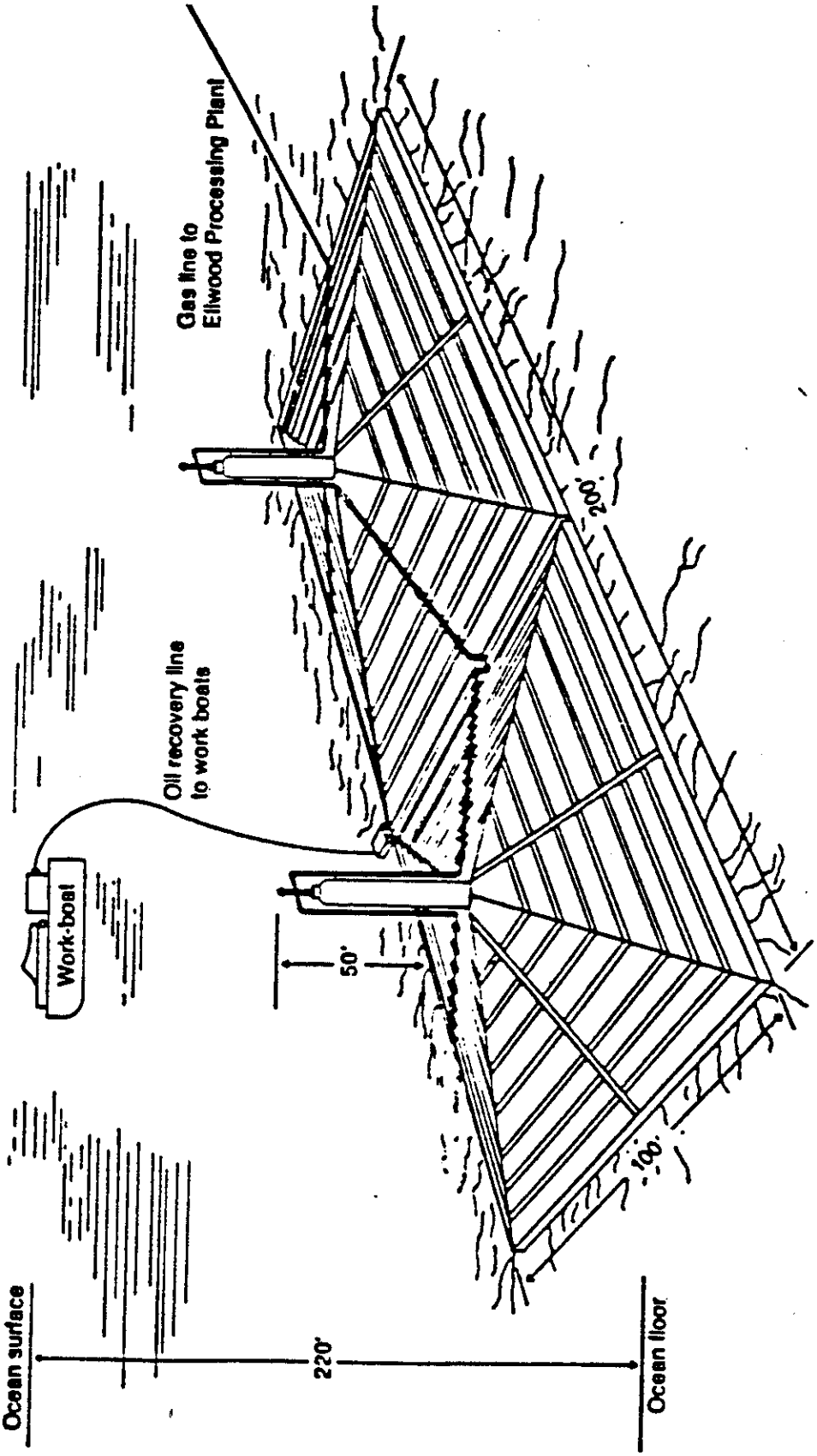

U.S. DEPARTMENT OF THE INTERIOR
MINERALS MANAGEMENT SERVICE

Brown & Root Development, Inc.
HOUSTON, TEXAS

SCALE: NONE	TITLE OF DRAWING:
DRAWN BY: E.H.S. DATE 8-16-85	COAL OIL POINT SEEP CONTAINMENT
CHECKED BY: ANLS DATE 8-20-85	PROJECT SEEP RECOVERY SYSTEM
APPROVED: EEB DATE 8-20-85	
CUSTOMER APPROVAL	CONTRACT NUMBER XC-0030 / DRAWING NUMBER FIGURE 2.3-27

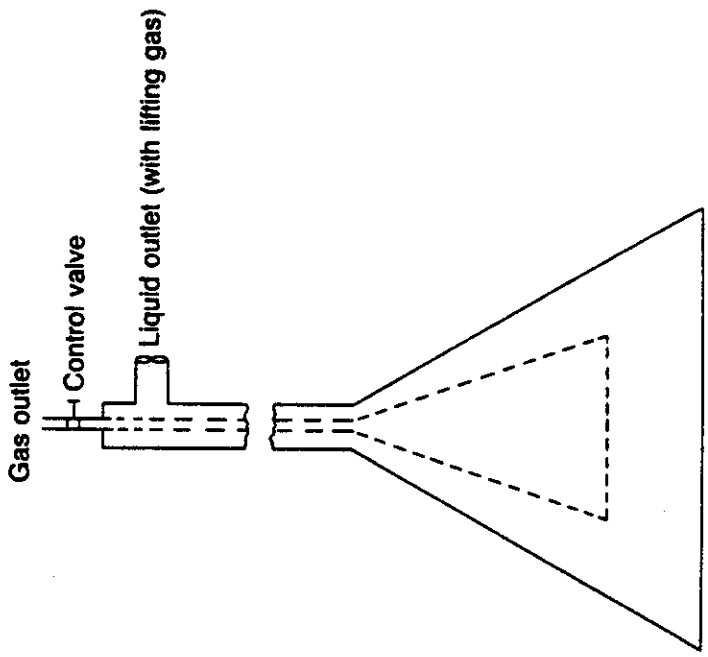

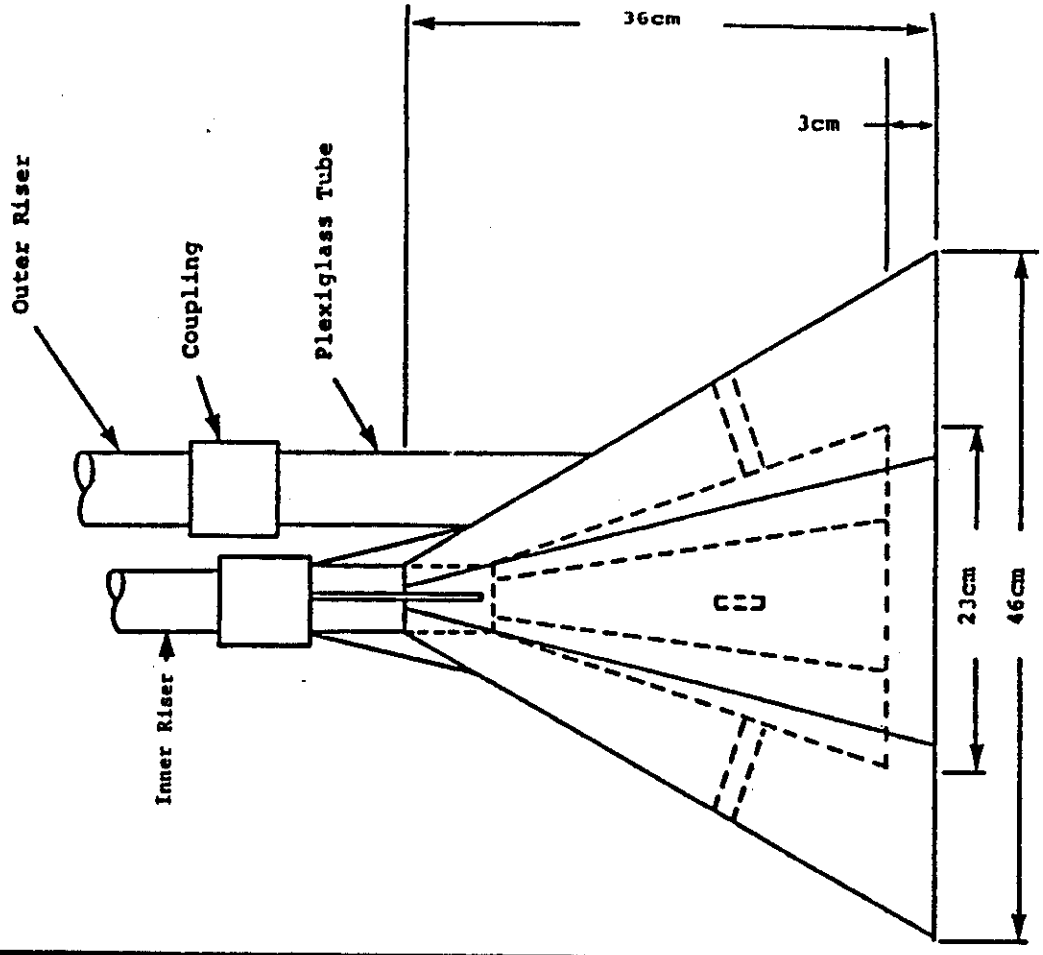

U.S. DEPARTMENT OF THE INTERIOR
MINERALS MANAGEMENT SERVICE

Brown & Root Development, Inc.
HOUSTON, TEXAS

SCALE: NONE	TITLE OF DRAWING: MILGRAM'S TEST MODEL SEPARATING COLLECTOR
DRAWN BY: E.H.S. DATE: 8-16-85	
CHECKED BY: ANLS DATE: 8-20-85	
APPROVED: DATE: 8-26-85	
CUSTOMER APPROVAL	CONTRACT NUMBER: XC-0030
	DRAWING NUMBER: FIGURE 2.3-28

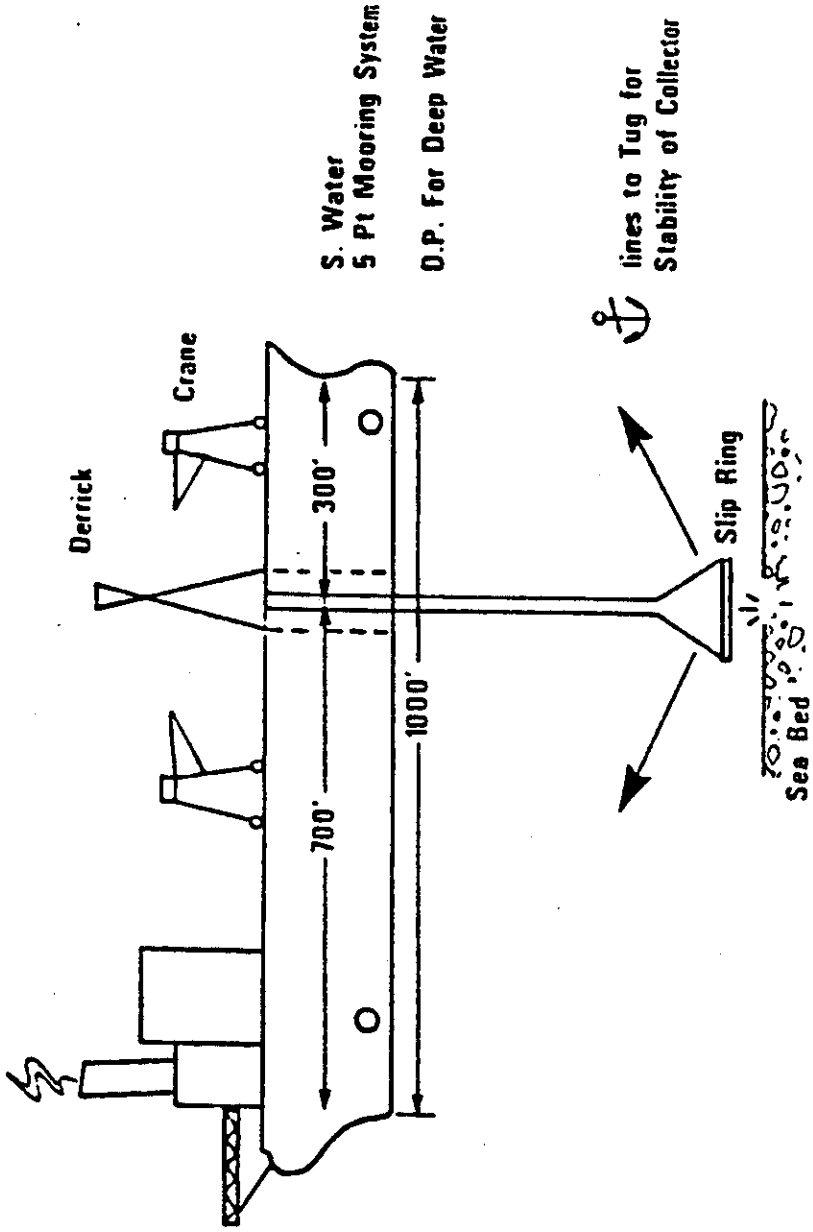

U.S. DEPARTMENT OF THE INTERIOR MINERALS MANAGEMENT SERVICE	SCALE: NONE	TITLE OF DRAWING:
	DRAWN BY: E.H.S. DATE 6-16-85	T. ROBINSON 100,000 DWT TANKER
Brown & Root Development, Inc. HOUSTON, TEXAS	CHECKED BY: ANLS DATE 8-20-85	AND SUBSEA CONTAINMENT
	APPROVED: EEO DATE 8-20-85	SYSTEM CONCEPT
	CUSTOMER APPROVAL	CONTRACT NUMBER XC-0030 / DRAWING NUMBER FIGURE 2.3-29

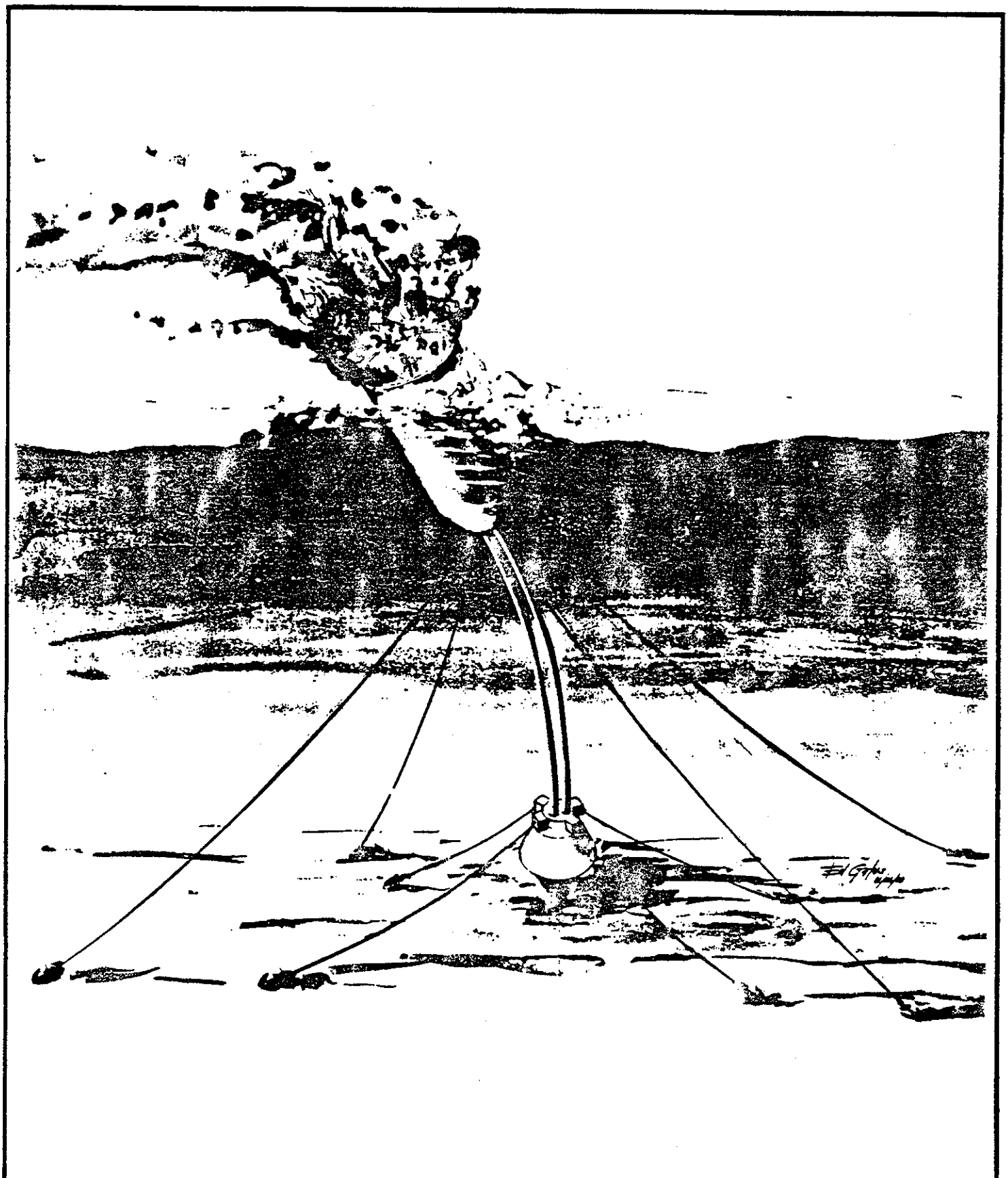

U.S. DEPARTMENT OF THE INTERIOR
MINERALS MANAGEMENT SERVICE

Brown & Root Development, Inc.
HOUSTON, TEXAS

SCALE: NONE	TITLE OF DRAWING:
DRAWN BY: A. FOX — DATE: 7-31-85	PROPOSED SUBSEA CONTAINMENT SYSTEM (COOSRA/DOME)
CHECKED BY: ANLS — DATE: 8-20-85	
APPROVED: G.E.F — DATE: 8-20-85	
CUSTOMER APPROVAL	CONTRACT NUMBER: XC-0030 — DRAWING NUMBER: FIGURE 2.3-30

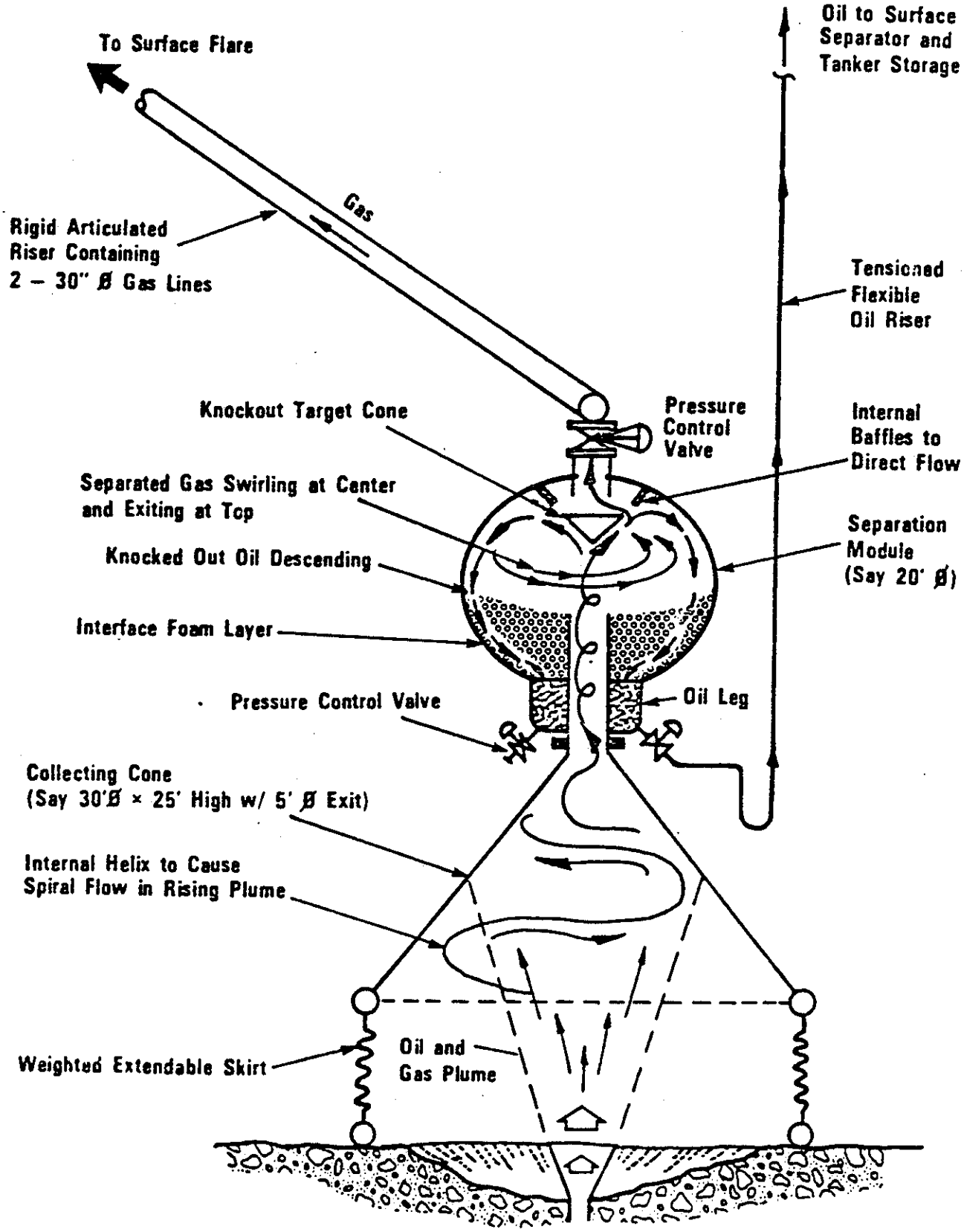

U.S. DEPARTMENT OF THE INTERIOR MINERALS MANAGEMENT SERVICE	SCALE: NONE	TITLE OF DRAWING: T. G. STARR SEPARATING COLLECTOR
Brown & Root Development, Inc. HOUSTON, TEXAS	DRAWN BY: E.H.S. DATE 8-16-85	
	CHECKED BY: ANLS DATE 8-20-85	
	APPROVED: EE DATE 8-20-85	
	CUSTOMER APPROVAL	CONTRACT NUMBER XC-0030 / DRAWING NUMBER FIGURE 2.3-31

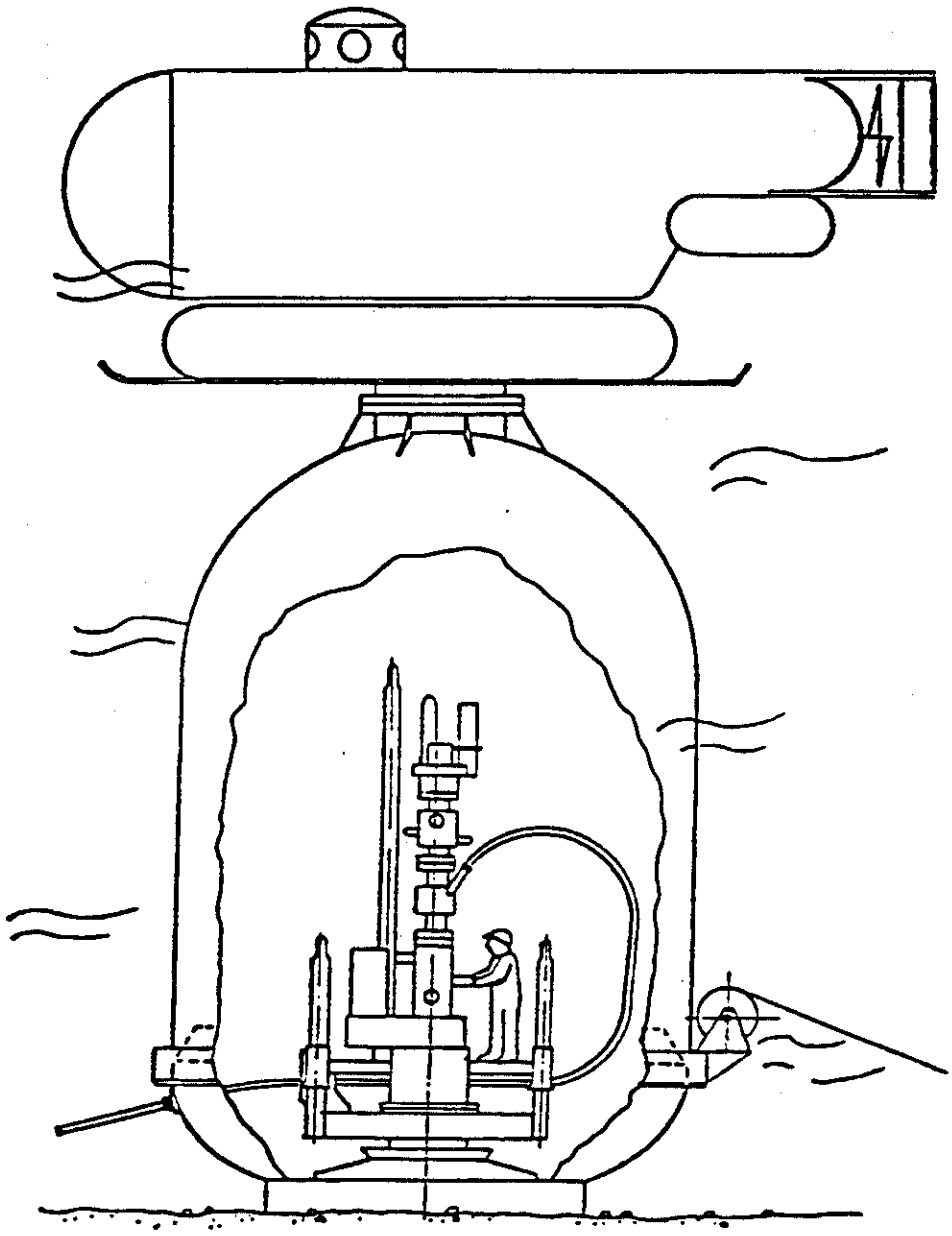

U.S. DEPARTMENT OF THE INTERIOR
MINERALS MANAGEMENT SERVICE

Brown & Root Development, Inc.
HOUSTON, TEXAS

SCALE: NONE	TITLE OF DRAWING: ATMOSPHERIC INTERVENTION ON A SUB SEA WELL HEAD USING THE TEACUP (NUTEC)
DRAWN BY: E.H.S. DATE 8-16-85	
CHECKED BY: ANLS DATE 8-20-85	
APPROVED: DATE 8-20-85	
CUSTOMER APPROVAL	CONTRACT NUMBER XC-0030 / DRAWING NUMBER FIGURE 2.3-32

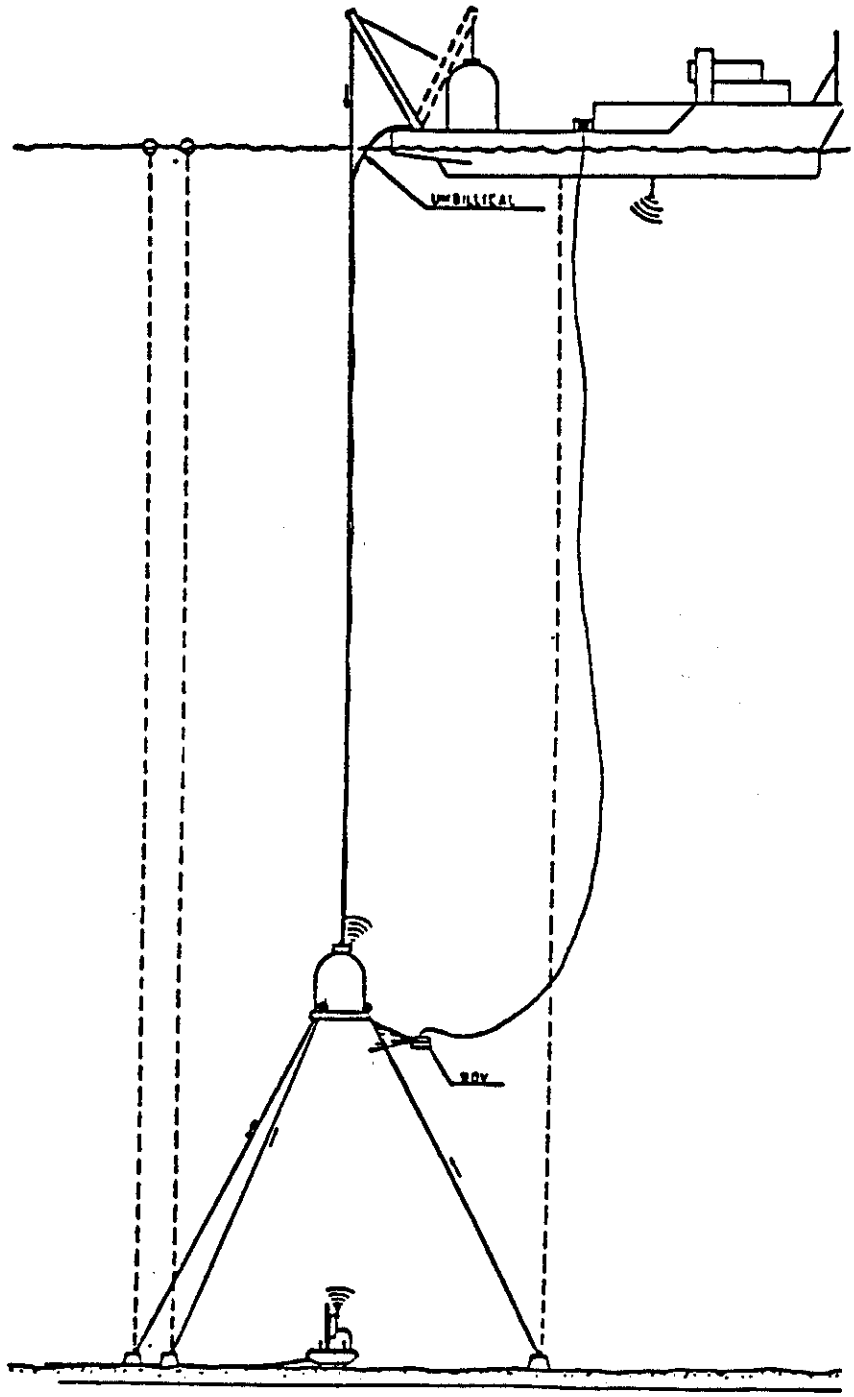

U.S. DEPARTMENT OF THE INTERIOR
MINERALS MANAGEMENT SERVICE

Brown & Root Development, Inc.
HOUSTON, TEXAS

SCALE: NONE	TITLE OF DRAWING: INSTALLATION OF THE TEACUP FOR ATMOSPHERIC INTERVENTION
DRAWN BY: E.H.S. DATE 8-16-85	
CHECKED BY: ANLS DATE 8-20-85	
APPROVED: EED DATE 8-20-85	
CUSTOMER APPROVAL	CONTRACT NUMBER XC-0030 / DRAWING NUMBER FIGURE 2.3-32A

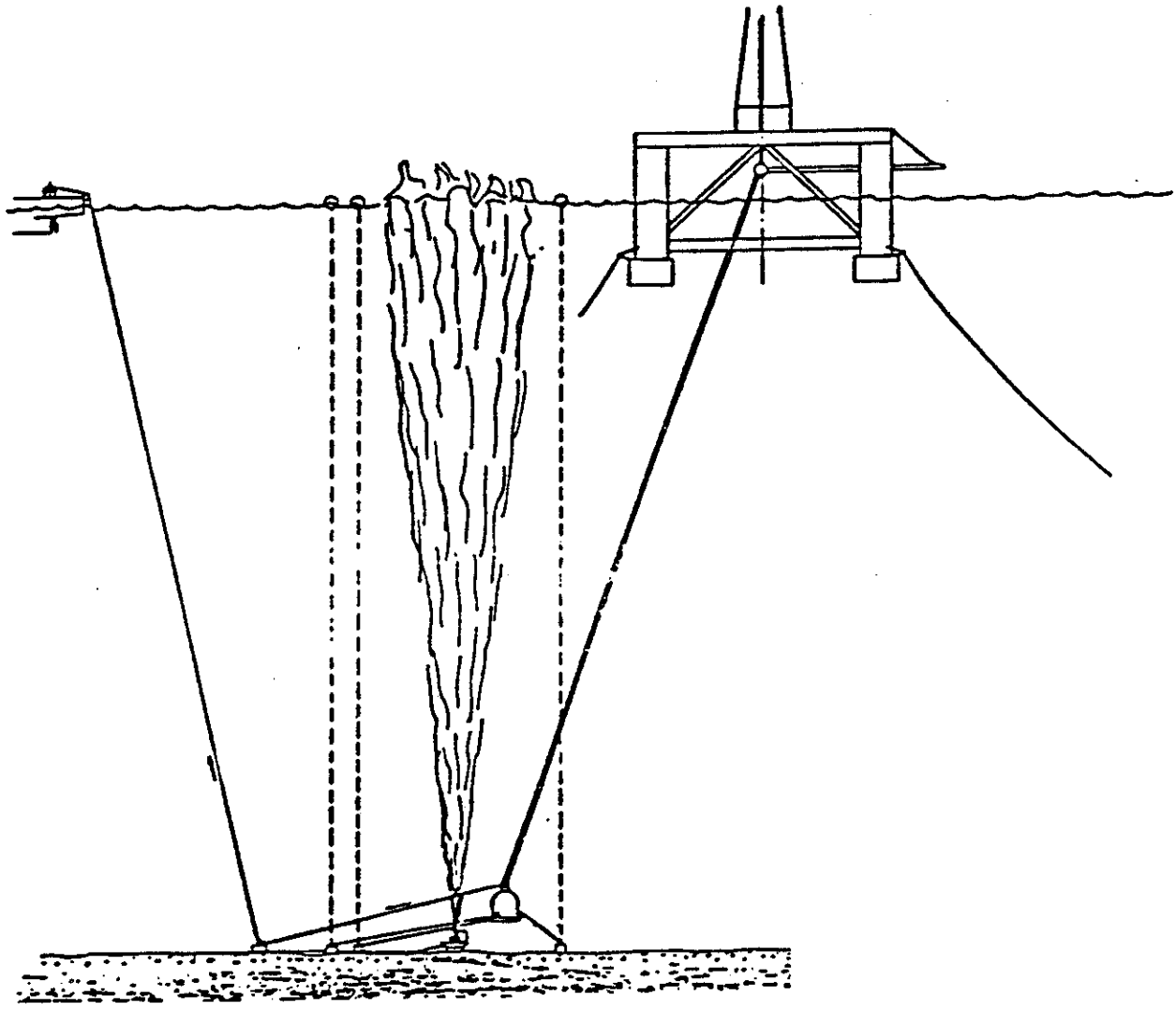

U.S. DEPARTMENT CF THE INTERIOR
MINERALS MANAGEMENT SERVICE

Brown & Root Development, Inc.
HOUSTON, TEXAS

SCALE: NONE	TITLE OF DRAWING:
DRAWN BY: E.H.S. DATE 8-16-85	INSTALLATION OF THE TEACUP FOR
CHECKED BY: ANLS DATE 8-20-85	BLOW OUT CONTAINMENT
APPROVED: EEJ DATE 8-20-85	
CUSTOMER APPROVAL	CONTRACT NUMBER XC-0030 / DRAWING NUMBER FIGURE 2.3-32B

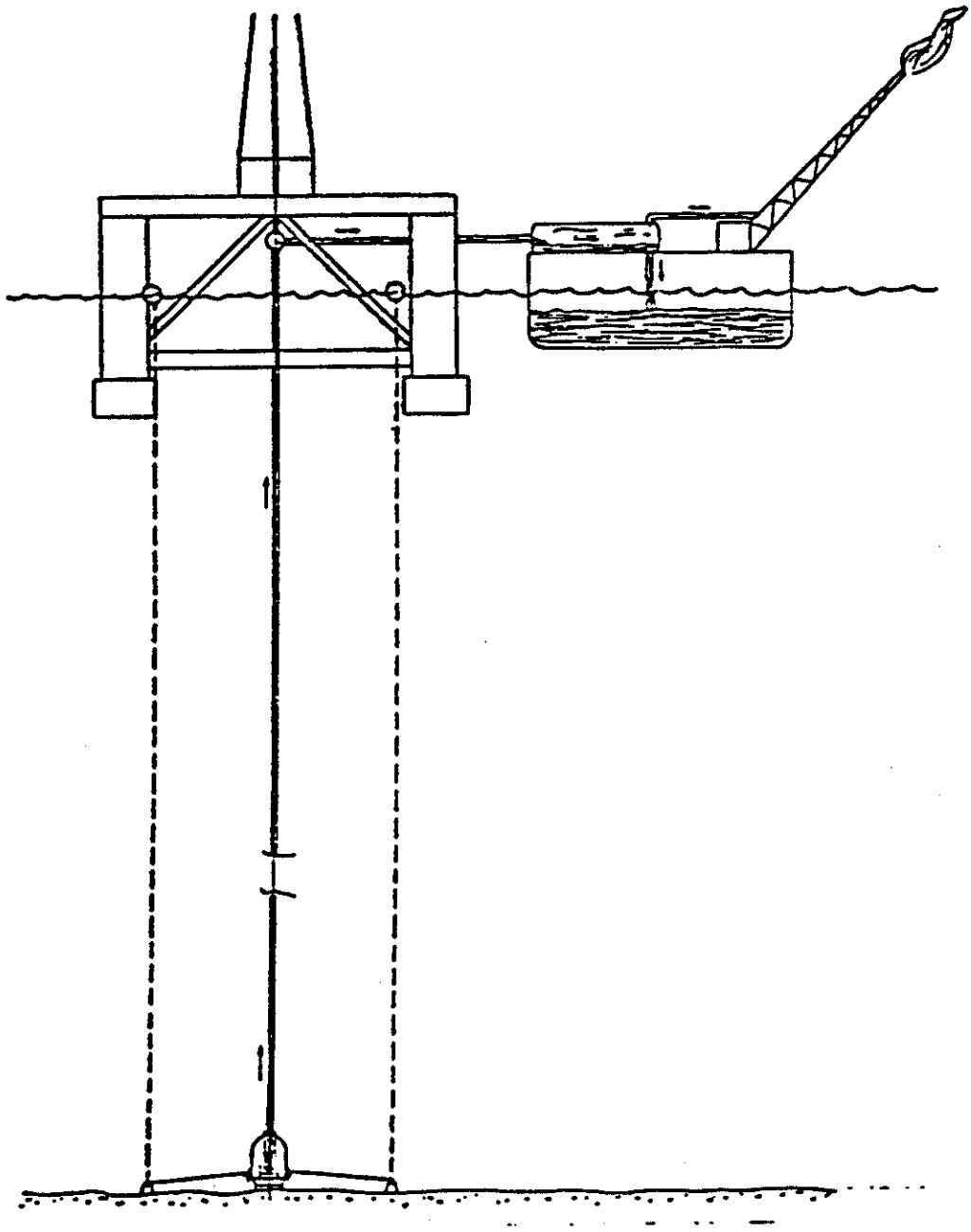

U.S. DEPARTMENT OF THE INTERIOR
MINERALS MANAGEMENT SERVICE

Brown & Root Development, Inc.
HOUSTON, TEXAS

SCALE: NONE	TITLE OF DRAWING: BLOW OUT CONTAINMENT USING THE TEACUP
DRAWN BY: E.H.S. DATE 8-16-85	
CHECKED BY: ANLS DATE 8-20-85	
APPROVED: EEB DATE 8-20-85	
CUSTOMER APPROVAL	CONTRACT NUMBER XC-0030 / DRAWING NUMBER FIGURE 2.3-32C

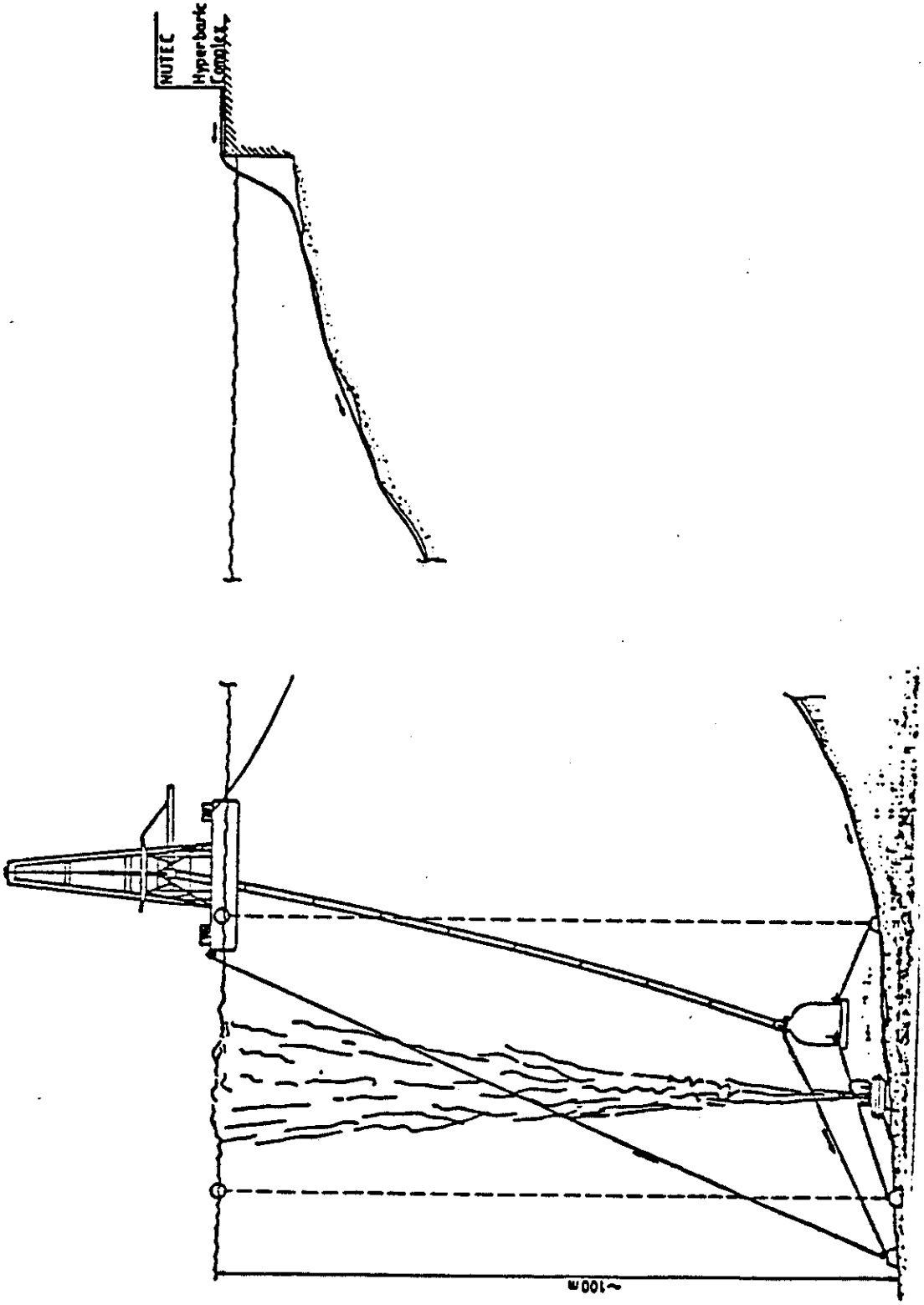

U.S. DEPARTMENT OF THE INTERIOR MINERALS MANAGEMENT SERVICE	SCALE: NONE	TITLE OF DRAWING:
	DRAWN BY: E.H.S. DATE 8-16-85	FULL SCALE TEST OF THE TEACUP
Brown & Root Development, Inc. HOUSTON, TEXAS	CHECKED BY: ANLS DATE 8-20-85	USED FOR BLOW OUT CONTAINMENT
	APPROVED: EEP DATE 8-20-85	
	CUSTOMER APPROVAL	CONTRACT NUMBER XC-0030 / DRAWING NUMBER FIGURE 2.3-32D

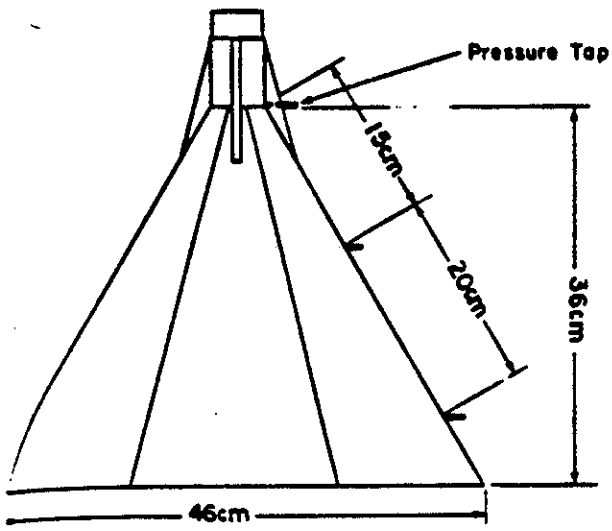

Collector #1 (Standard)

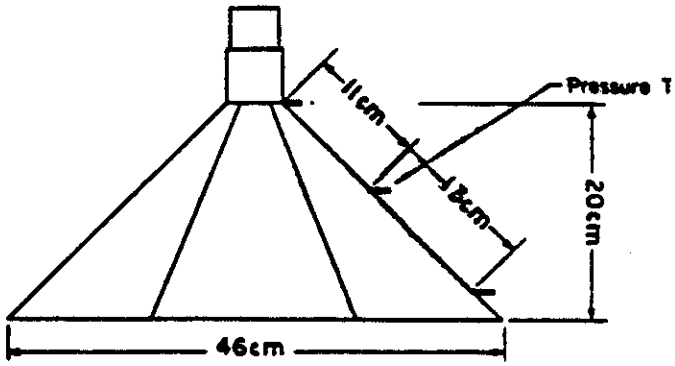

Collector #3 (Flat)

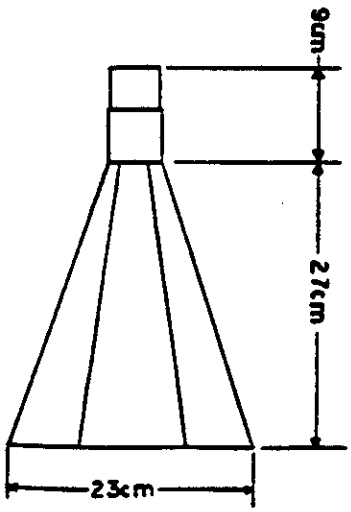

Collector #4 (Small)

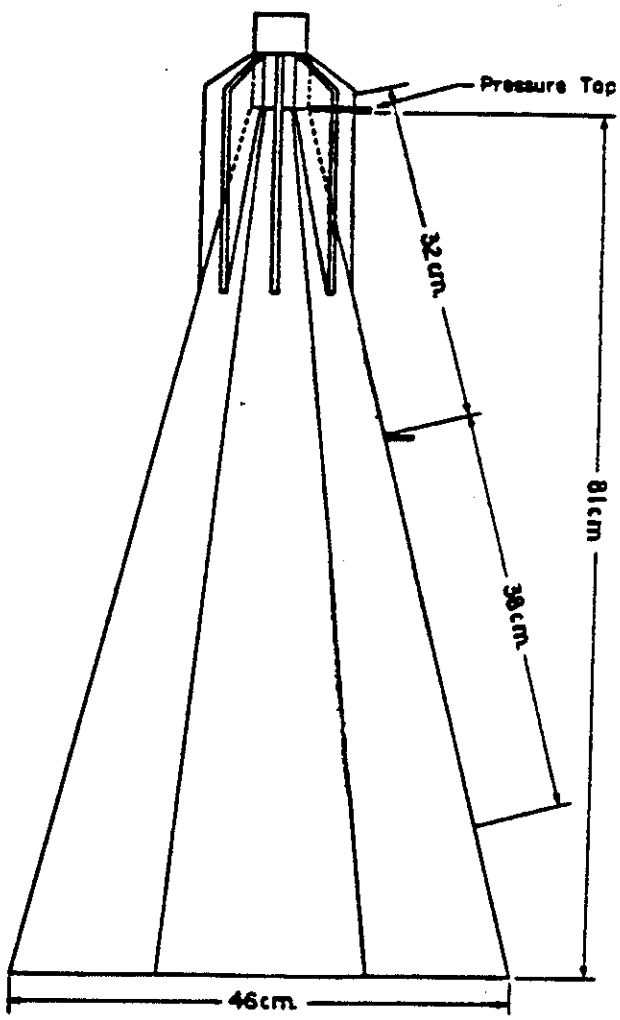

Collector #2 (Tall)

U.S. DEPARTMENT OF THE INTERIOR MINERALS MANAGEMENT SERVICE	SCALE: NONE	TITLE OF DRAWING:
	DRAWN BY: E.H.S. DATE 8-16-85	LABORATORY SINGLE CONE TEST
Brown & Root Development, Inc. HOUSTON, TEXAS	CHECKED BY: ANLS DATE 8-20-85	COLLECTORS (MILGRAM & BURGESS)
	APPROVED: EEO DATE 8-20-85	
	CUSTOMER APPROVAL	CONTRACT NUMBER XC-0030 / DRAWING NUMBER FIGURE 2.3-33

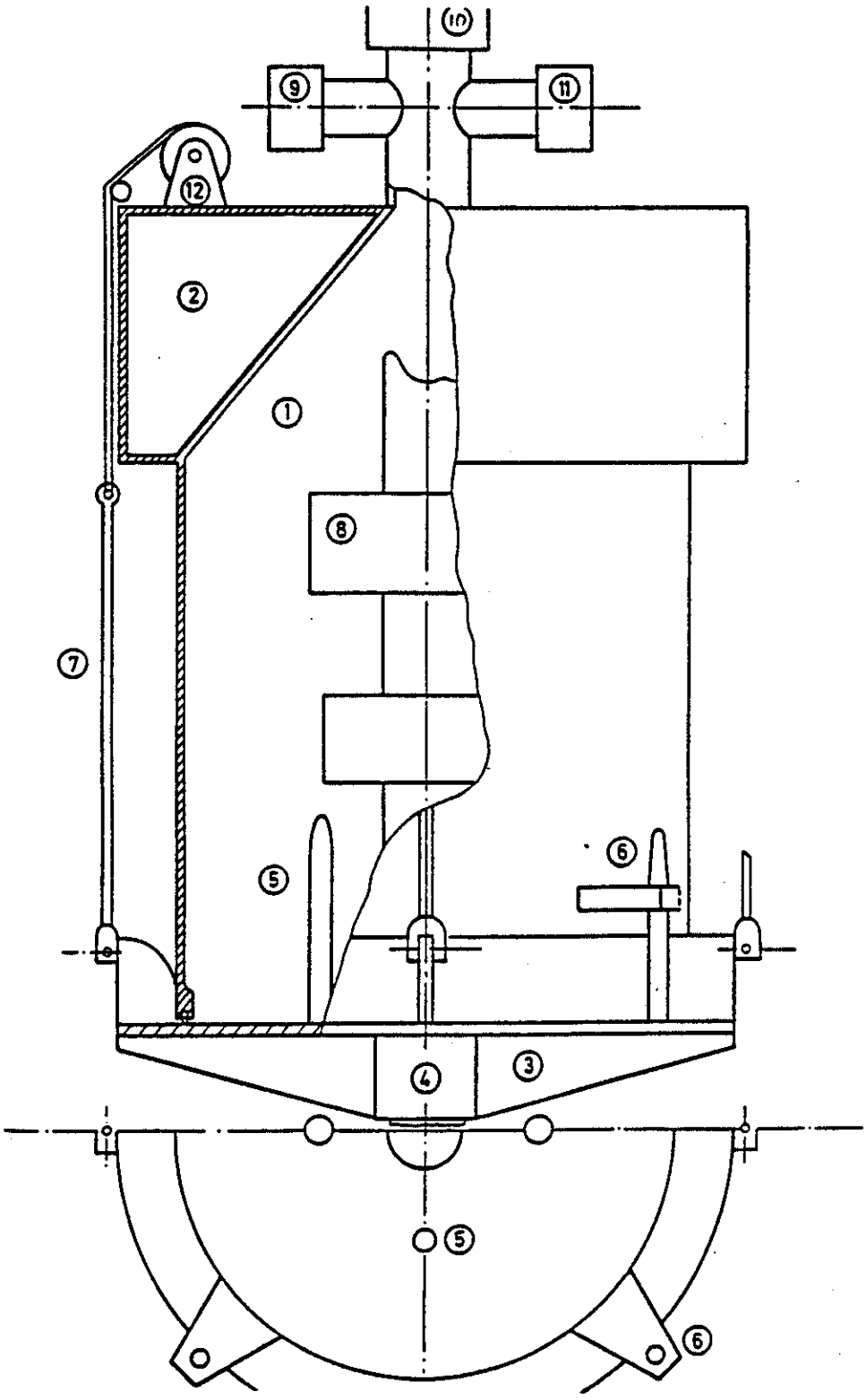

U.S. DEPARTMENT OF THE INTERIOR
MINERALS MANAGEMENT SERVICE

Brown & Root Development, Inc.
HOUSTON, TEXAS

SCALE: NONE	TITLE OF DRAWING:
DRAWN BY: E.H.S. DATE 8-16-85	WESTERGAARD'S COLLECTION BELL
CHECKED BY: ANLS DATE 8-20-85	WITH A SPECIAL RECEPTACLE
APPROVED: EEI DATE 8-20-85	
CUSTOMER APPROVAL	CONTRACT NUMBER XC-0030 / DRAWING NUMBER FIGURE 2.3-34

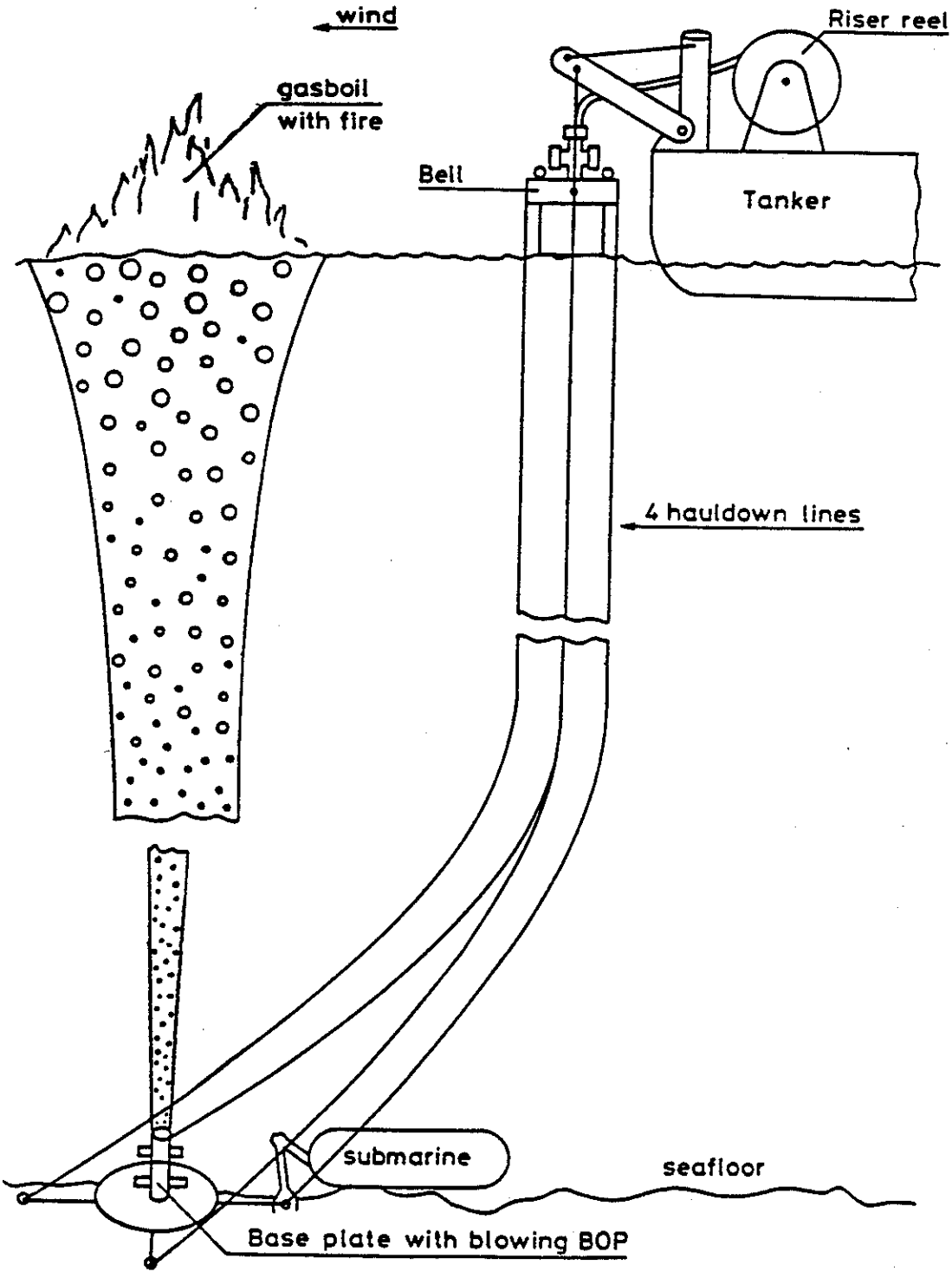

First step attaching hauldown lines

U.S. DEPARTMENT OF THE INTERIOR
MINERALS MANAGEMENT SERVICE

Brown & Root Development, Inc.
HOUSTON, TEXAS

SCALE: NONE	TITLE OF DRAWING: DEPLOYMENT OF WESTERGAARD'S COLLECTING BELL
DRAWN BY: E.H.S. DATE: 8-16-85	
CHECKED BY: ANLS DATE: 8-20-85	
APPROVED BY: DATE: 8-20-85	
CUSTOMER APPROVAL	CONTRACT NUMBER: XC-0030
	DRAWING NUMBER: FIGURE 2.3-35

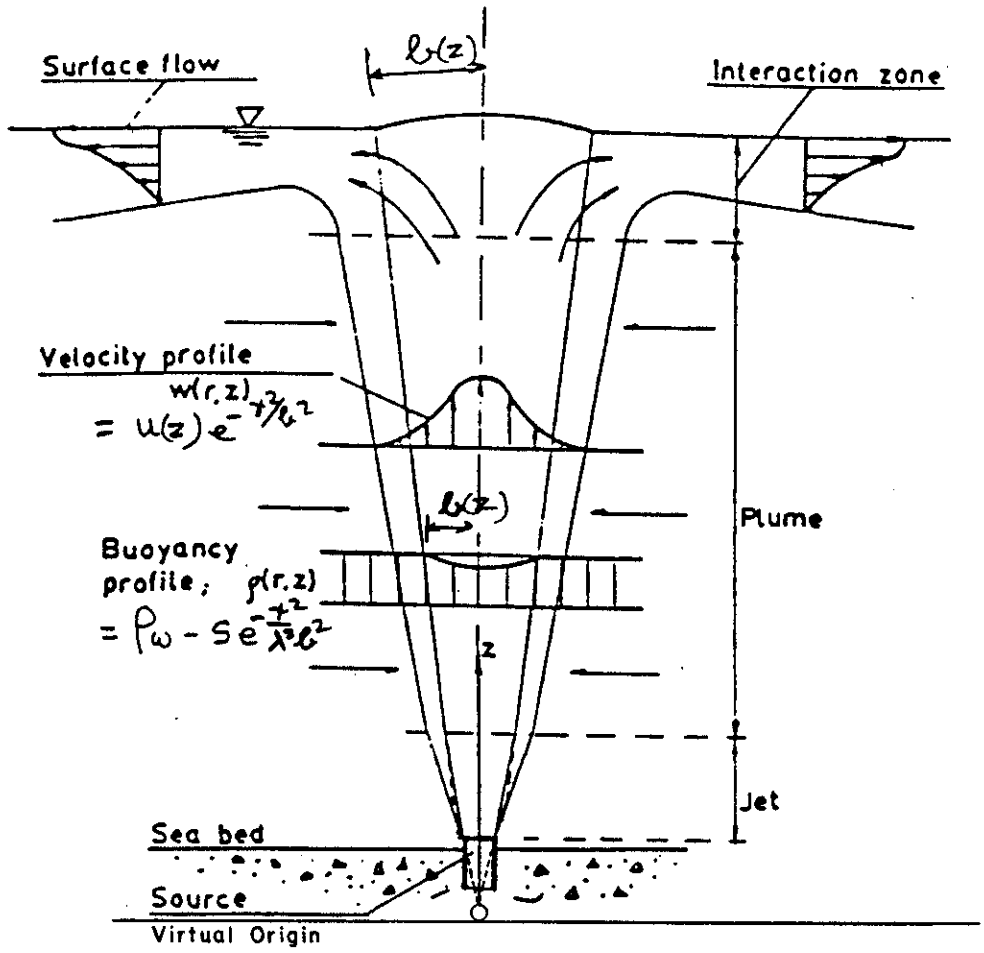

U.S. DEPARTMENT OF THE INTERIOR MINERALS MANAGEMENT SERVICE	SCALE: NONE	TITLE OF DRAWING:
	DRAWN BY: A. FOX DATE 8-1-85	SCHEMATIC OUTLINE OF AN
Brown & Root Development, Inc. HOUSTON, TEXAS	CHECKED BY: ANLS DATE 8-20-85	UNDERWATER BLOWOUT
	APPROVED: DATE 8-20-85	
	CUSTOMER APPROVAL	CONTRACT NUMBER XC-0030 / DRAWING NUMBER FIGURE 2.3-37

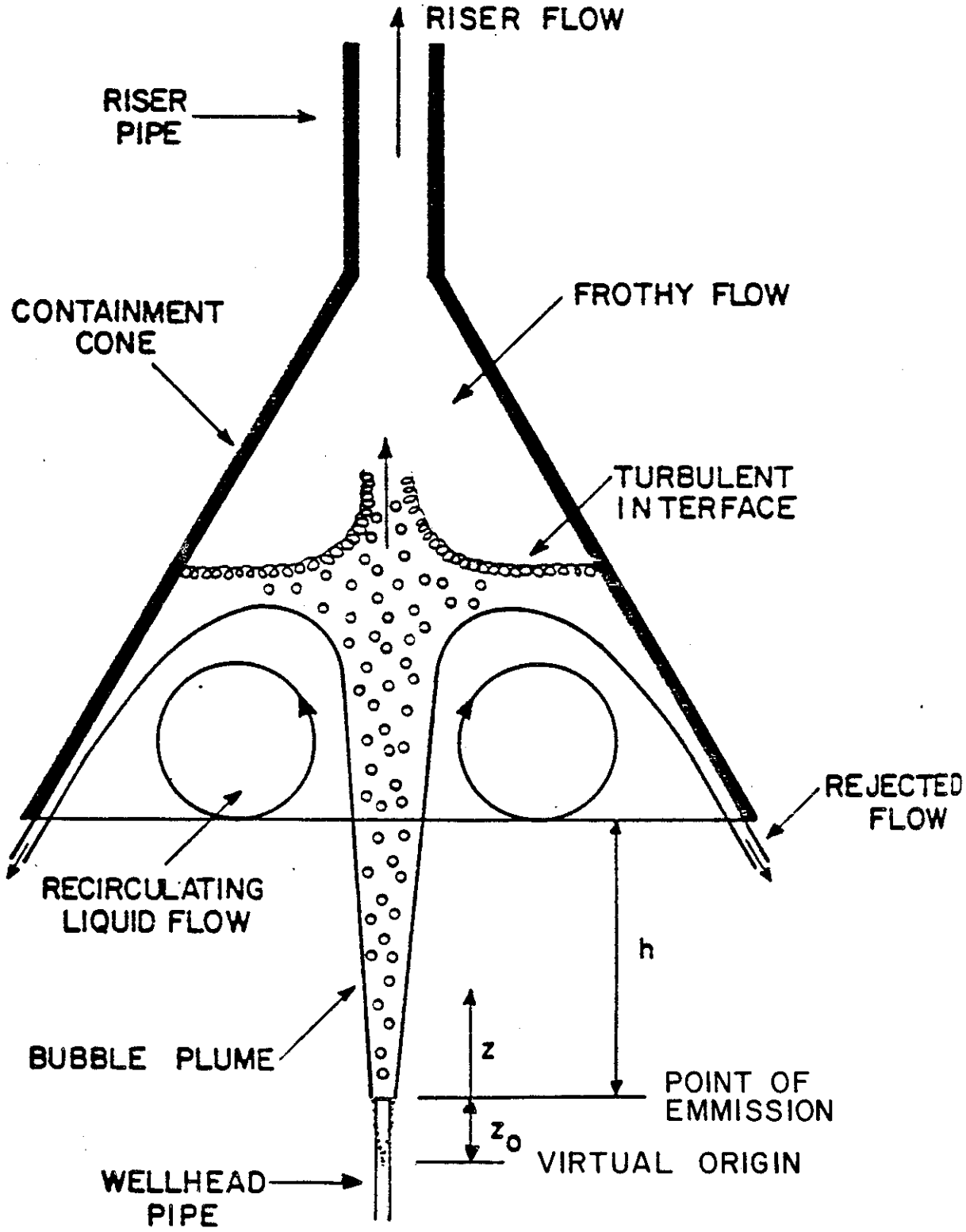

U.S. DEPARTMENT OF THE INTERIOR
MINERALS MANAGEMENT SERVICE

Brown & Root Development, Inc.
HOUSTON, TEXAS

SCALE: NONE	TITLE OF DRAWING: FLOW PATTERN WITHIN COLLECTOR
DRAWN BY: A. FOX — DATE: 8-1-85	
CHECKED BY: ANLS — DATE: 8-20-85	
APPROVED: EEP — DATE: 8-21-85	
CUSTOMER APPROVAL	CONTRACT NUMBER: XC-0030 — DRAWING NUMBER: FIGURE 2.3-38

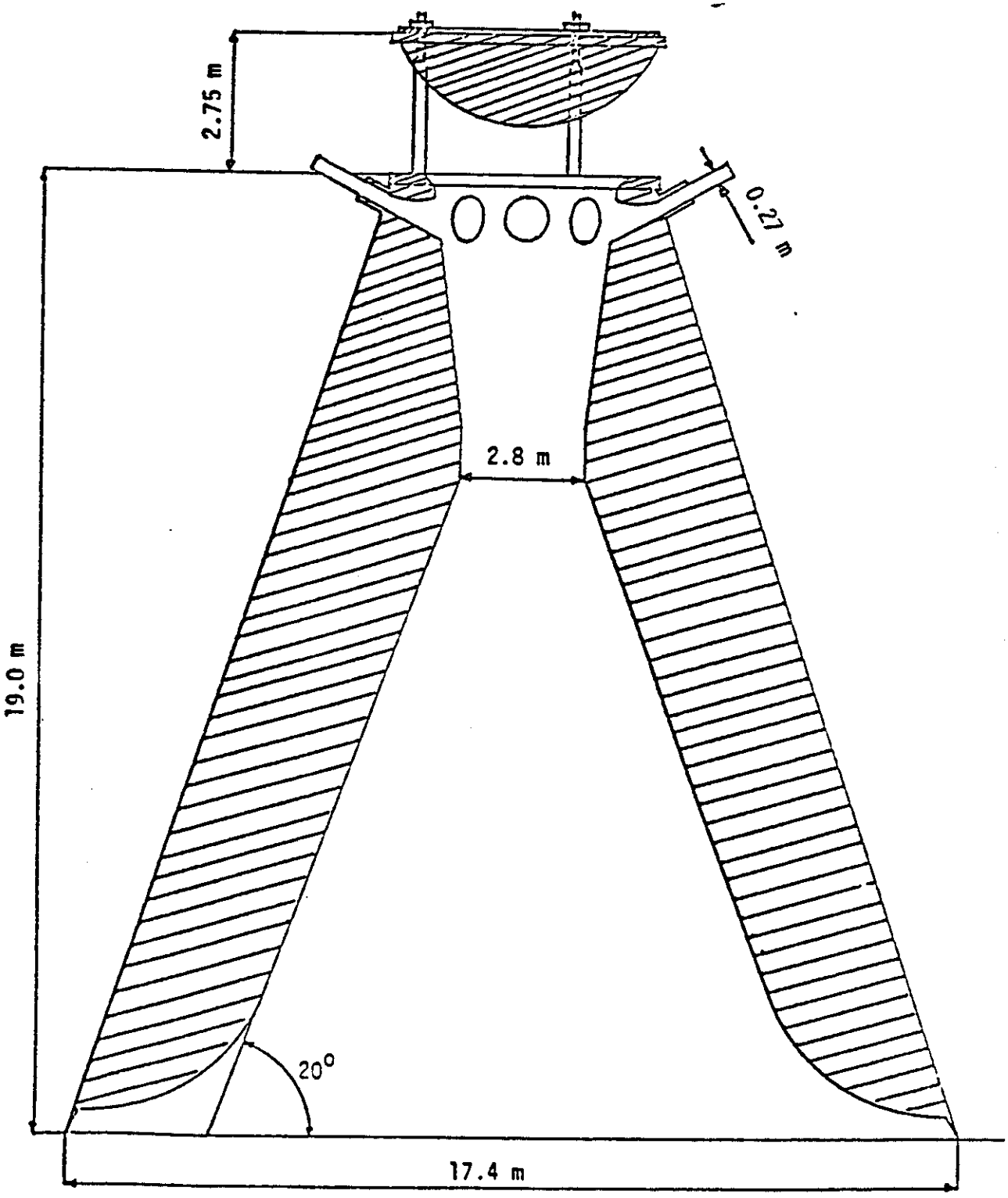

U.S. DEPARTMENT OF THE INTERIOR
MINERALS MANAGEMENT SERVICE

Brown & Root Development, Inc.
HOUSTON, TEXAS

SCALE: NONE	TITLE OF DRAWING:
DRAWN BY: E.H.S. DATE 8-16-85	TEIGEN'S TEST MODEL, CROSS-
CHECKED BY: ANLS DATE 8-20-85	SECTION OF MODEL STRUCTURE
APPROVED: DATE 8-20-85	(DIMENSIONS ARE FOR FULL
CUSTOMER APPROVAL	SIZE UNIT)
CONTRACT NUMBER XC-0030	DRAWING NUMBER FIGURE 2.3-39

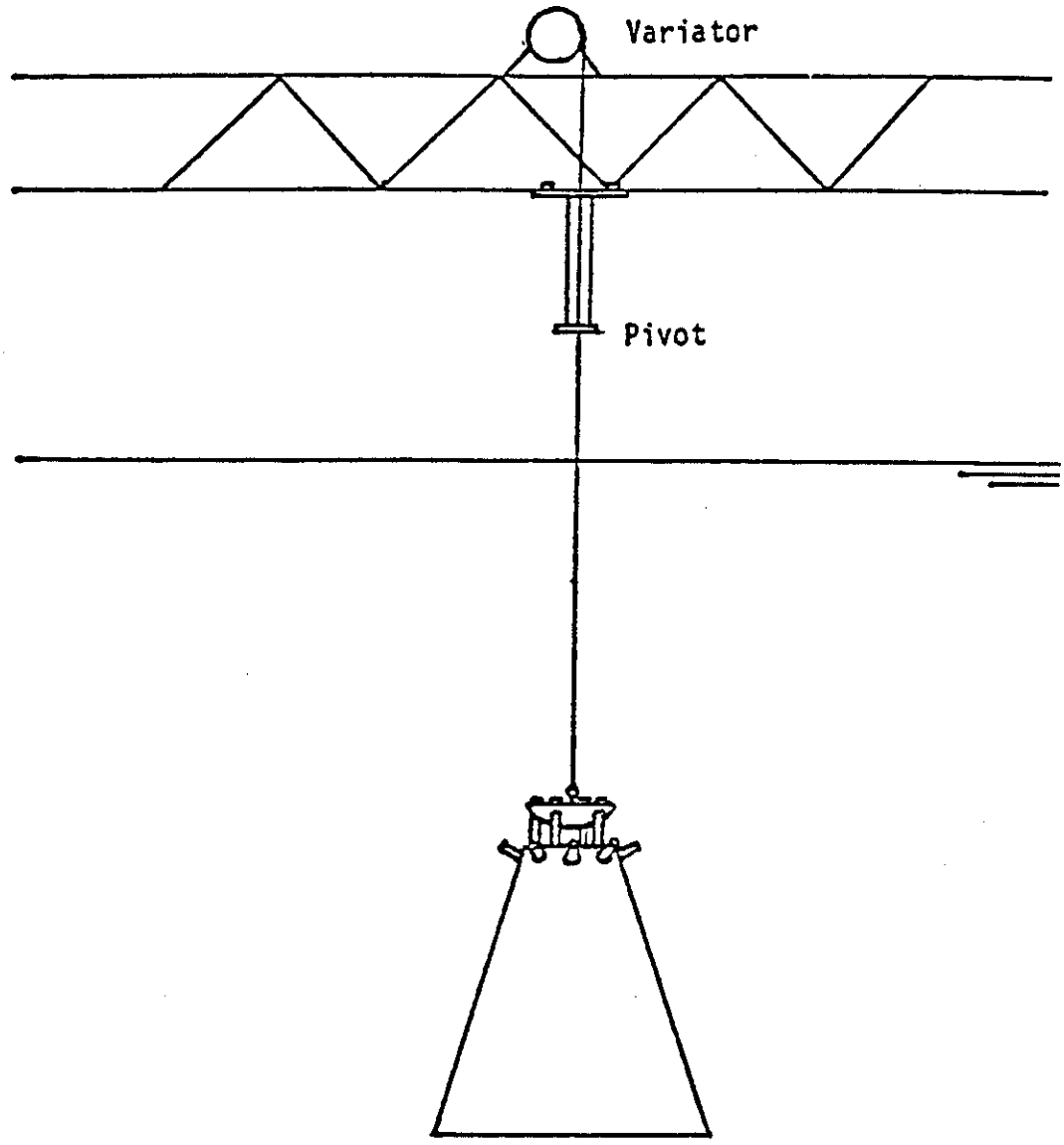

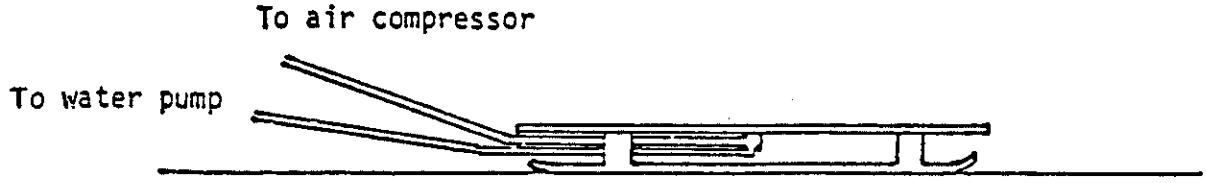

U.S. DEPARTMENT OF THE INTERIOR
MINERALS MANAGEMENT SERVICE

Brown & Root Development, Inc.
HOUSTON, TEXAS

SCALE: NONE	TITLE OF DRAWING: TEIGEN'S TEST, EXPERIMENTAL SET UP
DRAWN BY: E.H.S. DATE 8-16-85	
CHECKED BY: ANLS DATE 8-20-85	
APPROVED: EEB DATE 8-20-85	
CUSTOMER APPROVAL	CONTRACT NUMBER XC-0030 / DRAWING NUMBER FIGURE 2.3-40

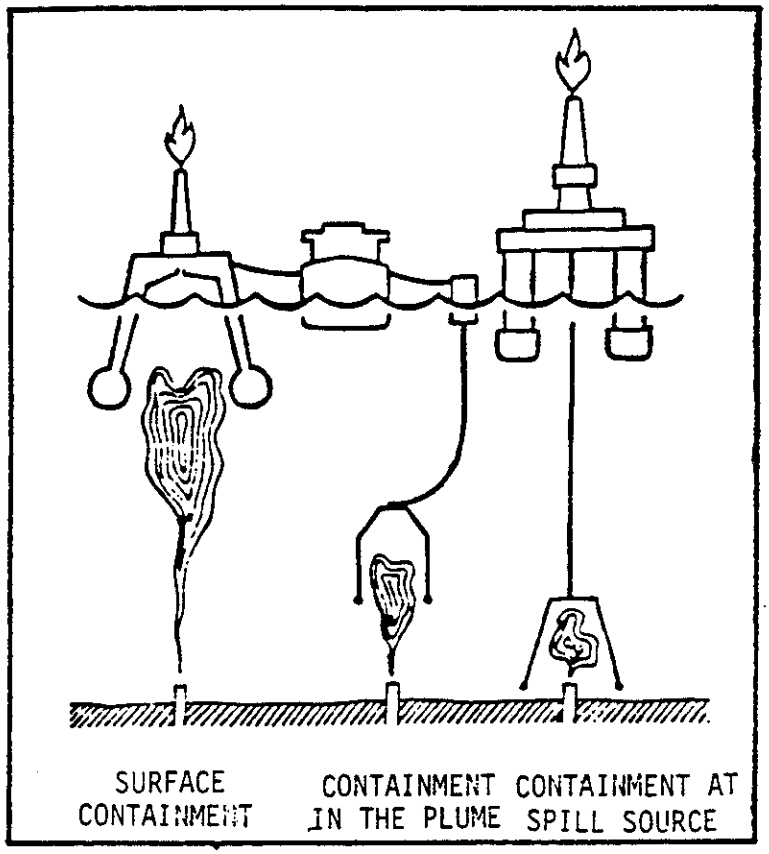

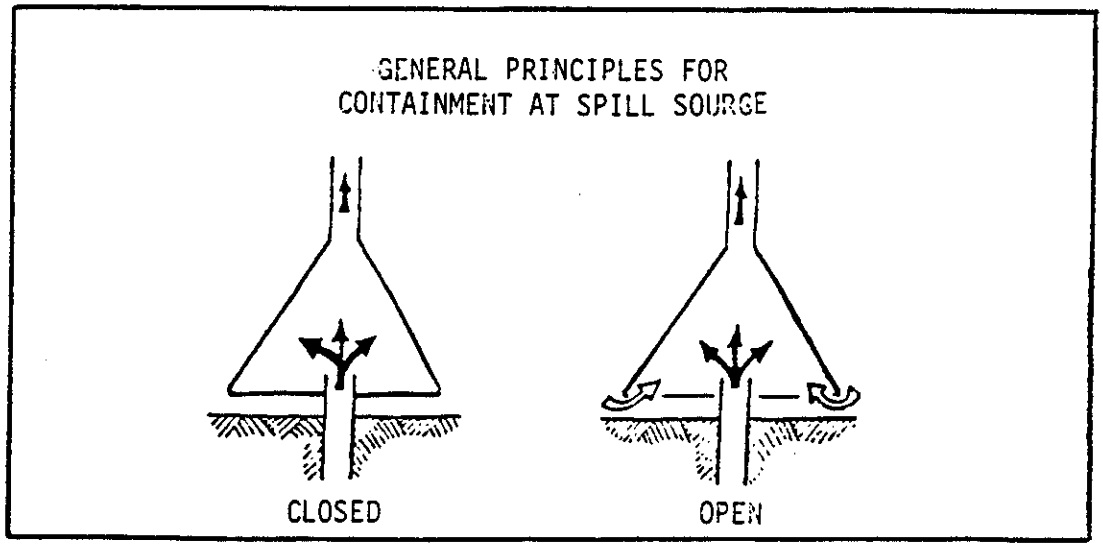

U.S. DEPARTMENT OF THE INTERIOR
MINERALS MANAGEMENT SERVICE

Brown & Root Development, Inc.
HOUSTON, TEXAS

SCALE: NONE	TITLE OF DRAWING: CONTAINMENT PRINCIPLES
DRAWN BY: E.H.S. DATE 8-16-85	
CHECKED BY: ANLS DATE 8-20-85	
APPROVED: EEB DATE 8-20-85	
CUSTOMER APPROVAL	CONTRACT NUMBER XC-0030 / DRAWING NUMBER FIGURE 2.3-41

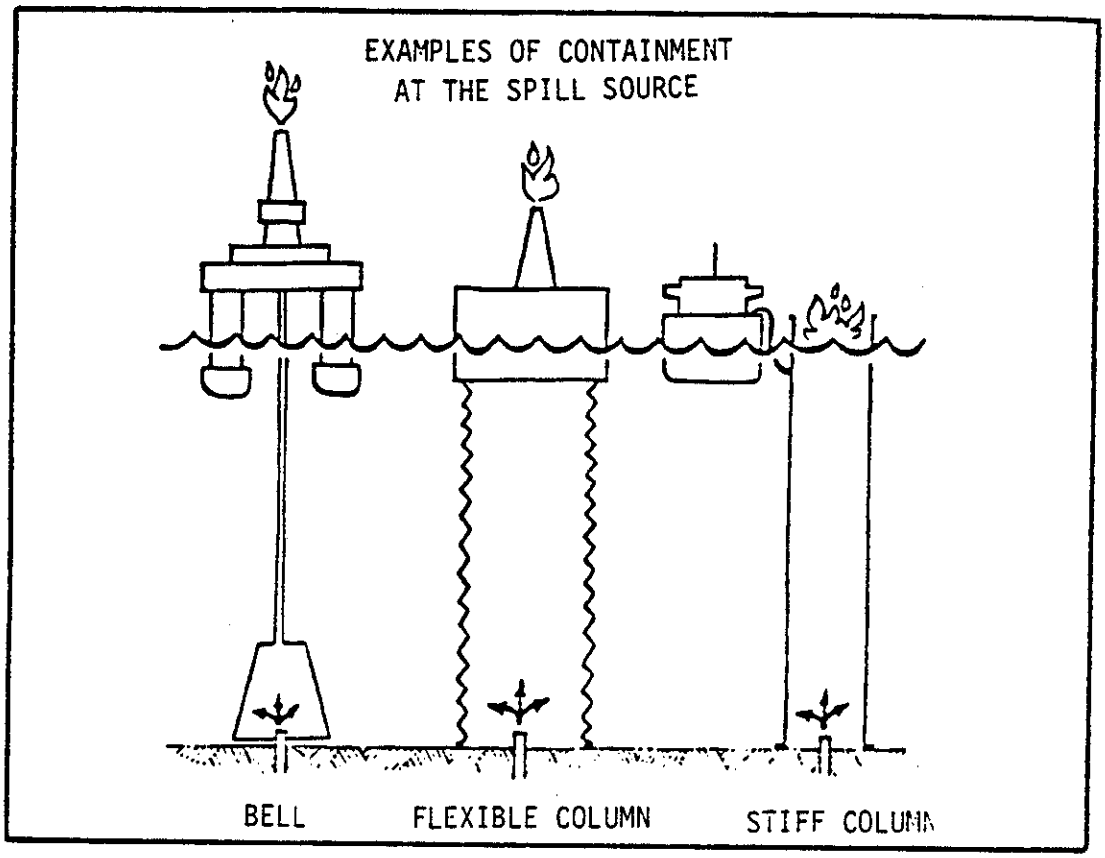

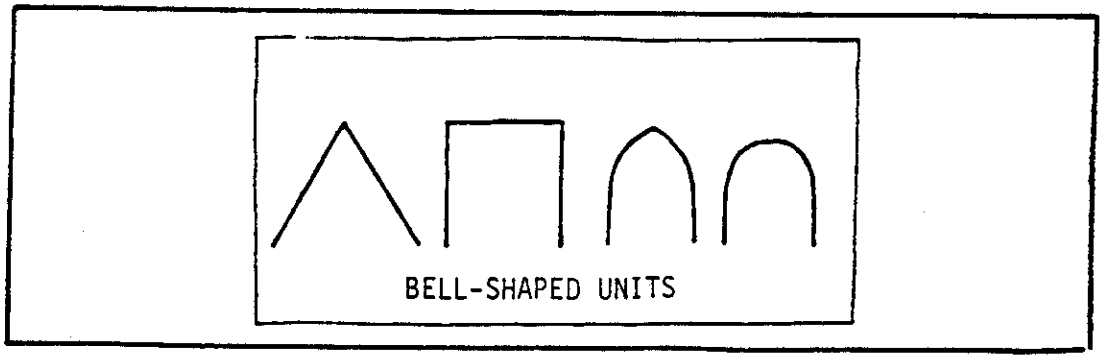

U.S. DEPARTMENT OF THE INTERIOR
MINERALS MANAGEMENT SERVICE

Brown & Root Development, Inc.
HOUSTON, TEXAS

SCALE: NONE	TITLE OF DRAWING: EXAMPLES OF CONTAINMENT AT THE SPILL SOURCE
DRAWN BY: E.H.S. DATE 8-16-85	
CHECKED BY: ANLS DATE 8-20-85	
APPROVED: EEF DATE 8-20-85	
CUSTOMER APPROVAL	CONTRACT NUMBER XC-0030 / DRAWING NUMBER FIGURE 2.3-42

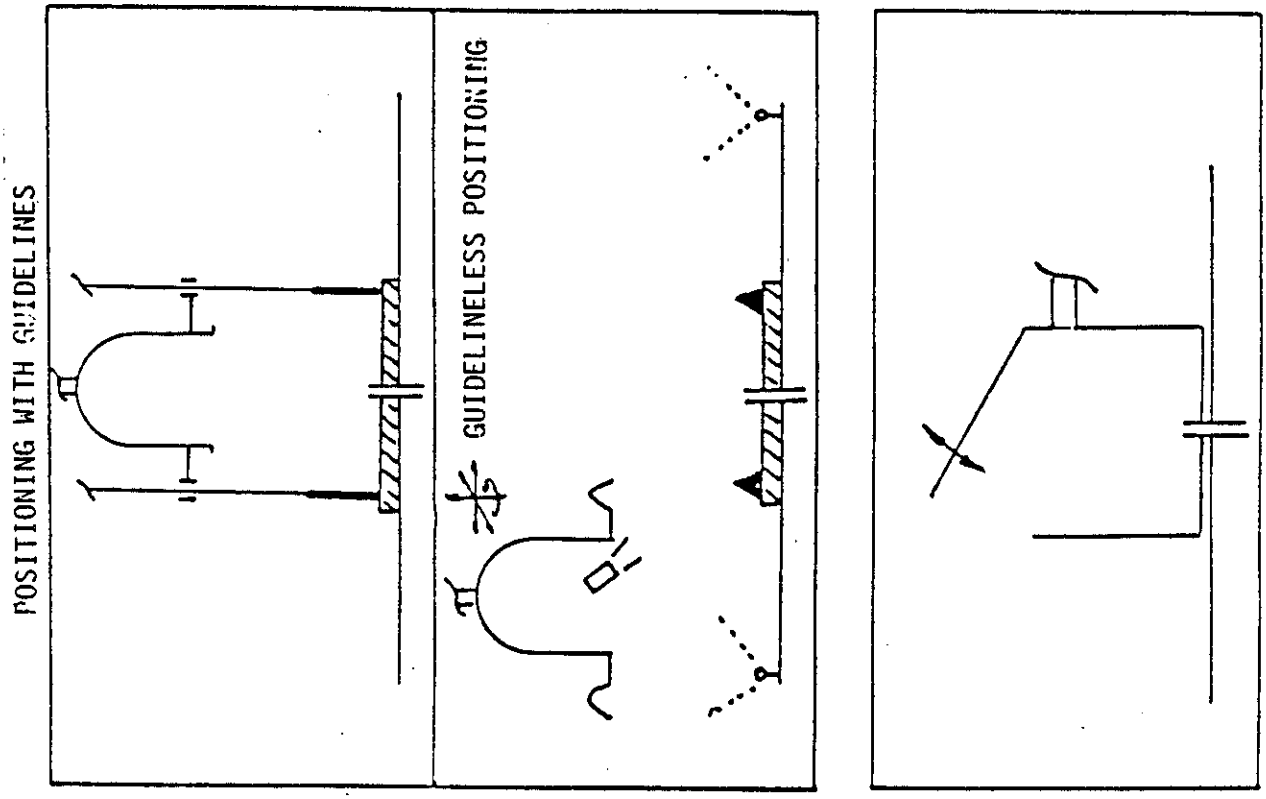

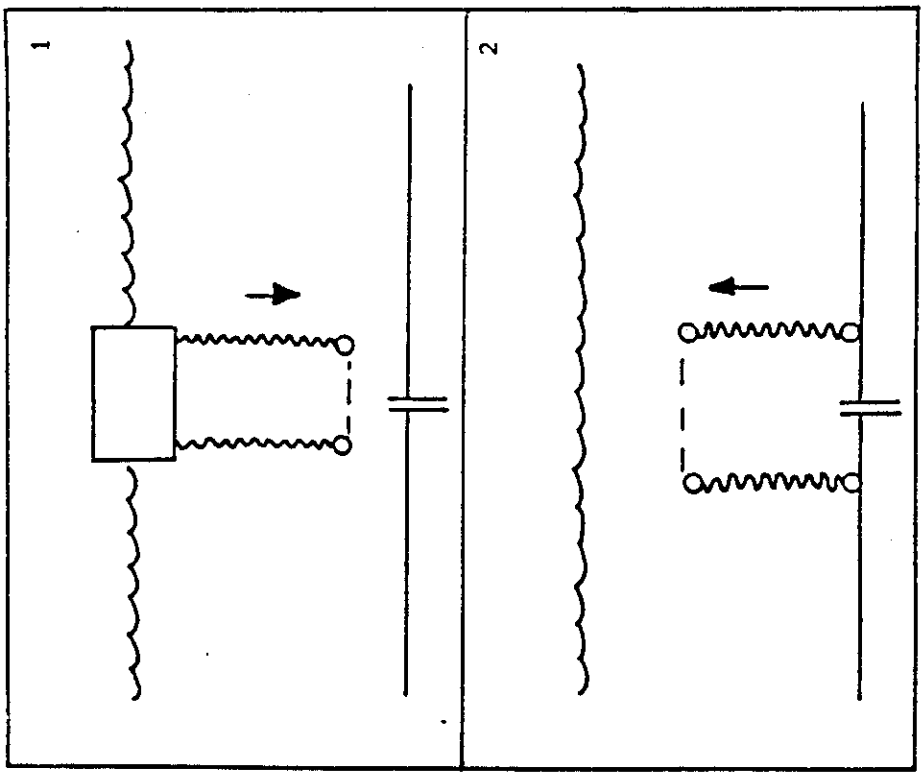

FLEXIBLE COLUMN FOR CONTAINMENT AT SPILL SOURCE

U.S. DEPARTMENT OF THE INTERIOR
MINERALS MANAGEMENT SERVICE

Brown & Root Development, Inc.
HOUSTON, TEXAS

SCALE: NONE	TITLE OF DRAWING: FLEXIBLE COLUMN AND POSITIONING CONCEPTS
DRAWN BY: E.H.S. DATE 8-15-85	
CHECKED BY: ANLS DATE 8-20-85	
APPROVED: GEP DATE 8-20-85	
CUSTOMER APPROVAL	CONTRACT NUMBER XC-0030
	DRAWING NUMBER FIGURE 2.3-43

STIFF COLUMNS FOR CONTAINMENT AT SPILL SOURCE

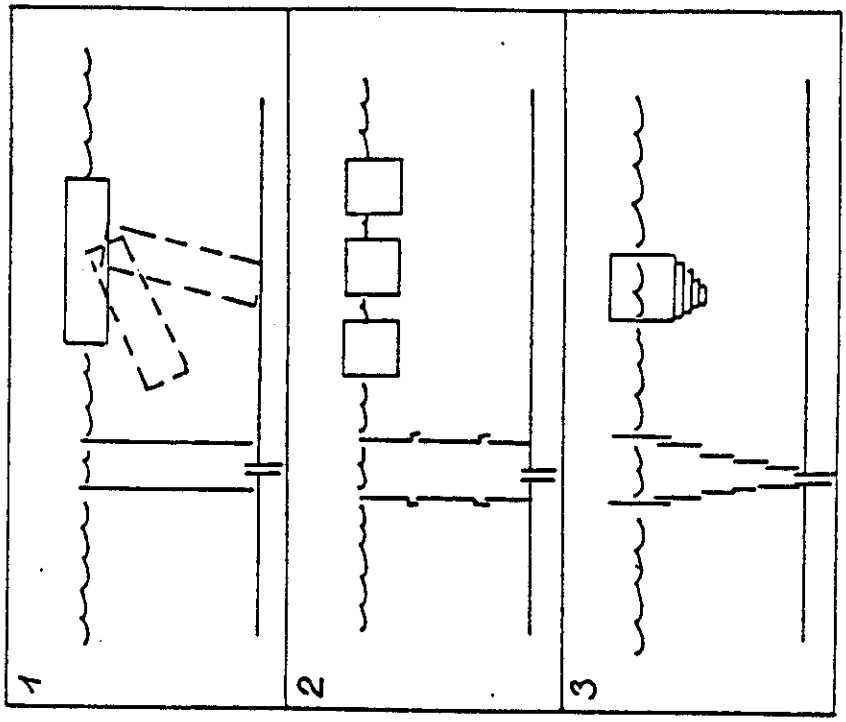

EXAMPLES OF METHODS SUGGESTED FOR CONTAINMENT IN THE PLUME

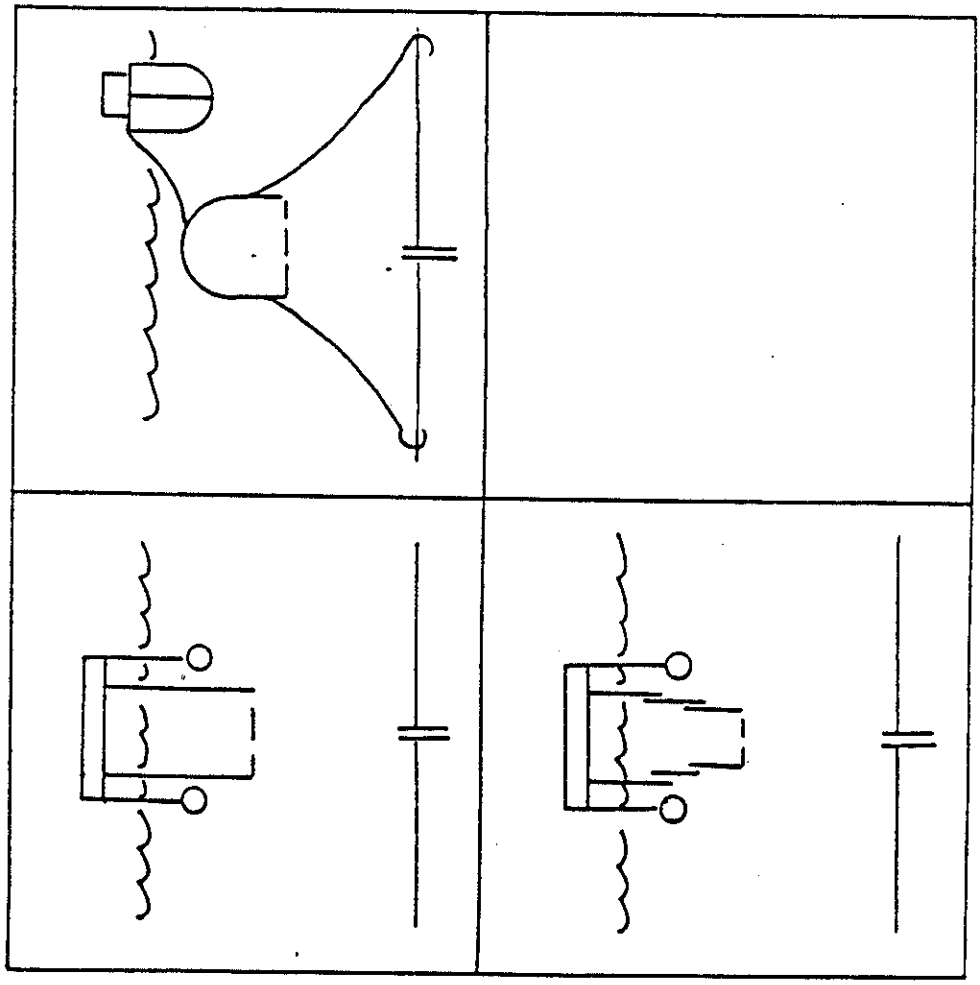

U.S. DEPARTMENT OF THE INTERIOR
MINERALS MANAGEMENT SERVICE

Brown & Root Development, Inc.
HOUSTON, TEXAS

SCALE: NONE	TITLE OF DRAWING: PRINCIPLES OF CONTAINMENT IN PLUME AND AT SOURCE
DRAWN BY: E.H.S. DATE 8-15-85	
CHECKED BY: ANLS DATE 8-20-85	
APPROVED: DATE 8-20-85	
CUSTOMER APPROVAL	CONTRACT NUMBER XC-0030 / DRAWING NUMBER FIGURE 2.3-44

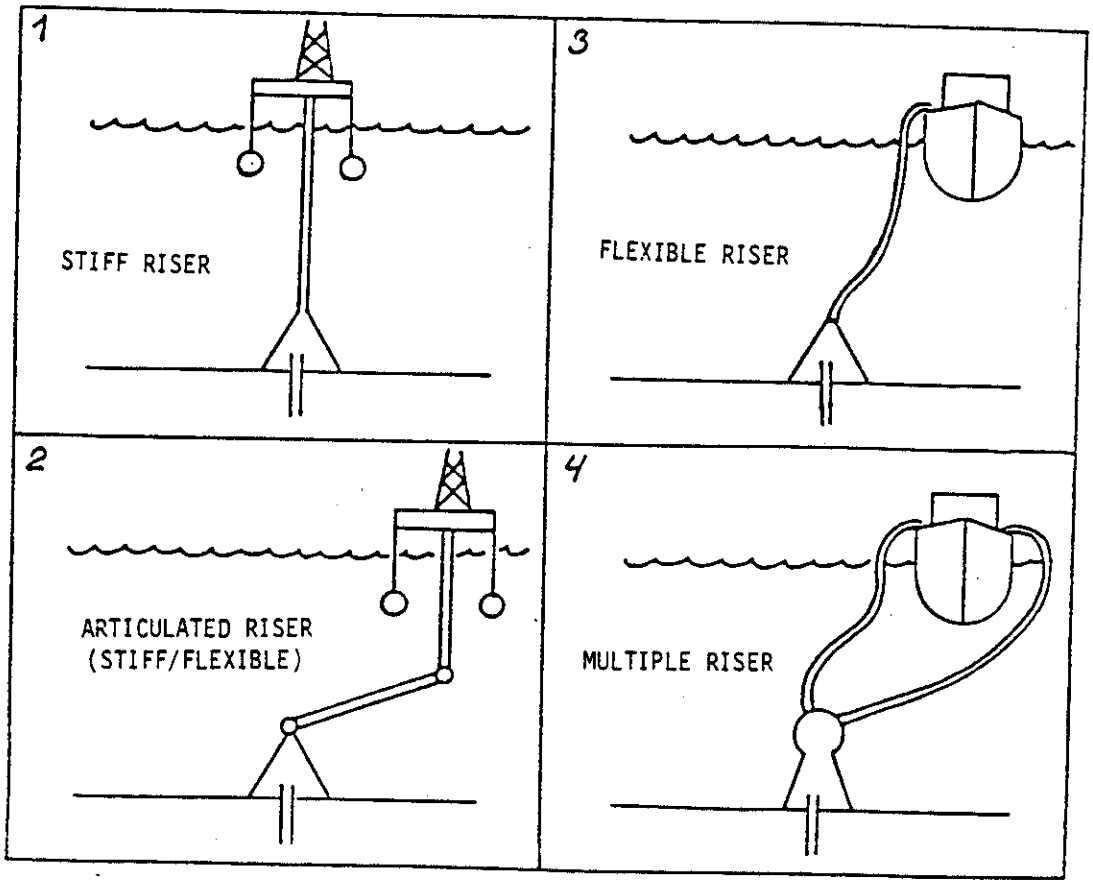

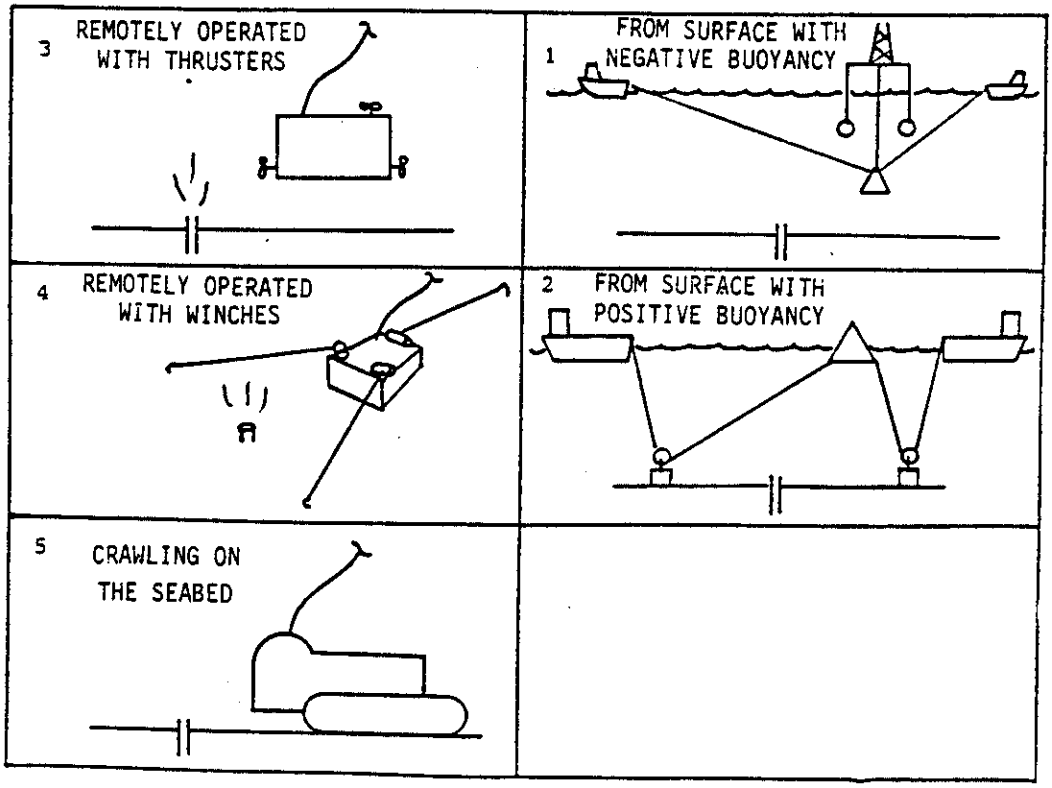

U.S. DEPARTMENT OF THE INTERIOR MINERALS MANAGEMENT SERVICE	SCALE: NONE	TITLE OF DRAWING:
	DRAWN BY: E.H.S DATE 8-15-85	RISER CONCEPTS AND INSTALLATION
Brown & Root Development, Inc. HOUSTON, TEXAS	CHECKED BY: ENLS DATE 8-20-85	PRINCIPLES
	APPROVED: DATE 8-20-85	
	CUSTOMER APPROVAL	CONTRACT NUMBER XC-0030 / DRAWING NUMBER FIGURE 2.3-45

SURFACE CONTAINMENT

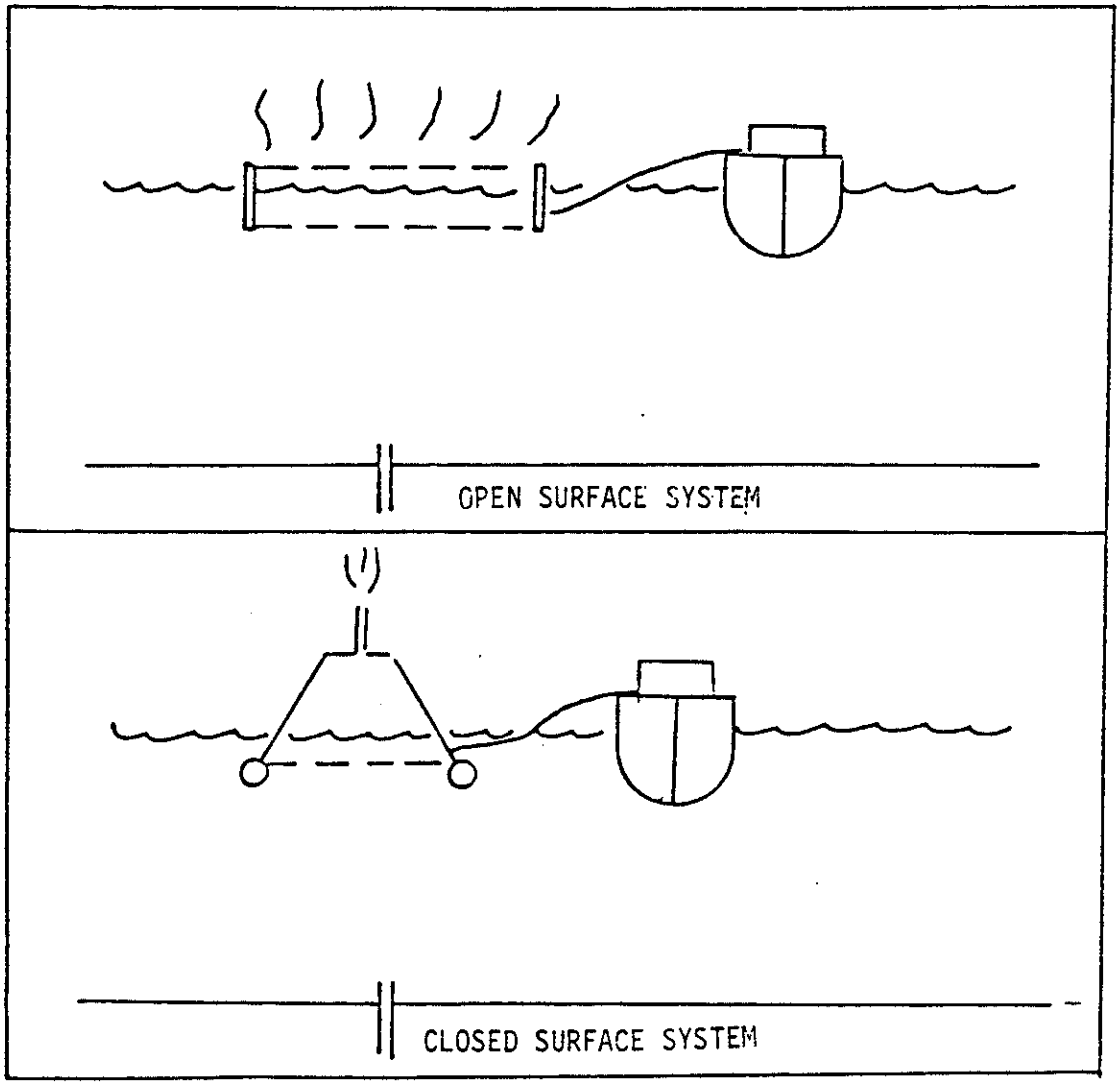

U.S. DEPARTMENT OF THE INTERIOR MINERALS MANAGEMENT SERVICE	SCALE: NONE		TITLE OF DRAWING: SURFACE CONTAINMENT
Brown & Root Development, Inc. HOUSTON, TEXAS	DRAWN BY: E.H.S. DATE: 8-15-85		
	CHECKED BY: ANLS DATE: 8-20-85		
	APPROVED: EEP DATE: 8-20-85		
	CUSTOMER APPROVAL	CONTRACT NUMBER XC-0030	DRAWING NUMBER FIGURE 2.3-46

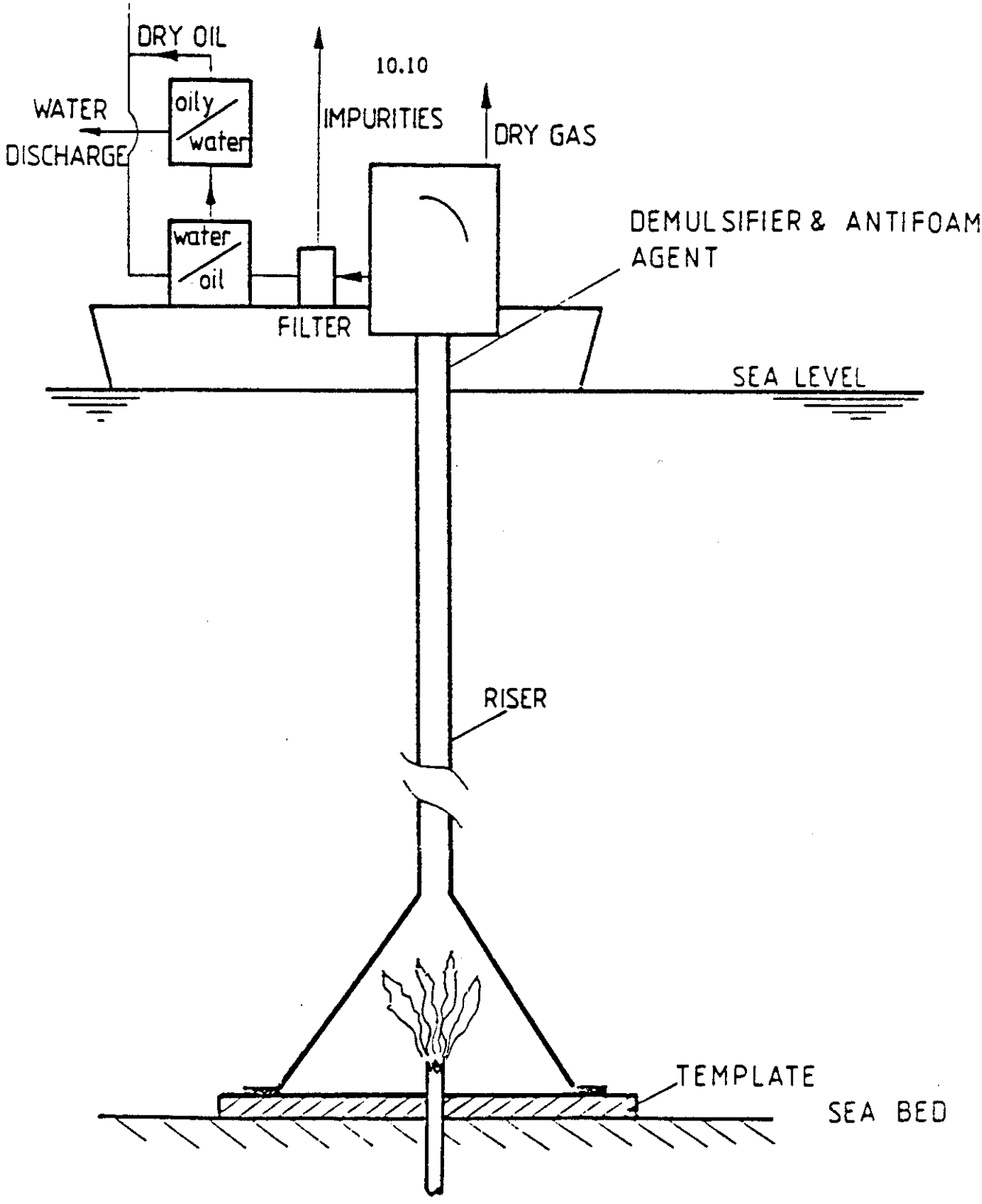

U.S. DEPARTMENT OF THE INTERIOR
MINERALS MANAGEMENT SERVICE

Brown & Root Development, Inc.
HOUSTON, TEXAS

SCALE: NONE	TITLE OF DRAWING:
DRAWN BY: E.H.S. DATE 8-15-85	CLOSED SYSTEM AT SPILL SOURCE
CHECKED BY: ANLS DATE 8-20-85	WITH SURFACE SEPARATION
APPROVED: EEP DATE 8-20-85	
CUSTOMER APPROVAL	CONTRACT NUMBER XC-0030 / DRAWING NUMBER FIGURE 2.3-47

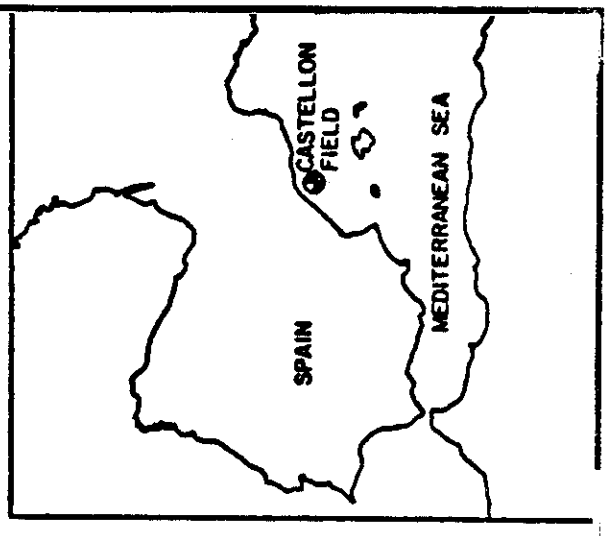

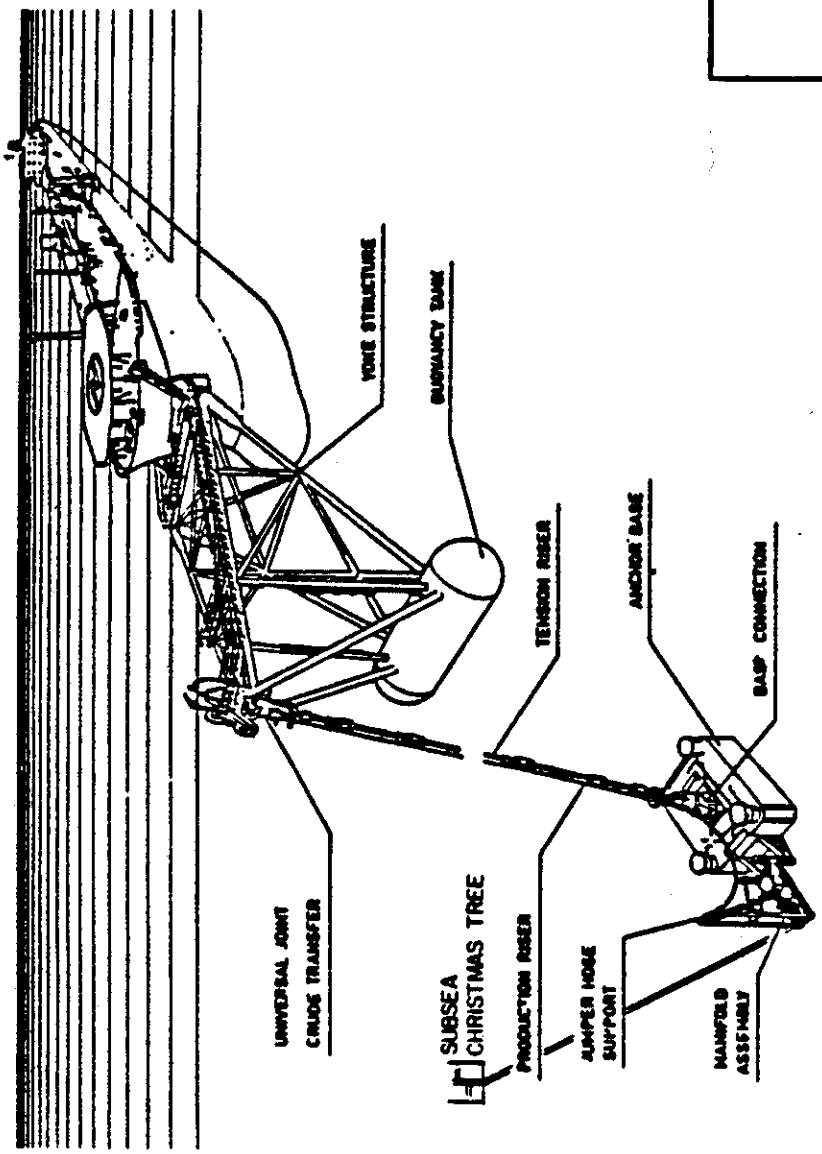

CASTELLON

U.S. DEPARTMENT OF THE INTERIOR MINERALS MANAGEMENT SERVICE	SCALE: NONE	TITLE OF DRAWING: FLOATING PRODUCTION SYSTEM
Brown & Root Development, Inc. HOUSTON, TEXAS	DRAWN BY: E.H.S. DATE 8-15-85	
	CHECKED BY: LNLS DATE 8-20-85	
	APPROVED: EEB DATE 8-20-85	
	CUSTOMER APPROVAL	CONTRACT NUMBER XC-0030 / DRAWING NUMBER FIGURE 2.5-2

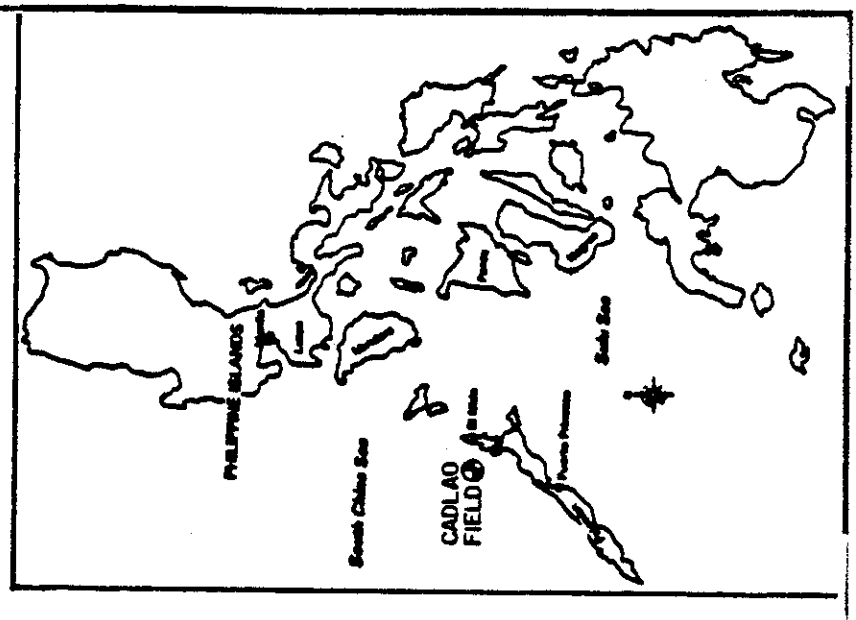

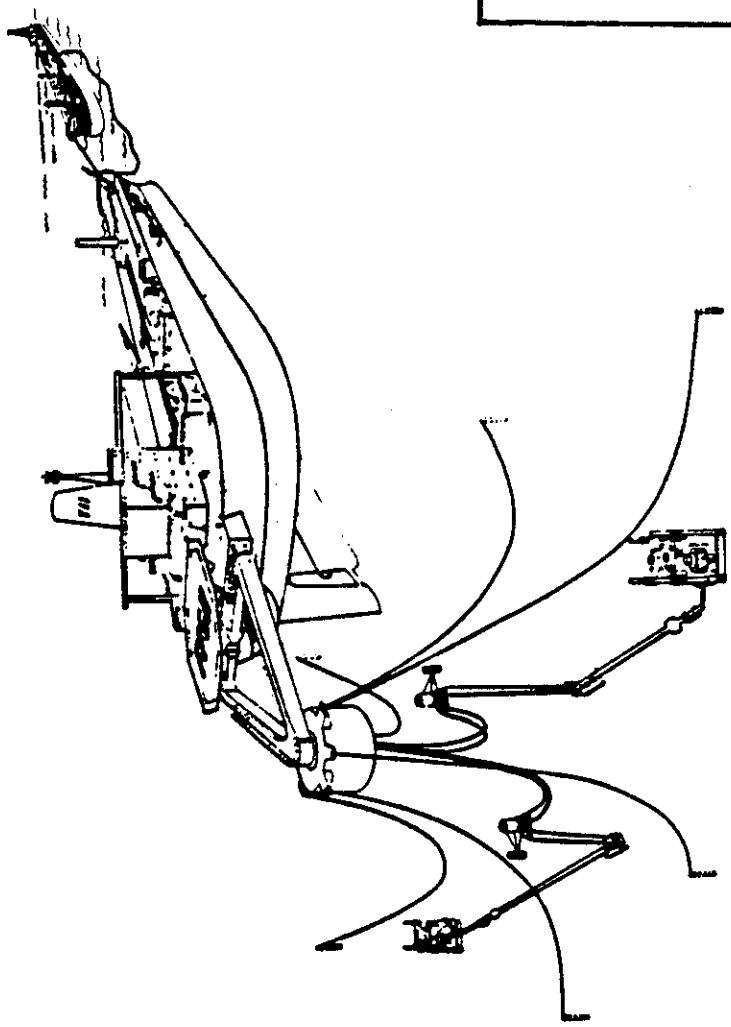

CADLAO

U.S. DEPARTMENT OF THE INTERIOR
MINERALS MANAGEMENT SERVICE

Brown & Root Development, Inc.
HOUSTON, TEXAS

SCALE: NONE	TITLE OF DRAWING: FLOATING PRODUCTION SYSTEM
DRAWN BY: A. FOX — DATE: 8-9-85	
CHECKED BY: ANLS — DATE: 8-20-85	
APPROVED: EGF — DATE: 8-20-85	
CUSTOMER APPROVAL	CONTRACT NUMBER: XC-0030 — DRAWING NUMBER: FIGURE 2.5-3

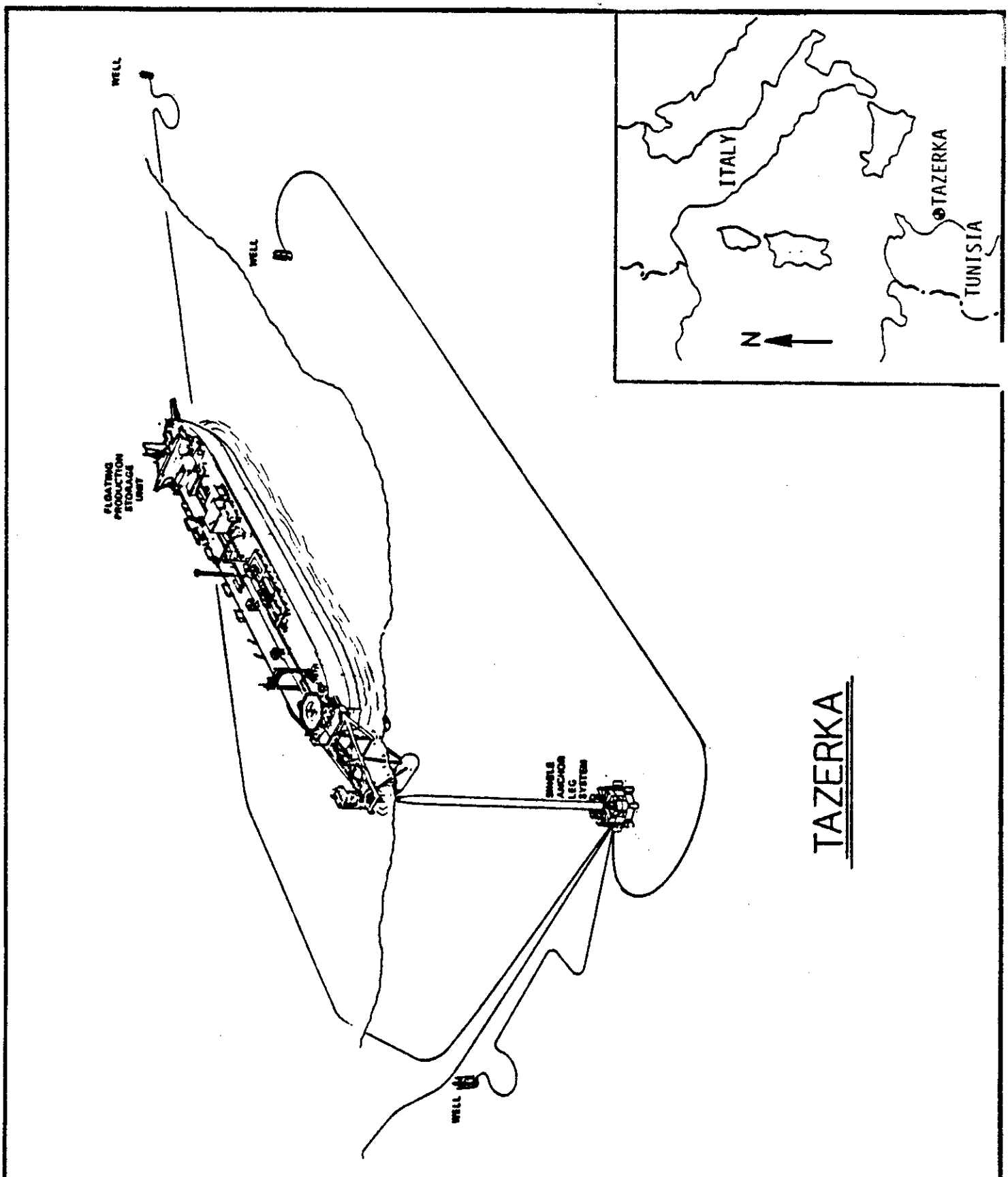

U.S. DEPARTMENT OF THE INTERIOR
MINERALS MANAGEMENT SERVICE

Brown & Root Development, Inc.
HOUSTON, TEXAS

SCALE: NONE	TITLE OF DRAWING: FLOATING PRODUCTION SYSTEM
DRAWN BY: A. FOX — DATE: 8-7-85	
CHECKED BY: ANLS — DATE: 8-20-85	
APPROVED: [illegible] — DATE: 8-20-85	
CUSTOMER APPROVAL	CONTRACT NUMBER: XC-0030 — DRAWING NUMBER: FIGURE 2.5-4

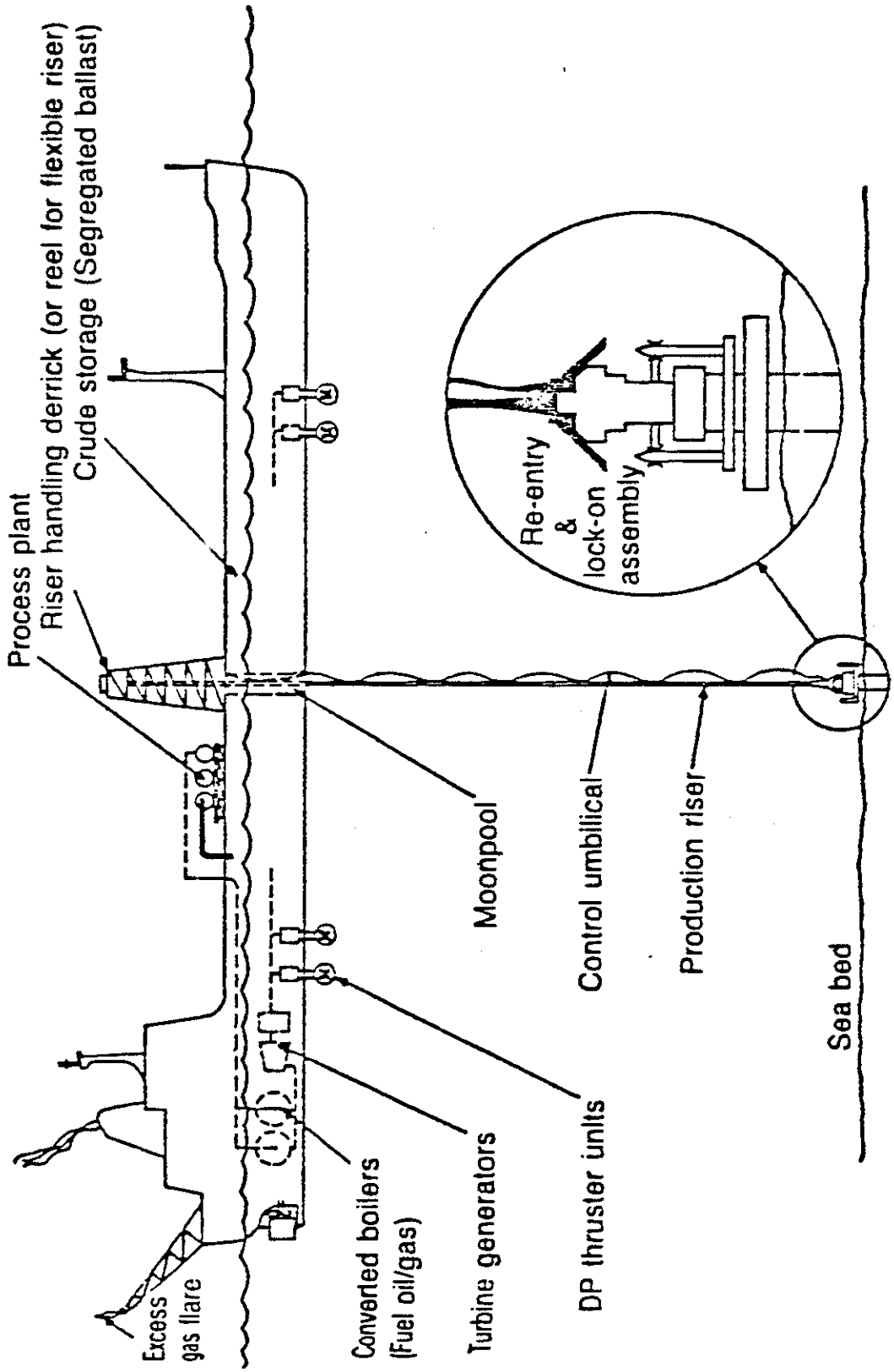

U.S. DEPARTMENT OF THE INTERIOR
MINERALS MANAGEMENT SERVICE

Brown & Root Development, Inc.
HOUSTON, TEXAS

SCALE: NONE	TITLE OF DRAWING: FLOATING PRODUCTION SYSTEM
DRAWN BY: A. FOX DATE 8-7-85	
CHECKED BY: ANLS DATE 8-16-85	
APPROVED: EEO DATE 8-20-85	
CUSTOMER APPROVAL	CONTRACT NUMBER XC-0030 / DRAWING NUMBER FIGURE 2.5-5